No. 842,942. PATENTED FEB. 5, 1907.

W. G. CLARK.

WIRE INSULATOR.

APPLICATION FILED JAN. 29, 1906.

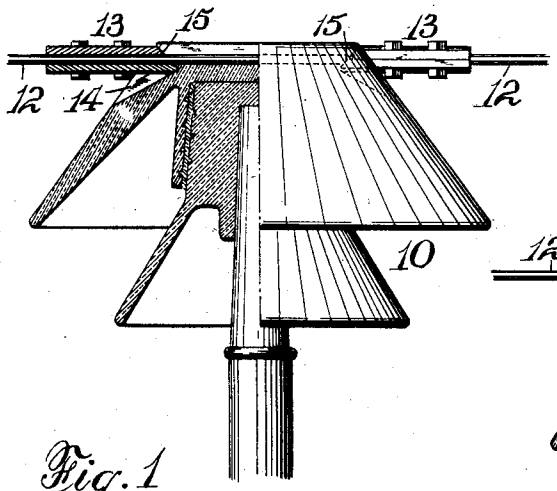

Fig. 1

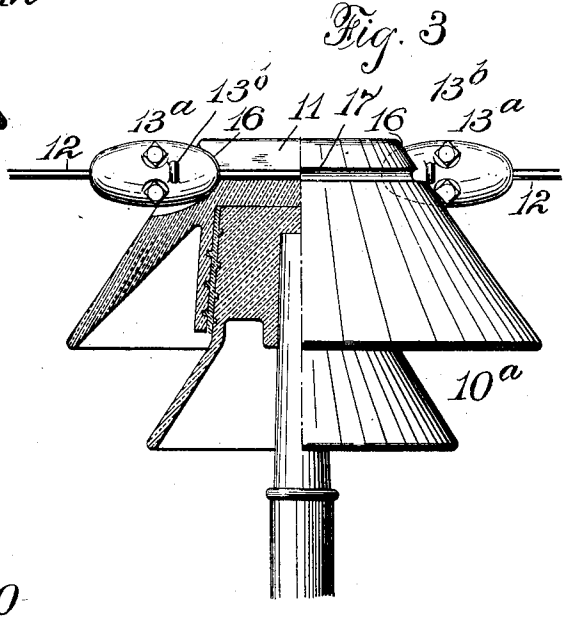

Fig. 3

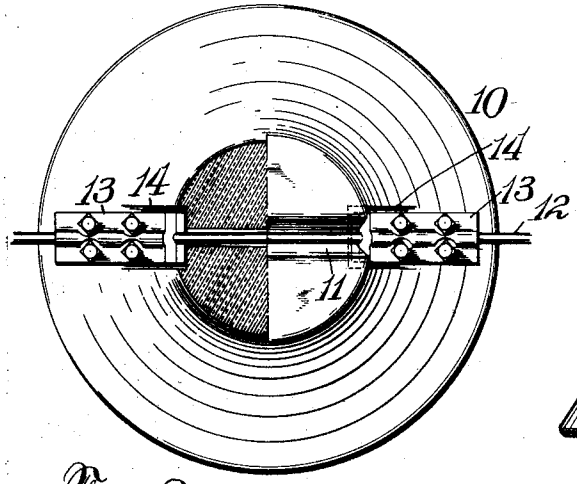

Fig. 2

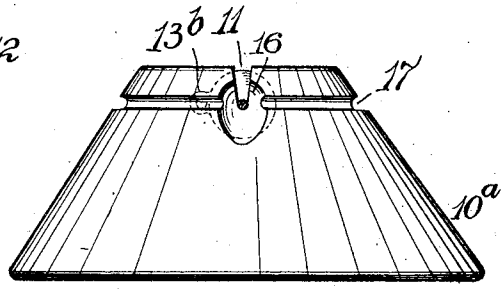

Fig. 4

WITNESSES:

Wm. H. Campfield.

Frank L. Stubbs.

INVENTOR.

Walter G. Clark.

BY

W. B. Hutchinson,

ATTORNEY.

UNITED STATES PATENT OFFICE.

WALTER G. CLARK, OF NEW YORK, N. Y.

WIRE-INSULATOR.

No. 842,942. Specification of Letters Patent. Patented Feb. 5, 1907.

Application filed January 29, 1906. Serial No. 298,554.

To all whom it may concern:

Be it known that I, WALTER G. CLARK, of the city, county, and State of New York, have invented a new and useful Improvement in Wire-Insulators, of which the following is a full, clear, and exact description.

My invention relates to improvements in insulators such as are used for supporting and insulating electric wires.

The invention is especially intended for use in connection with insulators and with wire-clamps which are fastened to the wire and fit against the insulator, so that no tying is necessary and in such a way that when the clamps are adjusted the wires are held in place by their own tension and are also held securely against the insulator. In carrying out this idea I produce in the sides of the insulators sockets which are opposite but may be continuous or annular and which are constructed so that the walls, and especially the upper walls, of the sockets engage the clamps and prevent their displacement. In consonance with this idea the sockets and the retaining-clamps can be constructed so that the wires shall be held rigidly or so that the wires can have a certain freedom of movement laterally, if preferred. The arrangement, it will be noticed from the description which follows, is such as to permit the wires to be stretched with great facility and nicety without any tying means except that of the clamps and at the same time the wires are securely held to the insulators, which latter may, in a general way, be of any usual or preferred type.

With these ends in view my invention consists of an improved insulator and the combination of the insulator and wire-clamp, which arrangement will be hereinafter fully described and the novel features claimed.

Reference is to be had to the accompanying drawings, forming a part of this specification, in which similar letters and figures of reference indicate corresponding parts in all the views.

Figure 1 is a view, partly in side elevation and partly in vertical section, of an insulator and clamps, showing my improvement. Fig. 2 is a plan view, partly in horizontal section, of the structure shown in Fig. 1. Fig. 3 is a view, partly in side elevation and partly in vertical section, of an insulator, showing a slightly-modified form of the invention; and Fig. 4 is a side elevation of the insulator shown in Fig. 3 with the wire in section.

The insulator 10 may be of the usual or of any preferred construction, and I have shown an ordinary petticoat type of insulator which is provided with a wire-groove 11 across the top, this being common to insulators of this type. The groove is to receive the line-wire 12, and the wire is provided with clamps 13, which can be of any approved kind, but which, as shown, have their inner ends beveled, so as to fit in the sockets 14 of the insulator, which sockets are placed diametrically opposite and coincident with the ends of the groove 11, the sockets having their upper walls beveled, as shown at 15, so as to fit snugly and flatly against the corresponding beveled ends of the clamps 13. If desired, the insulator 10 can have the usual annular groove around the top; but I have not shown it in Fig. 1, and it will also be understood that the socket 14 can be annular—that is, can be carried entirely around the insulator; but I prefer for certain purposes to use it as shown in Figs. 1 and 2, where the two sockets are placed diametrically opposite and in line with the groove 11. When this arrangement is used, the wire is stretched through the groove 11, and the clamps 13 are put in position upon the wire, forced up snugly into the sockets 14, and fastened. Thus it will be seen the wire is securely held in place, and it is also rigidly held, as the ends of the clamps fit snugly in the sockets.

In Figs. 3 and 4 I have shown a construction which is similar in principle to that set out above, but which is intended to provide a greater freedom of action for the wires, so as to permit them to have a greater swaying movement, and in some places this is desirable. As here shown, the insulator 10^a, which, as above stated, can be of any form, has the wire-groove 11 and has also the sockets on the sides and near the top; but, as shown, the sockets are in the form of concave recesses 16, which are adapted to receive the ends of the clamps 13^a. These clamps have ball-like end portions and can be otherwise of any approved kind; but as the ends fit closely in the recesses 16 they form, in effect, and in combination with the insulator, ball-joints, which permit the wires 12 to sway freely in any direction, but without straining the insulator. The clamps 13^a can be provided with loops 13^b on the side, which should aline with the wire-groove 17 near the top of the insulator, and tie-wires can be passed through the loops and around the groove, if desired,

to relieve the strain from the wires 12 and limit the movement of the clamps 13a.

From the foregoing description it will be readily understood that the form of opposed sockets on the insulator can be changed in many ways and that the form of the wire-clamps can be correspondingly changed, but that the essential thing is to have opposed sockets or recesses on the insulator, which will serve to hold the wire-clamps, and consequently the wires, in place and which will permit the wire to span the top of the insulator. I therefore do not limit myself to any particular form of socket, insulator, or c amp, but claim, broadly, the combination of insulator, wire, and clamp which will permit the arrangement described to be carried out.

In practice it is desirable to have the sockets 14 or 16 produced so that the wire 12 will run straight through the clamps and through the groove 11; but obviously the sockets might be a little lower without affecting the principle of the invention to compensate for sag of wire in span.

Having thus fully described my invention, I claim as new and desire to secure by Letters Patent—

1. The combination with an insulator having an overhanging upper edge, of wire-clamps adapted to be secured to a wire and engage the insulator beneath the said overhang.

2. A structure such as described comprising an insulator with a top groove and with overhanging edges adjacent to the groove ends in combination with wire-clamps to engage a wire and fit beneath the aforesaid overhang.

3. An insulator having a top groove and sockets in the outer sides, at the ends of and in alinement with the groove.

4. The combination with an insulator having peripheral overhanging or projecting edges, of ball-like clamps to engage a wire and fit beneath the said overhang.

5. The combination with an insulator having a grooved top and ball-sockets at the ends of the grooves, and on the outer sides of the insulator, of ball-like wire-clamps to engage a wire and fit in the aforesaid sockets.

6. The combination with an insulator constructed to receive a wire, and having sockets on its outer sides, of clamps constructed to fit bodily over a wire, and form abutments to enter the aforesaid sockets.

7. The combination with an insulator having ball-like sockets in its outer sides, of ball-like clamps adapted to fit bodily over a wire and enter the aforesaid sockets.

WALTER G. CLARK.

Witnesses:
WARREN B. HUTCHINSON,
WILLIS A. BARNES.