April 28, 1970 R. B. SCHRECONGOST ET AL 3,509,395

TONE SIGNAL GENERATOR

Filed Nov. 25, 1968 3 Sheets-Sheet 1

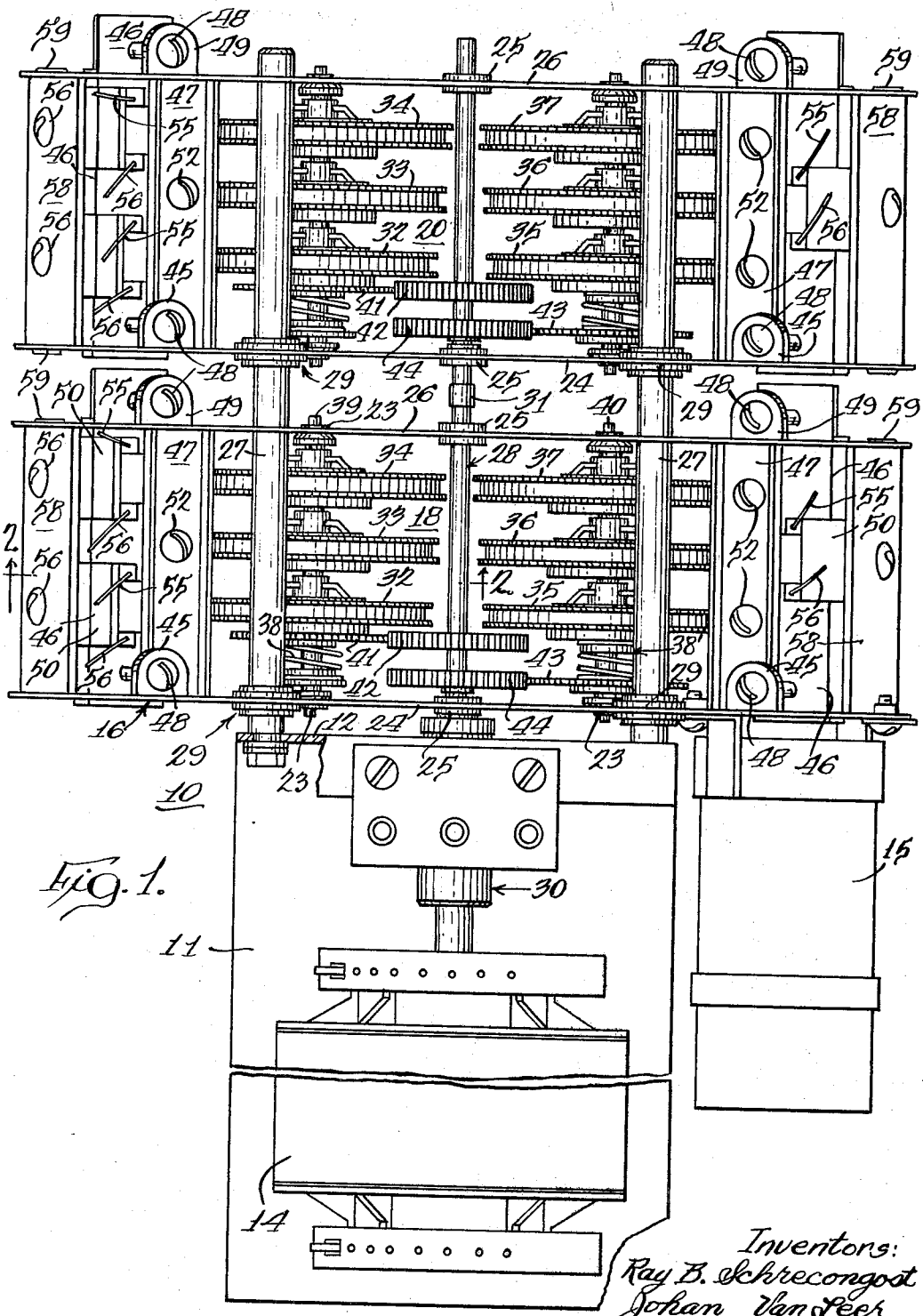

Fig. 1.

Inventors:
Ray B. Schrecongost
Johan Van Leer
By
Rudolph, Love, Rogers & Van Sciver
Attys

April 28, 1970 R. B. SCHRECONGOST ET AL 3,509,395

TONE SIGNAL GENERATOR

Filed Nov. 25, 1968 3 Sheets-Sheet 2

Fig. 2.

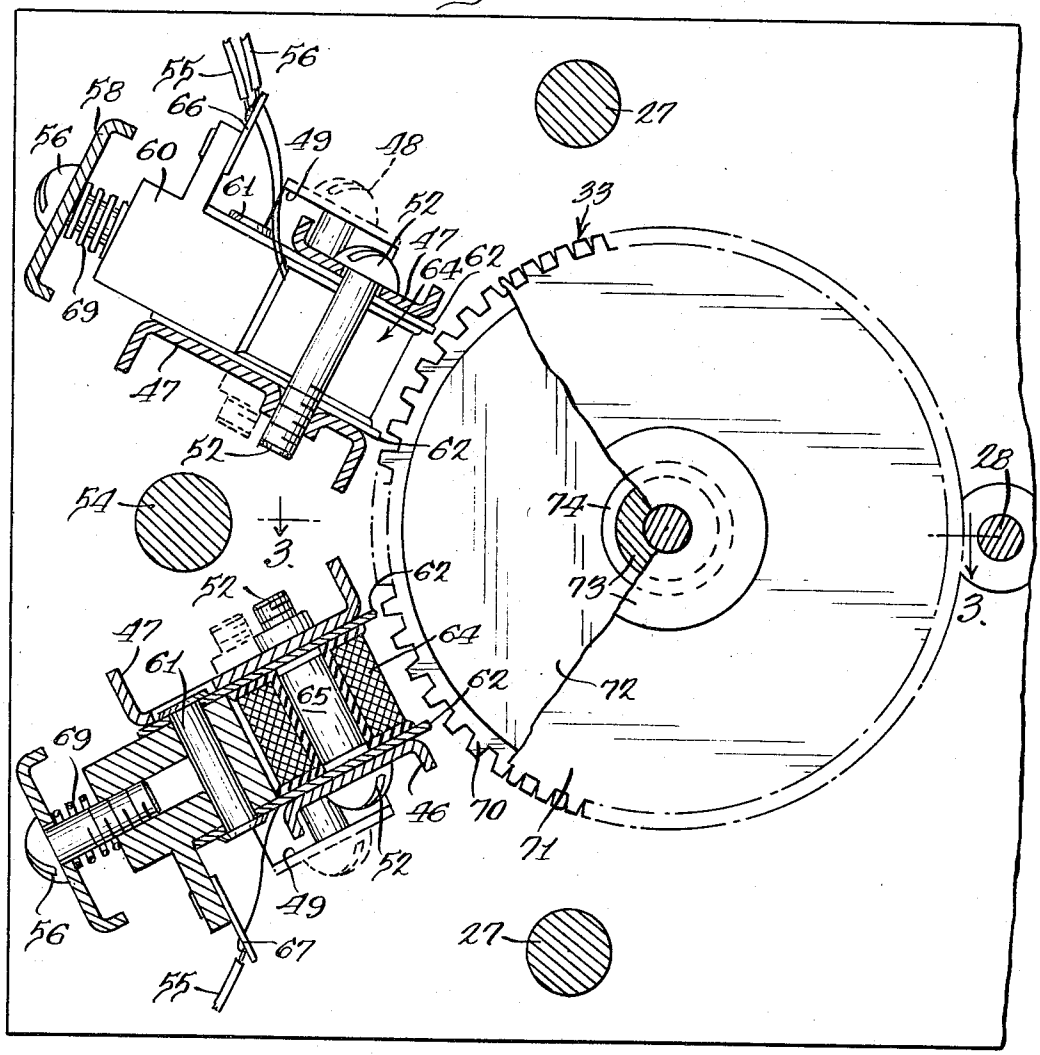

Fig. 3.

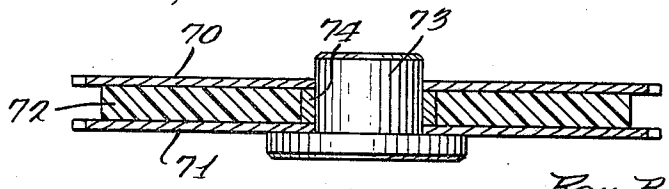

Inventors:
Ray B. Schrecongost
Johan Van Leer
By
Strado Gpk. Love, Rogers & Van Saiver
Attys

April 28, 1970 R. B. SCHRECONGOST ET AL 3,509,395

TONE SIGNAL GENERATOR

Filed Nov. 25, 1968 3 Sheets-Sheet 3

Fig. 4.

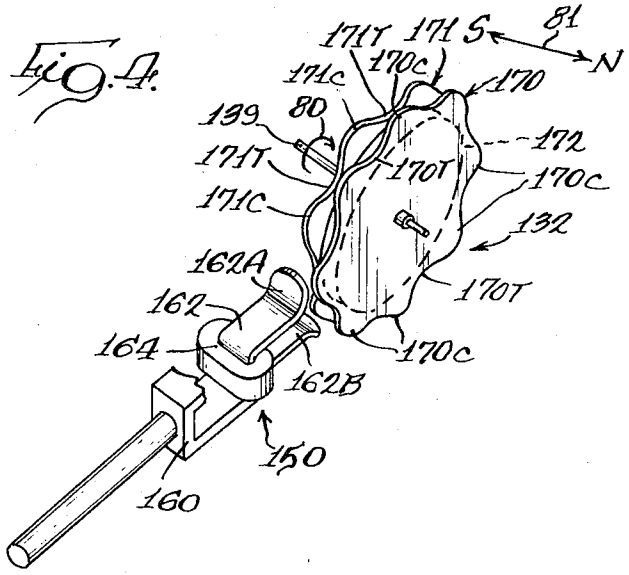

Fig. 5.

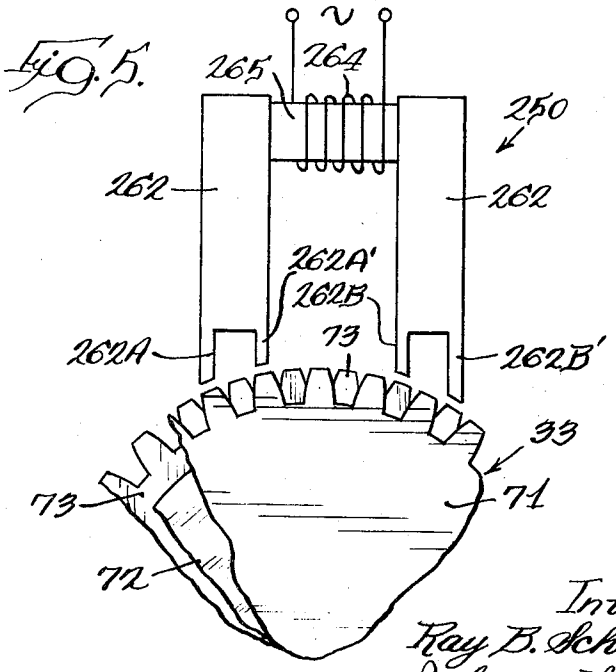

Inventors:
Ray B. Schrecongost
By Johan VanLeer
Rudolph, Love, Rogers & VanSciver
Atty's

United States Patent Office 3,509,395
Patented Apr. 28, 1970

3,509,395

TONE SIGNAL GENERATOR

Ray B. Schrecongost, Park Ridge, and Johan van Leer, Chicago, Ill., assignors to Hammond Corporation, Chicago, Ill., a corporation of Delaware

Filed Nov. 25, 1968, Ser. No. 778,632
Int. Cl. H02k 17/42
U.S. Cl. 310—168 12 Claims

ABSTRACT OF THE DISCLOSURE

A tone signal generator for an electronic organ or similar musical instrument is disclosed. The generator develops a full octave of twelve fundamental notes employing twelve tone wheels each of similar construction, one wheel for each signal frequency. The various wheels are rotated at constant speeds and each forms part of a magnetic circuit which includes a pickup head and coil mounted stationarily adjacent to each wheel. Each wheel comprises a pair of spaced metal discs with scalloped or serrated edges and a disc-shaped plastic permanent magnet sandwiched between the discs. The edges of the metal discs of the wheel are aligned so that the serrations are staggered from one another in relation to a pair of pole pieces of the pickup head. The generator thus may develop tone signals in the pickup coils that are alternating current in nature and can be of a sufficient magnitude as to be employed without amplification in successive components of the musical instrument.

The generator is so constructed that identical pickup heads may be employed at each tone wheel despite varying numbers of serrations. Also disclosed is an alternative construction for the pickup head which has the advantage of developing higher amplitude signal outputs.

BACKGROUND OF THE INVENTION

Field of the invention

The present invention is directed toward a new and improved tone signal generator for electrical tone signal generation for musical instruments.

DESCRIPTION OF THE PRIOR ART

One of the basic types of tone signal generating systems used in electric organs and similar musical instruments is illustrated in the patent to Laurens Hammond No. 1,956,350. The arrangement is to provide a synchronous electric motor to drive a plurality of rotating serrated discs, in this art usually referred to as tone wheels, one for each frequency, in close proximity to permanent magnet pole pieces having pickup coils. The tone wheels form portions of magnetic circuits with the pole pieces and thus their rotation generates an alternating current in each pickup coil at the desired frequency. The frequency generated in each coil depends upon motor speed, the gear ratio of the drive from the motor to the particular tone wheel, and the number of serrations around the periphery of the wheel.

In the particular organization of the above-mentioned Hammond patent, there is a tone wheel for each fundamental tone signal required in the instrument and some extra wheels which supply upper harmonic structure above the fundamental limits of the keyboard.

Another system which makes use of rotating wheel type generators is illustrated in the patent application of William B. Ayres, Ser. No. 560,217, filed June 24, 1966. In this system a group of twelve tone wheel generators supplies all of the signals for the top octave only of the desired group of signals, and the signals of lower frequency are obtained from these originally generated signals by means of cascaded frequency divider circuits.

A tone signal generator of the same general type as the present invention is also disclosed in the pending application for United States Letters Patent of Lyman J. Haviland and Herbert E. Meinema, entitled Tone Signal Generator, which was filed on Mar. 24, 1967, assigned Ser. No. 625,670 and is assigned to the same assignee as the present invention.

All presently known tone wheel type musical signal generators, including those discussed above, use tone wheels which are comprised of a single wheel or disc for each frequency.

SUMMARY OF THE INVENTION

A musical tone signal generator constructed in accordance with the present invention comprises means for rotating at a preselected constant radial velocity, a tone wheel which comprises a pair of serrated edge discs with a permanently magnetic disc sandwiched between the pair of discs and a pickup head mounted adjacent to the edges of the serrated discs from which an alternating electric tone signal of a predetermined fundamental frequency is derived.

Another advantage of the invention is that it readily lends itself to generation of electrical tone signals of superior amplitude, thereby eliminating the need for certain special amplifiers ordinarily required.

BRIEF DESCRIPTION OF THE DRAWING

The features of the present invention which are believed to be novel are set forth with particularity in the appended claims. The invention, together with further objects and advantages thereof, may best be understood by reference to the following description taken in connection with the accompanying drawings, in the several figures of which like reference numerals identify like elements, and in which:

FIG. 1 is a diagrammatic plan view, partly broken away, of a tone signal generator constructed in accordance with the present invention;

FIG. 2 is a fragmentary transverse sectional view of the tone generator of FIG. 1 in greater detail substantially as seen along the line **2—2** in that figure;

FIG. 3 is an enlarged sectional view of one part, a tone wheel, of the tone signal generator of FIGS. 1 and 2 substantially as seen from the line **3—3** of FIG. 2;

FIG. 4 is a perspective view with parts broken away of a portion of a simplified tone generator similar in principle to the generator shown in FIGS. 1–3, which is useful in illustrating the basic operation of the invention; and

FIG. 5 is a fragmentary view of a portion of another generator constructed in accordance with the present invention illustrating an alternate construction of one part thereof, a pickup head assembly.

DESCRIPTION OF THE PREFERRED EMBODIMENTS

Referring to FIG. 1 there is depicted a tone signal generator which is generally designated by the numeral **10**. The tone signal generator **10** is of the type that may be employed in an electrical musical instrument, such as an electrical organ, as a primary source for the tone signals which are ultimately audibly reproduced. The generator **10** develops twelve different fundamental musical tone signals comprising one octave of the conventional musical scale.

The full octave tone signal generator **10** includes a motor plate or base **11** upon which is mounted a synchronous electric motor **14**. Adjacent to the base **11** and to the motor **14** is a tone signal generator module generally indicated by the numeral **16**. The module **16** is affixed to an upstanding planar generally square wall **12** which is

affixed to and rises from the base **11**. The generator module **16** is made up of two essentially similar submodules **18** and **20**. Each of these comprises similar parts interconnected in essentially the same manner. As such, only the submodule **18** will be described in detail it being understood that the construction and operation of the submodule **20** is essentially the same. Also, in general similar numerals will be employed to identify similar parts in both submodules **18** and **20**.

Each of the submodules **18** and **20** includes a pair of parallel spaced mounting plates **24** and **26**. The two modules **18** and **20** are affixed to the wall **12** by means of four mounting rods or support shafts, such as the shafts **27** which pass perpendicularly through the mounting plates **24** and **26**. These shafts **27** are distributed about the wall **12** at its corners and run perpendicularly through the parallel mounting plates **24** and **26** and are affixed to the plates **24** which face the wall **12** of each submodule **18** and **20** by a washer-retaining ring assembly **29**. The forward plate **24** of submodule **18** is adjacent to the wall **12** and serves as a convenient mounting place for a capacitor **15** for the synchronous motor **14**.

Each of the plates **24** and **26** is provided with bearings **25** which journal a main drive shaft **28**. The shaft **28** may be formed in sections, one section per submodule, which are joined together as by a coupler **31**.

This construction allows each submodule such as **18** or **20** to be standardized as much as possible and allows for additional submodules, if desired, to be joined to the generator **10**.

One end of the drive shaft **28** is connected through a flexible coupling **30** to the shaft of the motor **14**. The flexible coupling **30** allows the shaft **28** to be driven at the motor speed, but avoids alignment problems, and, at least to some extent, pulsations in the motor shaft speed are thereby absorbed in the flexible coupling **30**.

Six tone wheels **32, 33, 34, 35, 36** and **37** are mounted within the submodule **18**, three each upon two shafts **39** and **40** parallel to the drive shaft **28**, and are driven through gear trains from the main drive shaft **28**. The wheel shafts **39** and **40** are each mounted for rotation at their extreme ends in bearings **23** formed in the plates **24** and **26**. The shaft **39** is driven from a gear **41** which is affixed thereto and meshes with a driven gear **42** affixed to the main shaft **28**. Similarly the shaft **40** is driven from a gear **43** which meshes with a gear **44** affixed to the main shaft **28**. These gear trains **41–42** and **43–44** drive the shafts **39** and **40** at differing angular velocities. The shafts **39** and **40** are frictionally driven respectively by the gears **41** and **43** (which are rotatably mounted thereon), by means of coil springs **38** and **38'**, respectively, which press the gears into frictional engagement with collars or hubs on the shafts.

It should be here noted that the gear ratios of the second submodule **20** are preferably different from those of the submodule **18** so that the wheel shafts of that module are driven at yet different angular velocities from those of the wheel shafts of submodule **18**. One preferred relationship of the gearing will be described in more detail later.

The tone wheels **32–37** are freely and rotatably mounted on their respective shafts **39** or **40** and affixed thereto by flexible couplings, which together with the flexible coupling or spring **38** which drives the shafts **39** and **40** and the flexible coupling **30**, greatly reduce variations in angular speed and minimize problems of alignment.

Mounted outward from each of the tone wheels **32–37** is a pickup head assembly **50**. These assemblies **50**, which are best shown in FIG. 2, are mounted between a pair of transverse brackets, which extend between the plates **24** and **26**. These brackets include a large channel bracket **46** and an L-shaped bracket **47** which are generally aligned parallel to an extension of a radius of the tone wheels **32–37**. Two sets of the brackets **46** and **47** are provided on each side of the submodule **18** spaced equal distances above and below the central horizontal plane through the submodule. The upper bracket pair **46–47** on the left side has two pickup head assemblies **50**, adjacent to the outer wheels **32** and **34**, while the lower bracket pair has a single assembly **50** for the center wheel **33**. On the other side of the submodule **18**, as shown in FIG. 1, the arrangement is reversed with the assemblies **50** for the outer wheels **35** and **37** being positioned between the lower bracket pair **46–47** and the assembly **50** for the center wheels **36** being held by the upper bracket pair **46–47**.

The large channel brackets **46** of both the upper and lower pair of brackets are each positioned to face and be adjacent to the central horizontal plane of the submodule **18**. Each of the large channel brackets **46** is held and affixed at each of its extreme ends to the plates **24** and **26** by means of a nut and bolt assembly **48** whose bolt head passes through one of a pair of outstanding tabs **45** or **49**. The tab **45** projects inward from the plate **24** at a right angle thereto and is preferably unitarily formed therefrom. The tab **49** projects upwardly from the plate **26** and is similarly so formed.

The large channel bracket **46** preferably has a rearward extension that passes out of the plate **26**, through a hole formed therein, and that receives the nut and bolt assembly **48**. The hole in the plate **26** preferably allows considerable travel clearance for the large channel bracket **46** so that it may be precisely positioned by the tightening or loosening of the nut and bolt assembly **48**.

The smaller channel brackets **47** are secured to the large bracket **46** by means of one or two screw assemblies **52**. When the bracket pair **46–47** encases two pickup head assemblies **50** a single screw assembly **52**, positioned between them, is employed. When a single pickup head assembly is captivated then a pair of screw and nut assemblies **52** are employed, one on either side of the pickup head **50**.

The plates **24** and **26** may be secured together by means of a pair of horizontal mounting rods **54**, (FIG. 2) one on either side of the submodule **18** or **20** at the horizontal central plane therethrough. These rods **54** serve to add structural rigidity to the submodule **18** during assembly.

The bracket pairs **46, 47** serve not only to hold the pickup head assemblies **50** but also to allow those heads to be precisely positioned along a line perpendicular to the radii of the tone wheels **32–37**, by adjustment of the screw-nut assemblies **48**. The assemblies **50** are also adjustable along the radii by means of an adjustment screw **56** projecting from the outer end of each of the assemblies **50**.

The screws **56** are each seated in one of four cross channels **58** which are affixed at the upper and lower outer ends of the submodules **18** and **20** and between the plates **24, 26**. As best seen in FIG. 1 each of the channels **58** is preferably affixed in the submodule by having tongue-like extensions **59** at its extreme ends enter conformingly shaped holes in the plates **24, 26**.

Referring again to FIG. 2 the pickup head assembly **50** will now be discussed in greater detail. That assembly **50** includes a mounting block **60** to which are affixed a pair of parallel spaced pole pieces **62** which extend to a position just adjacent to the outer edges of the adjacent tone wheels, as wheel **33** in FIG. 2. The pole pieces **62** are made of a low magnetic reluctance material such as iron. Between the wheel edges and the mounting block **60** and betwen the pole pieces **62** is a multi-turn wire induction coil **64** wound on a core **65** of low magnetic reluctance material. The core **65** spans betwen the pole pieces **62** and forms therewith part of a magnetic circuit.

In addition the pickup head assembly includes a pair of spaced coil terminals **66** and **67** to which the ends of the induction coil **65** are electrically connected. Insulated tone signal output wires, such as the wires **55** and **56**, which function to electrically connect the terminals **66** and **67** of each assembly **50** with other components of an elec-

trical musical instrument, are provided connected to those terminals.

A coil spring **69** is also provided about the threaded portion of the screw **56** for bearing against the block **60** and the interior side of the channel **58**.

The pole pieces **62** are affixed on the top and bottom of the block **60** by a rivet **61**. The rivet **61** as well as the block **60** is preferably made of a non-magnetic material such as nylon or aluminum.

In accordance with an important feature of the present invention the tone wheels **32–37** are, as is best shown in FIGS. 2 and 3, constructed in a laminated manner with a pair of spaced serrated edged discs **70** and **71** with a disc-shaped plastic magnetic material filling **72** sandwiched between them. The three discs **70**, **71** and **72** are mounted on a common hub **73**. A spacer ring **74** is positioned between the discs **70** and **71** adjacent to the hub **73**.

The discs **70** and **71** are formed from a low magnetic reluctance material such as steel or iron, and the magnetic filler **72** is preferably stamped from a plastic or rubber magnetic sheet. This material is flexible and to a certain extent deformable and comprises a ceramic magnetic material in a rubber or plastic carrier. Because of its deformability the spacer ring **74** is provided to insure sufficient structural rigidity for the wheel **33**.

The diameter of the magnetic disc **72** is less than that of the serrated discs **70** and **71** so that at least the serrations thereof project beyond the magnetic disc **72**.

In overall operation the above described tone signal generator **10** produces twelve electrical tone signals, six from each submodule. In general operation, the tone signal generator **10** is similar to the tone signal generator described in the aforementioned L. J. Haviland and H. E. Meinema application. That is, the synchronous motor **14** drives the main shaft **28** through the coupling **30** at essentially a constant angular velocity. The shaft **28** in turn drives the wheel shafts **39** and **40** of each submodule at differing angularly velocities by means of the gear trains **41–42** and **43–44**. The tone wheels **32–37** which are driven thereby cooperate with the pickup head assemblies to produce an electrical tone signal.

Unlike prior tone signal generators, however, the pickup head assemblies **50** and tone wheels **32–37** produce electrical tone signals of a pure alternating signal nature in a unique manner.

The general principle of the operation of the tone wheels and pickup head is best illustrated in FIG. 4. Referring to that figure a simplified tone signal generator **100** has: a tone wheel **132** comprising a pair of parallel spaced and serrated edge magnetic material discs **170** and **171** with a disc-shaped magnet **172** sandwiched between them. The wheel **132** is rotated on a shaft **139** in the direction indicated by the arrows **80**.

Each of the discs **170** and **172** has an equal number (eight in this case) of serrations about its edge and they are positioned so that the serrations align axially one half cycle out of phase from each other. That is, every crest such as a crest **170C** of the serrations of the disc **170** is opposite a trough, such as a trough **171T** of the serrations of the disc **171**. Similarly, every crest, such as the crest **171C**, of the serrations of the disc **171** is opposite a trough, such as the trough **170T**, of the serrations of the disc **170**.

The magnet or magnetic disc **172** is axially magnetized in the direction and manner indicated by the double headed arrow **81** and associated conventional symbols (N for north pole and S for south pole).

A simplified pickup head **150** is provided including a non-magnetic support **160** which supports a combined core and pole piece about which is wound an inductance coil **164**. The pole piece **162** is a strip of low magnetic reluctance material, such as iron, formed in a generally U-shape (in cross section). The longitudinal ends **162A** and **162B** of the pole piece **162** are approximately as wide as the spacing between the discs **170** and **171** and are separated from each other a distance equal to one half of the cycle of the serrations formed on the rims of the discs **170**, **171**.

The pickup head **150** is so positioned that the revolving crests of the serrated discs **170**, **171** of the wheel **132** just clear the ends **162A** and **162B** of the pole piece **162**.

With this construction, when the crest of one of the discs **170** or **171** is adjacent to the end **162A** the crest of the other one of the discs **171** or **170** is adjacent to the end **162B**. Thus at one instance, a crest **170C** of disc **170** is juxtaposed to the end **162B** of pole piece **162** and a crest **171C** of the disc **171** is juxtaposed to the end **162A**. As the wheel **132** turns through one half cycle of the serration (one sixteenth revolution of the eight serrated wheel **132**) the condition is reversed and a crest **171C** of disc **171** is moved into juxtaposition with the pole piece and **162B** and simultaneously a crest **170C** of disc **170** is moved into juxtaposition with the pole piece end **162A**. Half of a serration cycle later the realtionship is again reversed, and so on, continuously, as the wheel **132** rotates.

Consider now the flux path between the magnetic poles of the permanent disc magnet **172**. As the discs **170**, **171** are made of a low magnetic reluctance material, such as iron or steel, the vast majority of the magnetic flux will be guided therethrough. In the absence of a pickup head **150**, it would be distributed more or less uniformly arching between the serrated edges of the two discs **170**, **171**. However, the presence of the low reluctance core and pole piece **162** adjacent to the edge of the wheel **132** presents an alternative lower reluctance path for magnetic flux. Consequently a significant portion of the magnetic flux is concentrated through the core-pole piece **162**.

At an instant in which the wheel **132** is oriented such that the crest **170C** is juxtaposed to the end **162A** and consequently the crest **171C** is juxtaposed to the end **162B**, the path of least magnetic reluctance lies through the core pole piece **162** from end **162A** to end **162B**. That is, a significant portion of the flux from the north pole's surface of permanent magnet **172** passes through the disc **160**, across the small air gap between the juxtaposed crest **170C** and pole piece end **162A** through core-pole piece **162** (coil **164**) to its other end **162B**, across the small air gap between that end and the juxtaposed crest **171C** and through the disc **171** to the south pole surface of the magnet disc **172**. Note that the magnetic flux passes through the inductance coil **164** from end **162A** to end **162B**.

When the wheel **132** has turned one half of a serration cycle the opposite disc crest will be adjacent to the pole piece ends **162A** and **162B**. In this case, the path of least reluctance lies from the north pole surface of the magnetic disc **172** through the disc **170** across the small air gap between the newly juxtaposed crest **170C** and the end **162B**, through the core-pole piece **162** (coil **164**), across the small air gap between end **162A** and the juxtaposed crest **171C**, and through the disc **171** to the south pole face of the magnetic disc **176**. Note that in this case the magnetic flux passes through the inductance coil **164** from end **162B** to end **162A**, that is, in the opposite direction than before.

Thus, as the wheel **132** rotates, the flux through the core portion surrounded by the coil **164** of the core-pole piece **162** cyclically goes from a maximum in one direction to a maximum in the other direction and then returns to the maximum level in the first direction. For every revolution this cycle is repeated once for every cycle of serrations formed about the edge of the disc **170** and **171**. At a midpoint between the two maximums the met flux through the core portion of core-pole piece **162**, and thus through the coil **164**, is zero.

It is elementary electronics that the instantaneous electric voltage developed in an inductance coil is proportional to the number of turns in the coil and the rate of

change in the magnetic flux. This relationship can be expressed in the familiar formula:

$$e=KN\frac{d\phi}{dt} \quad (1)$$

Where e is the voltage generated, N the number of turns, ϕ the instantaneous flux passing through the coil, K is a constant of proportionality and d/dt is the mathematical derivative symbol expressing the instantaneous rate of change with respect to time t.

For the coil **164** of the pole piece **150** the instantaneous flux, ϕ, to at least a first degree of analysis, can be expressed by the following formula:

$$\phi=\phi \text{ max. } f(kwt) \quad (2)$$

Where k is equal to the number of crest on each disc, w is the rotational speed, t is time, and ϕ max is given by the following expression:

$$\phi \text{ max.}=K'\frac{MA}{2a} \quad (3)$$

in which K' is a constant of proportionality, M is magnetomotive force, A is the effective area of the crest, and a is the air gap distance between crests and the pole pieces.

The Formula 2 states that the instantaneous flux ϕ is equal to the maximum flux ϕ max multiplied by a function of the number of crests, the angular velocity and time, while the Formula 3 states that the maximum flux is a function of the electromagnetic force, the area of the crest and the separation of crests.

It follows from Formulas 1, 2 and 3 that

$$e=K''\frac{NMAkw}{2a}f'(kwt) \quad (4)$$

where K is a constant of proportionality.

That is, the electrical voltage output of the coil of the simplified tone signal generator of FIG. 4 is proportional to the number of turns, the magnetomotive force, the crest tip area, the number of crests, and the angular rotational speed, and is inversely proportional to the minimum air gap between the pole pieces and the discs, and is a function of the number of crests and the angular velocity or rotational speed.

Thus the voltage output will vary cyclically at a frequency determined by the number of crests or serrational cycles and the speed of rotation.

The general analysis and method of operation of the simplified tone wheel **132** and pickup **150** of the simplified generator **100** of FIG. 4 apply to the tone wheels **32–37** and pickup head assemblies **50** of the tone signal generator **10** of FIGS. 1–3.

As in the case of the tone wheels disclosed in the aforementioned Haviland and Meinema application, it is not necessary to employ serrations of a precisely sinusoidal nature as shown for simplification in FIG. 4. Substantially sinusoidal outputs may be obtained using gear teeth type serrations such as those shown for the tone wheel **33** in FIGS. 2 and 3. In this case the Formulas 2, 3 and 4 apply but the letters A represents the tooth tip area, and k the number of teeth per gear-like disc.

It is not necessary that the ends **62**A and **62**B of the pole pieces **62** be separated by one-half of the serration cycle about the wheel **32** as any odd multiple of this distance will achieve a similar result.

Thus, again referring to the embodiment of FIGS. 1–3 and especially to the relationship between the pickup head assembly **50** and tone wheel **33** shown in FIG. 2, it can be seen that the pole pieces **62** are there separated by three and a half serration cycles of the serrations on the discs **70** and **71**.

The generator **10** of FIGS. 1–3 not only develops the twelve fundamental frequencies but does this at high voltage levels, with low harmonic distortion and with low noise, crosstalk, flutter, etc. Furthermore it does it with a maximum of standardized parts and assembly, resulting in great economies in manufacture.

Experimental and construction data

As an example of the advantages of the present invention the following data of one particular version of the generator **10** is submitted. It should be borne in mind, however, that the present invention may take many other forms that may vary greatly therefrom without departing from the spirit of the invention.

The octave generator **10** produces the octave **F6** to **E7**, notes **66–77**, in round numbers, 1398 to 2637 Hz. In use in an organ, the top octave, notes **78–89**, can be obtained by frequency doubling; the lower octaves below note **66** would be obtained by dividing. Although the alternator generator **10** can be run at double speed to produce the top octave, it is considered more economical and more desirable overall to use one octave of doublers than an extra octave of dividers.

The frequency (f) of the tone signal generated in any pickup head assembly **50** is given by the formula:

$$f=K'''Rrk \quad (5)$$

in which K''' is a constant of proportionality, R is the rotational speed of the motor **14**, r is the gear ratio of the gears **40**, **41**, **42**, **43** that drive the particular tone wheel and k is the number of teeth on each disc of the wheels.

For example, with an 1800 r.p.m. drive motor **14**, a gear ratio of 90 to 112 and 58 teeth to the tone wheel **32** (submodule **20**) the frequency of the tone signal produced is computed as follows:

$$f=1800\ \frac{\text{rev.}}{\text{min.}}\times\frac{1\text{ min.}}{60\text{ sec.}}\times\frac{90}{112}\times 58=1398Hz$$

That is, approximately the note F.

It should be obvious to those skilled in the art that, starting with the frequencies of any tones desired to be produced, numerous combinations of motor speed, gear ratios and tooth number may be selected to produce that tone in accordance with the Formula 5.

The gear ratio of the second submodule **20** is 90 to 112 for gears **42** and **41** and 63 to 74 for gears **44** and **43**.

The tone wheels of both submodules **18** and **20**, **32** and **35** are each preferably fabricated with each disc having 58 teeth, while the wheels **33** and **36** of both submodules **18** and **20** have 73 teeth and the wheels **34** and **37** of both submodules **18** and **20** each have **92** teeth. The synchronous motor is chosen to operate at 1800 r.p.m. and the following gear ratios are used:

For the shaft **39** a ratio of 92 to 102 was employed and a ratio of 86 to 90 for shaft **40** was employed. That is, the equal sized gears **42** and **41** respectively have 92 and 102 gear teeth while the gears **44** and **43** respectively have 90 and 86.

Under the above construction the assemblies **50** associated with the gears **32–37** in each submodule will substantially produce the notes **66–77**, F to E, as follows.

Note:	Tone wheel—submodule
66 F	**32—20**
67 F♯	**35—20**
68 G	**32—18**
69 G♯	**35—18**
70 A	**33—20**
71 A♯	**36—20**
72 B	**33—18**
73 C	**36—18**
74 C♯	**34—20**
75 D	**37—20**
76 D♯	**34—18**
77 E	**37—18**

The theoretical and actual frequencies produced for

these notes as well as an expression of the percentage error are given in Table II:

TABLE II

Freq. No.	Note	Frequency Theoretical	Frequency Actual	Error, percent
66	F	1,396.912 960	1,398.213 787	+.093
67	F#	1,479.978 016	1,481.351 349	+.093
68	G	1,567.981 536	1,569.411 757	+.091
69	G#	1,661.218 592	1,662.666 657	+.087
70	A	1,760.000 000	1,759.820 800	−.010
71	A#	1,864.654 432	1,864.459 456	−.010
72	B	1,975.533 440	1,975.294 108	−.012
73	C	2,093.004 352	2,092.666 654	−.016
74	C#	2,217.460 672	2,217.856 351	+.018
75	D	2,349.317 824	2,349.729 726	+.018
76	D#	2,489.015 424	2,489.411 752	+.016
77	E	2,637.020 160	2,637.333 318	+.012

To comply with musical standards it is desirable to have the frequency of A, 440 Hz. as accurate as possible. Therefore in this generator, A7, 1760 Hz. was set up to have the highest accuracy (better than one part in 9000). The accuracy of the others is better than approximately one part in 1100.

From Equation 4 above it can be seen that the output voltage is directly proportional to the number of turns on the coil, the magnetomotive force of the magnet, the area of the tip of the tooth, the rotational speed, and the number of the teeth, and inversely proportional to the gap between the pole pieces and teeth.

For a given frequency the number of teeth k and rotational speed w are set. For ease of manufacturing and adjustment a gap a of 10 to 15 mils is considered practical. The number of turns N is also limited since the impedance of the coil must be kept within reasonable limits, e.g., 10K ohms. Therefore, the variable left to produce the required voltage are the magnetomotive force M and the area of the tooth tip A.

Even these two variables M and A are restricted by certain practical limitations such as magnetic material. This material was Plastiform 1–H, and anisotropic elastomer bonded barium-ferrite permanent magnet material which can be machined, cut or punched from flat sheets. Ceramic magnets had been considered but proved more expensive since they required grinding and their brittleness is a major disadvantage.

All three tone wheels were fabricated from .045" standard gears and .125" Plastiforms so their overall thickness of .215" allowed the use of the same pole piece width, .406". These dimensions permit the use of assembly tolerances of standard generators.

Measurements with experimental coils indicated that a coil with 5000 turns would produce a satisfactory voltage with pole piece to gear gaps greater than .007". Impedances measured at the operating frequencies of such a coil vary from 12K ohms to 17K ohms.

Experiments using thicker gears, thereby increasing the tooth area A, showed an increase in output voltage. Doubling the gear thickness from .035" to .070" doubles the output voltage. This appears the most desirable method to increase the output voltage at a given pole piece to tooth gap.

The maximum total harmonic distortion that is considered acceptable is 5%. The function $f(kwt)$ in Equation 4 determines the waveshape and therefore the resulting harmonic distortion. The function $f(kwt)$ is the reluctance of the magnetic circuit formed by the pickup and tone wheels. As the wheels rotate by the pickup, the reluctance and therefore the flux should vary sinusoidally to produce a sinusoidal voltage. Standard gears having a large number of teeth (the lowest in this generator is 58 teeth) and simple straight pole pieces were found to generate a sinusoidal voltage. The only restrictions were that the pole piece to gear gap should not be too small and that the pole piece separation should be compatible with the tooth spacing.

It was determined experimentally that minimum distortion is achieved when the pole piece thickness approximately equals the tooth tip length. Since the 92 tooth wheel is the most critical, the pole piece thickness was optimized for this wheel and used for the 58 and 73 tooth wheels without exceeding the maximum permissible distortion level.

Several early experiments indicated that if the pole pieces span several teeth rather than adjacent teeth, the output is not affected. When the pole pieces are separated by .405" as in the described wheels, they align with the teeth of all three wheels. This permits the use of one pickup assembly for all three wheels. The gap dimension is most critical for the 92 tooth wheel and the least for the 58 tooth wheel; the former having teeth closer together than the latter. This .405' dimension proved to be suitable from a constructional viewpoint since this is ample space for bobbin with 5000 turns. The pickup assembly shown in FIGURES 1 and 2 has a cylindrical core which determines the .450" dimension and is held to within +.003".

No differences were observed whether the pole pieces and cores were made from cold rolled steel or such sophisticated metals as Carpenter "49" or Armco iron. All pole pieces and cores were annealed in a dry hydrogen atmosphere.

One method of gaining even higher voltage level output signals from the tone signal generator is shown in FIG. 5. Referring to that figure, a tone wheel **33** constructed as the wheels **32–37** of the generator **10** of FIGS. 1–3 is mounted for rotation adjacent to a pickup head **250** including a pair of spaced pole pieces **262** with a core **265** mounted therebetween.

About the core **265** is a multiturn inductive coil **264**. The pole pieces **262** each have two pickup ends designated **262A**, **262A'** and **262B**, **262B'**. The ends of each pole piece **262** are spaced one tooth cycle apart. The pole pieces **262** are spaced an integral number plus one half of serration cycles apart so pole piece **262** has its ends adjacent to the teeth of one disc (disc **71**) and the gap between teeth of the opposite disc (e.g. disc **73**) while the end of the other pole piece **262** are oppositely positioned.

In this manner a larger amount of magnetic flux is guided through the core **265** to generate an increased voltage therein. The principle of multiple pole piece ends may be extended to have three or even more ends employed.

Furthermore, more than one pickup assembly with their coils connected together in phase could be employed with a single tone wheel to produce still larger voltage levels.

As is now obvious a new improved and effective tone signal generator has been described that may yield high level purely alternating electrical tone signals of a high quality. The above described tone signal generator is economical to manufacture and easy to maintain and lends itself to many applications within the musical instrument field.

While particular embodiments of the invention have been shown and described, it will be obvious to those skilled in the art that changes and modifications may be made without departing from the invention in its broader aspects, and, therefore, the aim in the appended claims is to cover all such changes and modifications as fall within the true spirit and scope of the invention.

What is claimed is:

1. A musical instrument electrical tone signal generator comprising a pair of spaced parallel axially aligned substantially identical tone wheel discs having regularly serrated peripheries, said discs being relatively offset arcuately with the serration humps of one disc opposite the serration valleys of the other, means for permanently magnetizing said discs so that said discs are of opposite magnetic polarity, means for supporting and rotating said discs together in fixed relative position about their common axis, a pickup head comprised of a pair of pole

pieces interconnected by an intermediate portion providing a substantially closed magnetic circuit between the pole pieces, each of said pole pieces having a tooth extending parallel to said axis positioned adjacent to and spanning both said disc peripheries, said teeth being spaced apart such that when one tooth is opposite a hump on one disc and a valley on the other the other tooth is opposite a hump on the said other disc and a valley on the said one disc, such that rotation of said discs at a constant speed produces a substantially sinusoidal periodic reversal of magnetic flux through the intermediate portion of the pickup head magnetic circuit, and a pickup coil inductively coupled to the intermediate portion of the pickup head magnetic circuit.

2. A tone signal generator as called for in claim 1 in which the means for permanently magnetizing said discs comprises a wafer of permanently magnetized material disposed between said discs and having a north pole adjacent one disc and a south pole adjacent the other disc.

3. A tone signal generator as called for in claim 2 in which said wafer is formed of a pliable magnetic material.

4. A tone signal generator as called for in claim 1 in which each of said pole pieces is provided with more than one tooth, and in which all of the teeth of one pole piece are simultaneously aligned with humps on the periphery of one of the discs when all of the teeth of the other pole piece are simultaneously aligned with humps on the periphery of the other disc.

5. A tone signal generator as called for in claim 4 in which the means for permanently magnetizing said discs comprises a wafer of permanently magnetized material disposed between said discs and having a north pole adjacent one disc and a south pole adjacent the other disc.

6. A tone signal generator as called for in claim 5 in which said wafer is formed of a pliable magnetic material.

7. A musical instrument electrical tone signal generator comprising a pair of spaced parallel axially aligned substantially identical tone wheel discs having regularly serrated peripheries, means for permanently magnetizing said discs so that said discs are of opposite magnetic polarity, means for supporting and rotating said discs together in fixed relative position about their common axis, a pickup head comprised of a pair of pole pieces interconnected by an intermediate portion providing a substantially closed magnetic circuit between the pole pieces, each of said pole pieces having a tooth spanning both said disc peripheries, said teeth being spaced apart and oriented such that when one tooth is opposite a hump on one disc it is opposite a valley of the other disc and the other tooth is simultaneously opposite a hump on the said other disc and a valley of the said one disc such that rotation of said discs at a constant speed produces a periodic reversal of magnetic flux through the intermediate portion of the pickup magnetic circuit, and a pickup coil inductively coupled to the intermediate portion of the pickup head magnetic circuit.

8. A tone signal generator as called for in claim 7 in which the means for permanently magnetizing said discs comprises a wafer of permanently magnetized material disposed between said discs and having a north pole adjacent one disc and a south pole adjacent the other disc.

9. A tone signal generator as called for in claim 8 in which said wafer is formed of a pliable magnetic material.

10. A tone signal generator as called for in claim 7 in which each of said pole pieces is provided with more than one tooth, and in which all of the teeth of one pole piece are simultaneously aligned with humps on the periphery of one of the discs when all of the teeth of the other pole piece are simultaneously aligned with humps on the periphery of the other disc.

11. A tone signal generator as called for in claim 10 in which the means for permanently magnetizing said discs comprises a wafer of permanently magnetized material disposed between said discs and having a north pole adjacent one disc and a south pole adjacent the other disc.

12. A tone signal generator as called for in claim 11 in which said wafer is formed of a pliable magnetic material.

References Cited

UNITED STATES PATENTS

1,137,544	4/1915	Severy	310—155
2,552,610	5/1951	White	310—155
3,058,019	10/1962	Eisler	310—156
3,183,387	5/1965	Wasynczuk	310—263

MILTON O. HIRSHFIELD, Primary Examiner

ROBERT SKUDY, Assistant Examiner

U.S. Cl. X.R.

84—1.01, 1.15; 310—114, 156