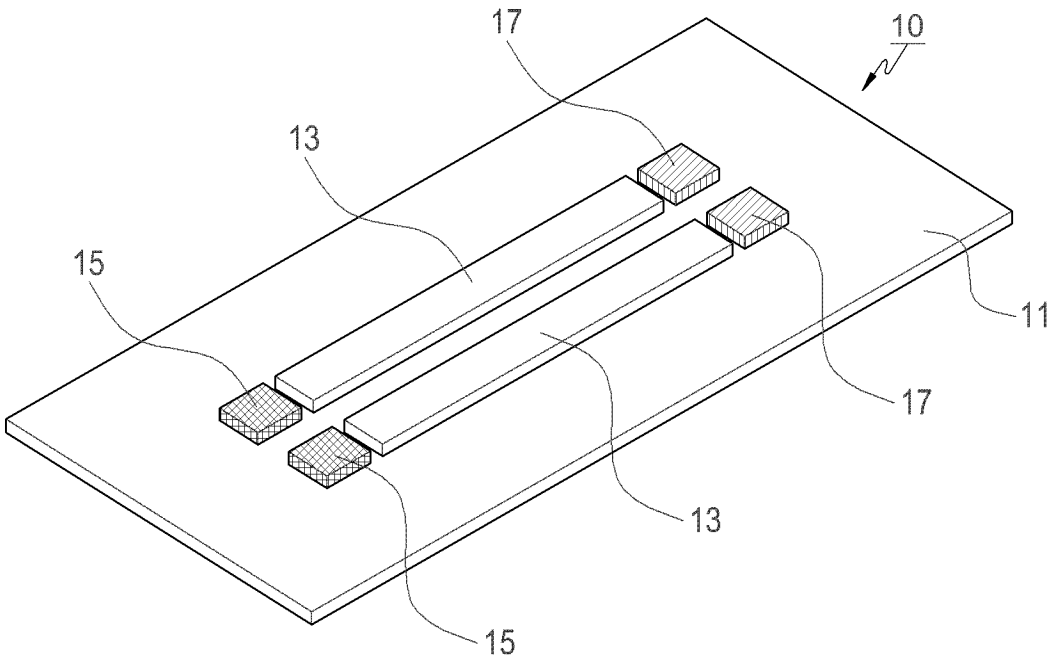

FIG.1

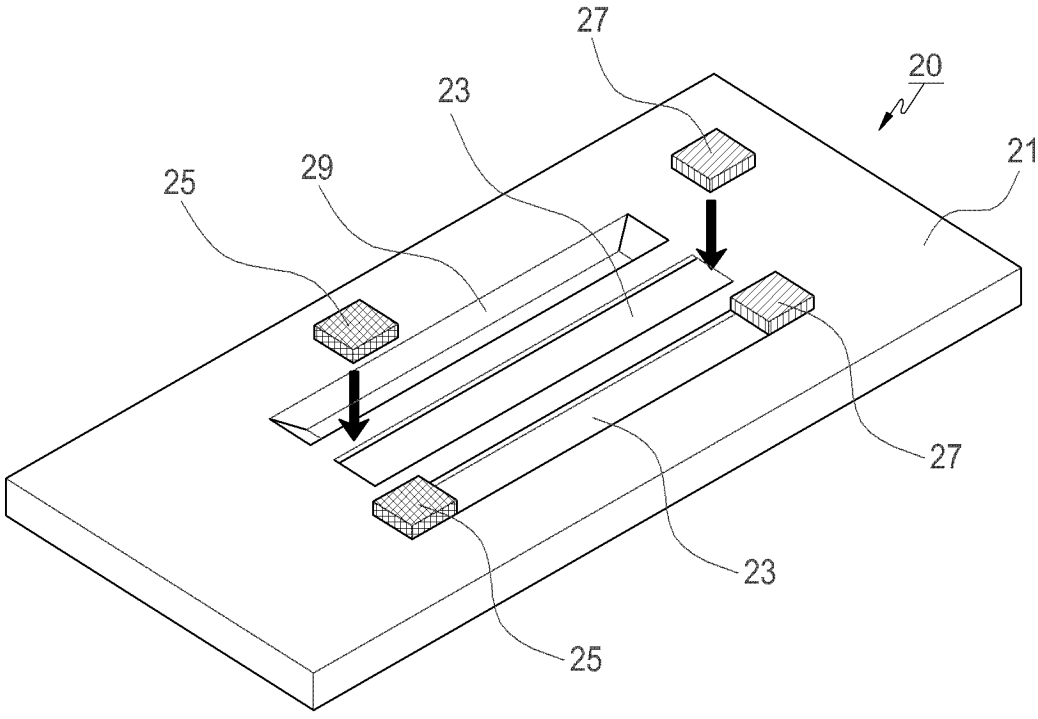

FIG.2

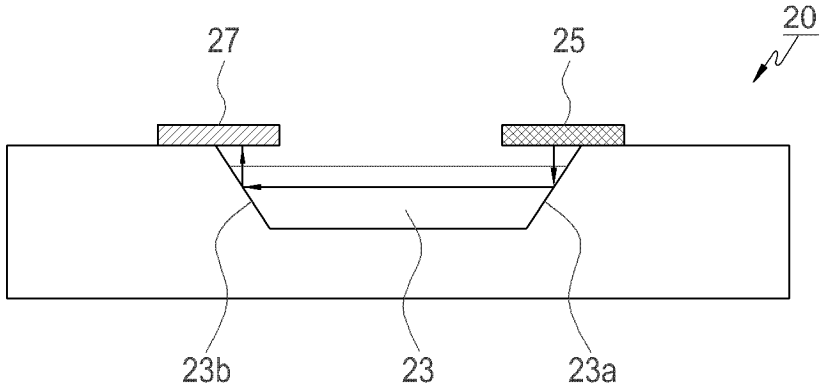

FIG.3

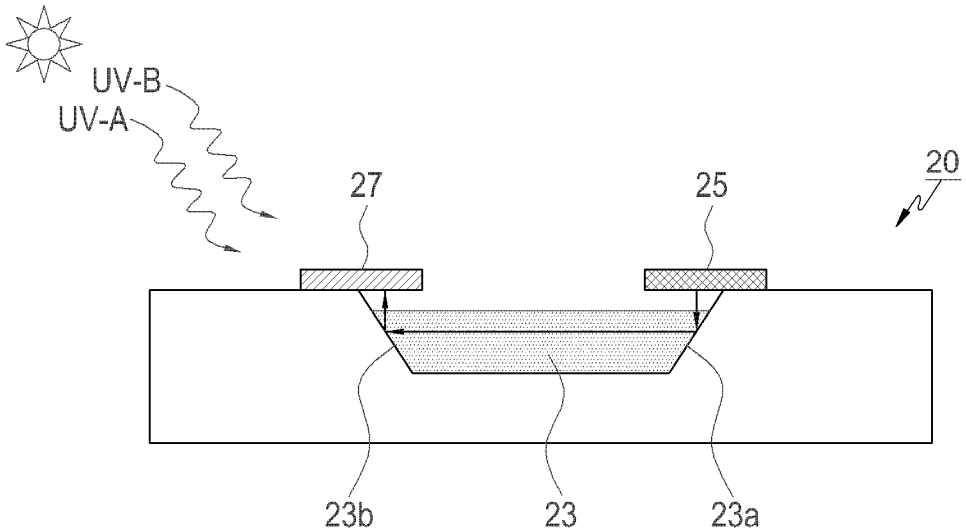

FIG.4

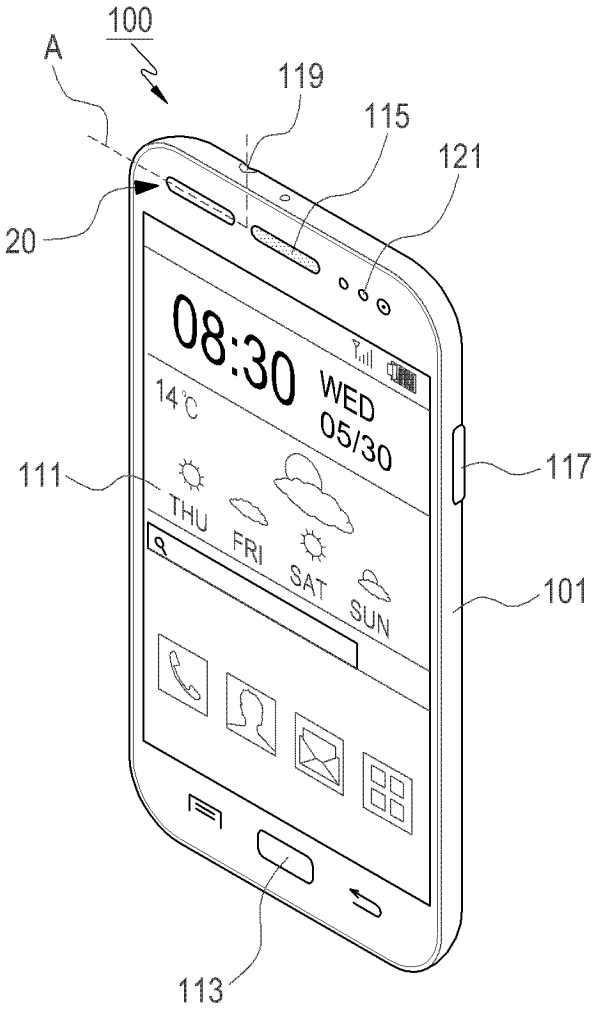
100
A
119
115
121
20
08:30
WED
05/30
14°C
111
117
THU
FRI
SAT
SUN
101
113

FIG.5

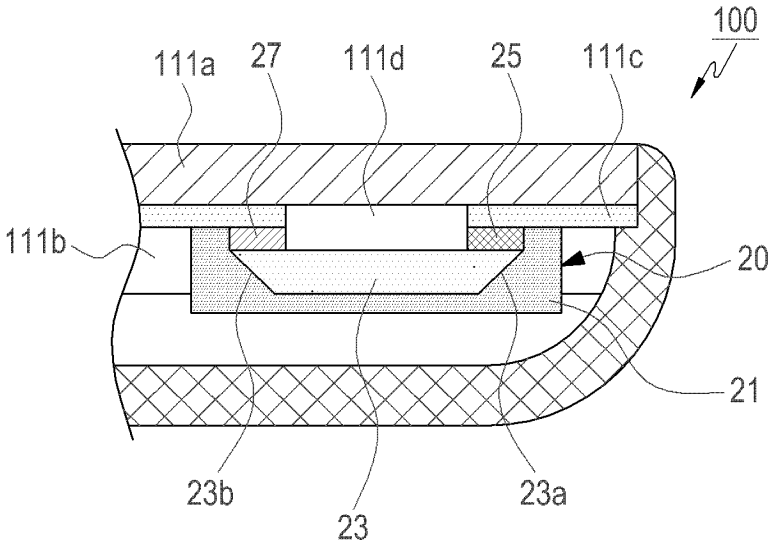
100
111a
27
111d
25
111c
111b
20
21
23b
23
23a

FIG.6

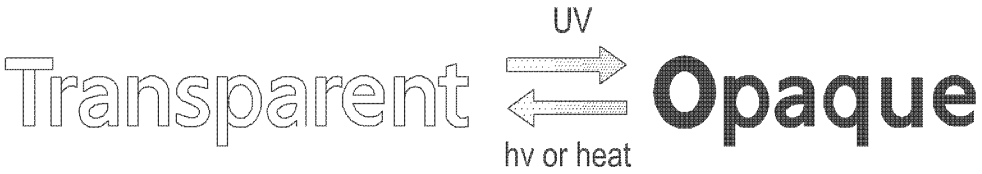
UV
Transparent
Opaque
hv or heat

FIG.7

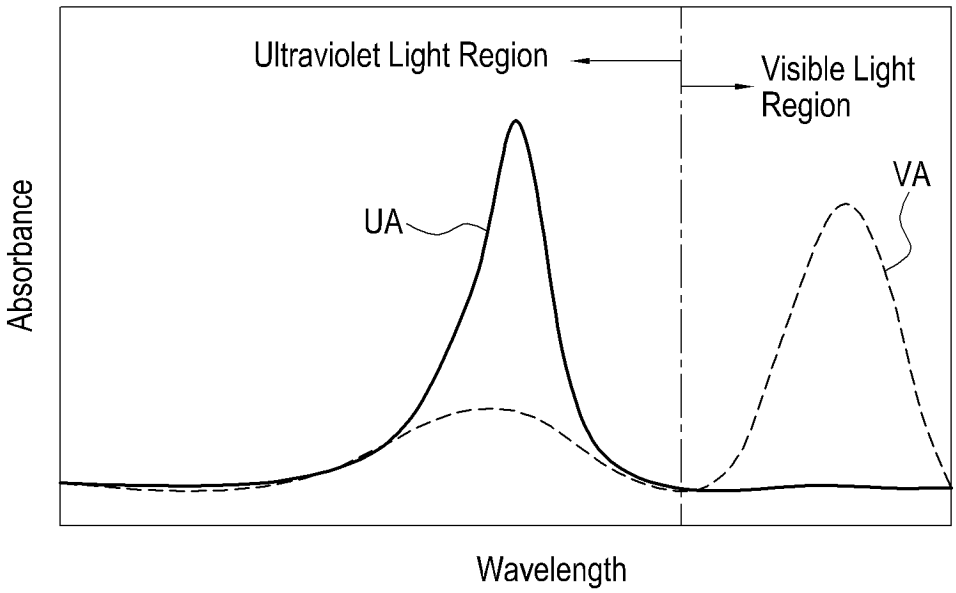
Ultraviolet Light Region
Visible Light Region
UA
VA
Absorbance
Wavelength

FIG.8

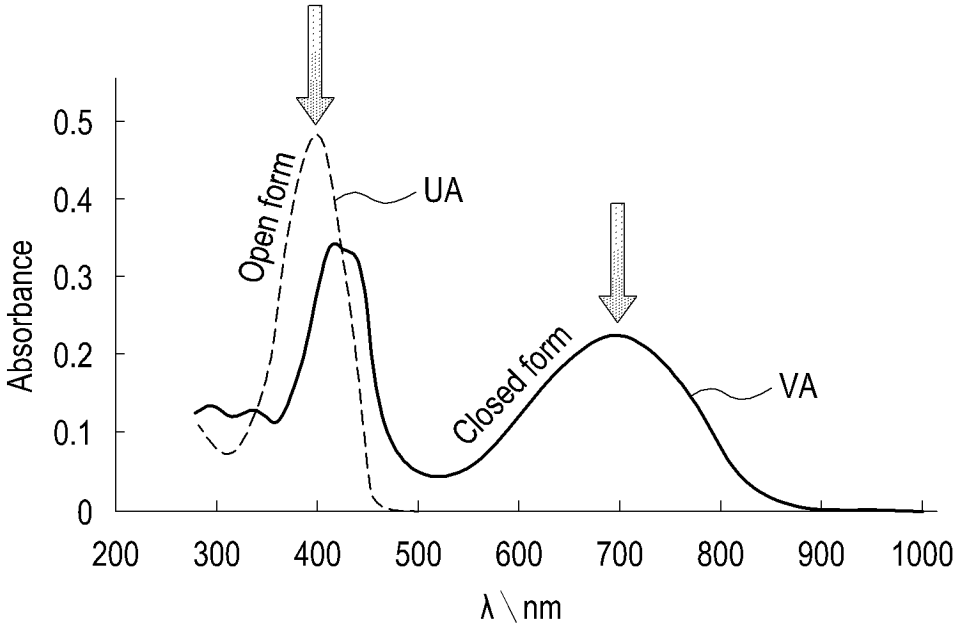
0.5
0.4
0.3
0.2
0.1
0
Absorbance
Open form
UA
Closed form
VA
200
300
400
500
600
700
800
900
1000
λ \ nm

FIG.9

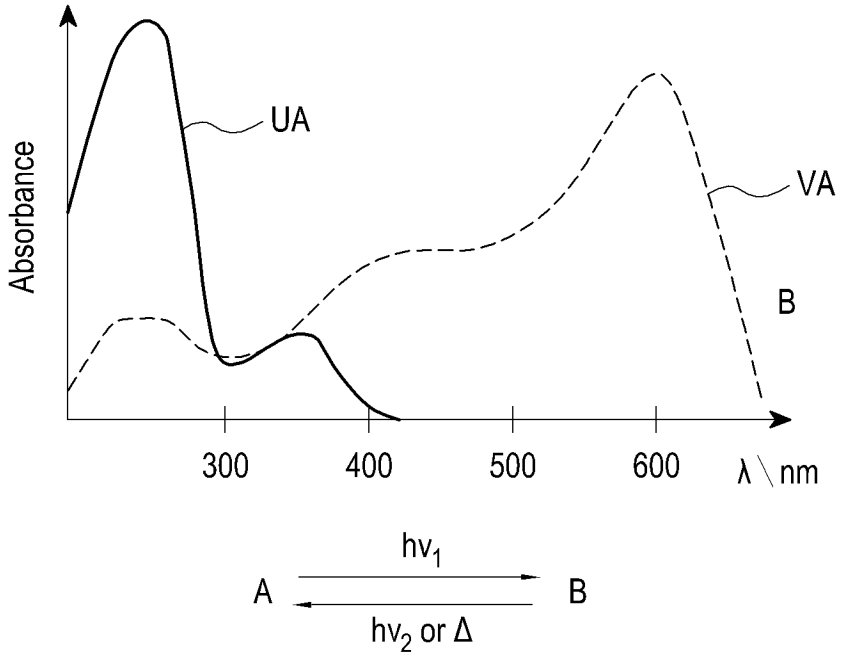
Absorbance
UA
VA
B
300
400
500
600
λ \ nm
hν1
A
B
hν2 or Δ

FIG.10

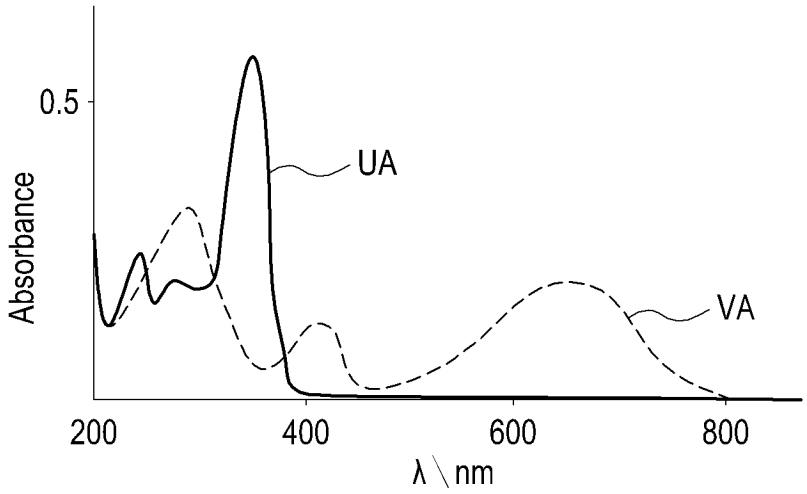
0.5
Absorbance
UA
VA
200
400
600
800
λ \ nm

FIG.11

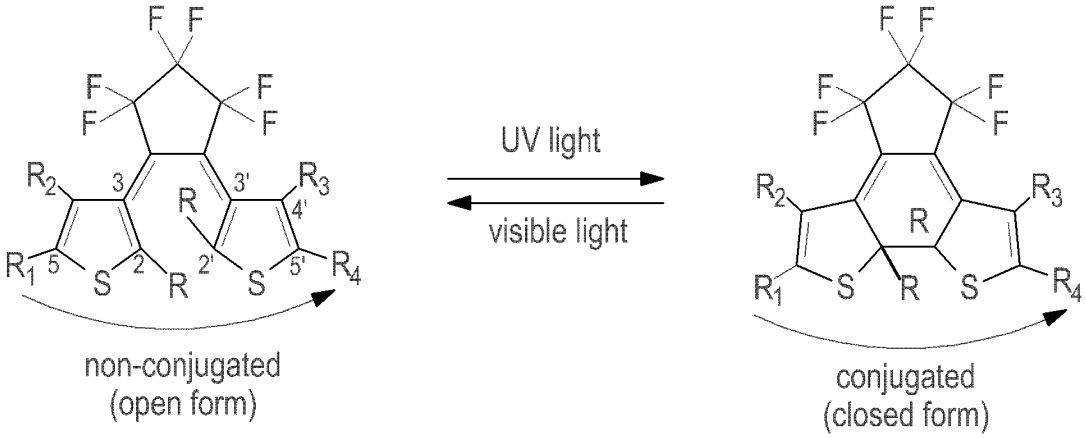
UV light
visible light
non-conjugated
(open form)
conjugated
(closed form)

FIG.12

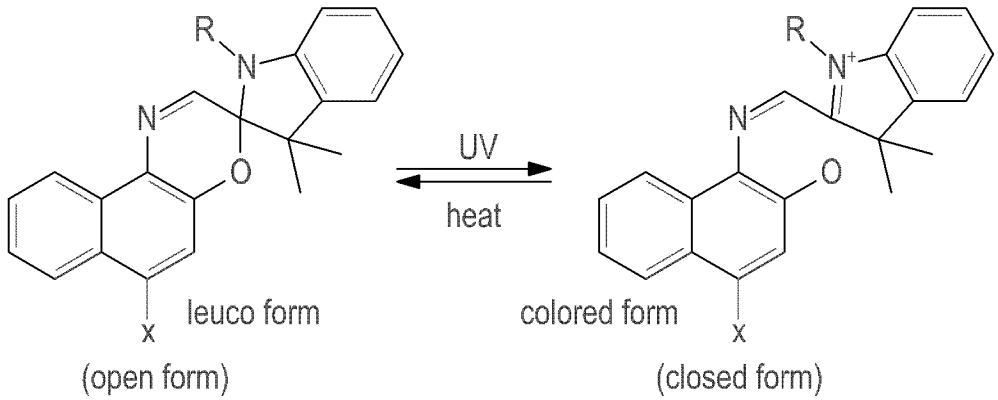
UV
heat
leuco form
(open form)
colored form
(closed form)
Spiro-mero photochromism

FIG.13

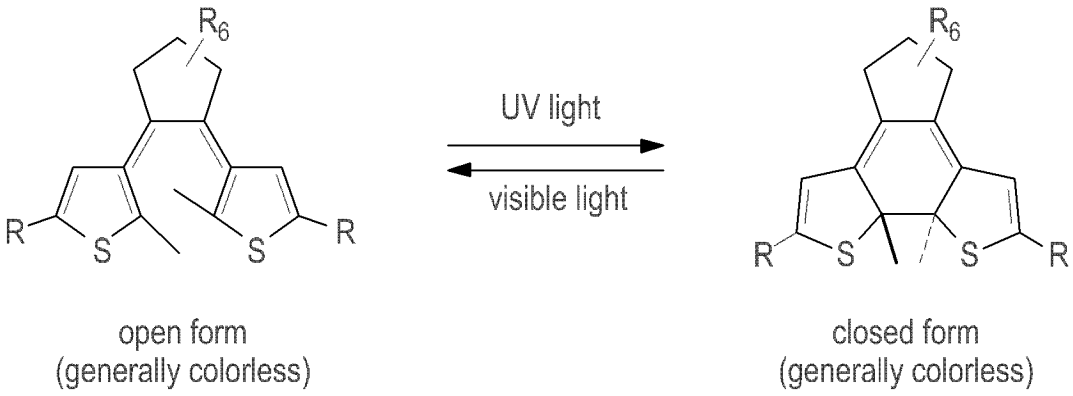

open form
(generally colorless)

closed form
(generally colorless)

Dithienylethene photochemistry

FIG.14

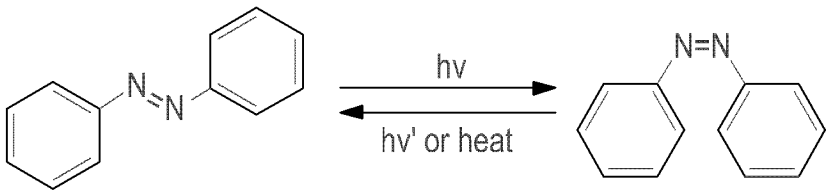

trans-azobenzene
(open form)

cis-azobenzene
(closed form)

Azobenzene photoisomerization

FIG.15

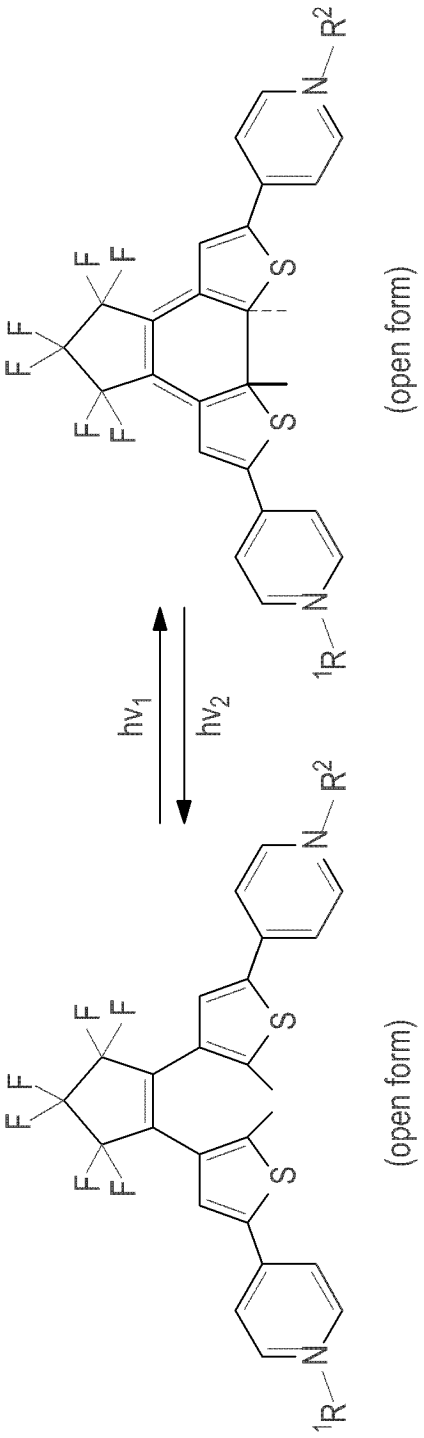
F
F
F
F
F
F
S
S
N
R2
1R
N
(open form)
hν1
hν2
F
F
F
F
F
F
S
S
N
R2
1R
N
(open form)

FIG.16

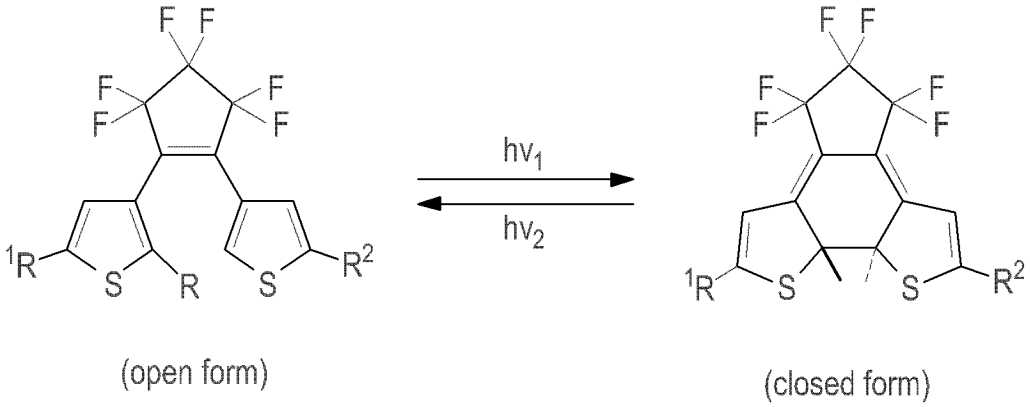

FIG.17

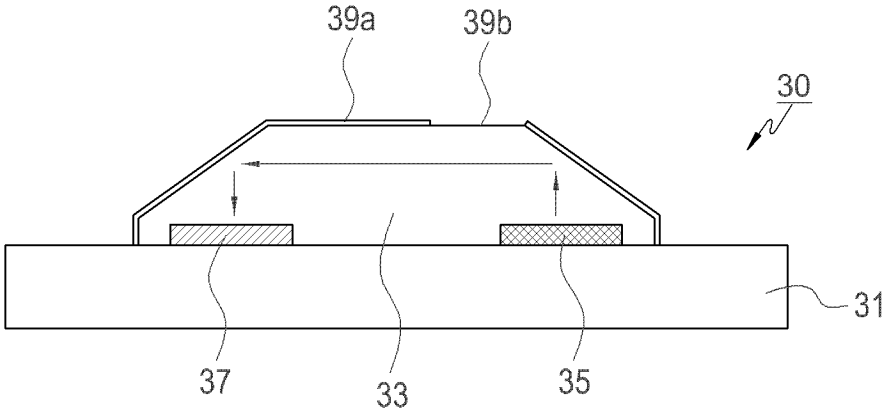

FIG.18

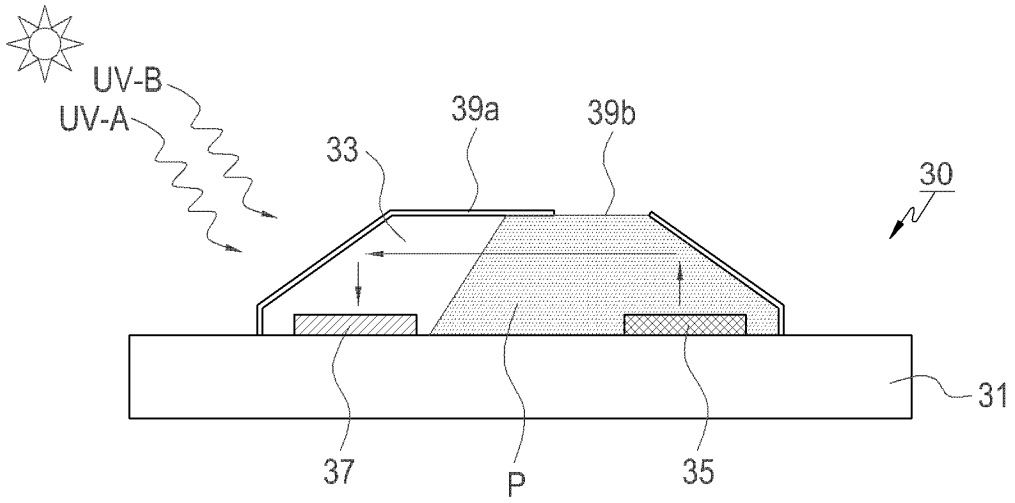

FIG.19

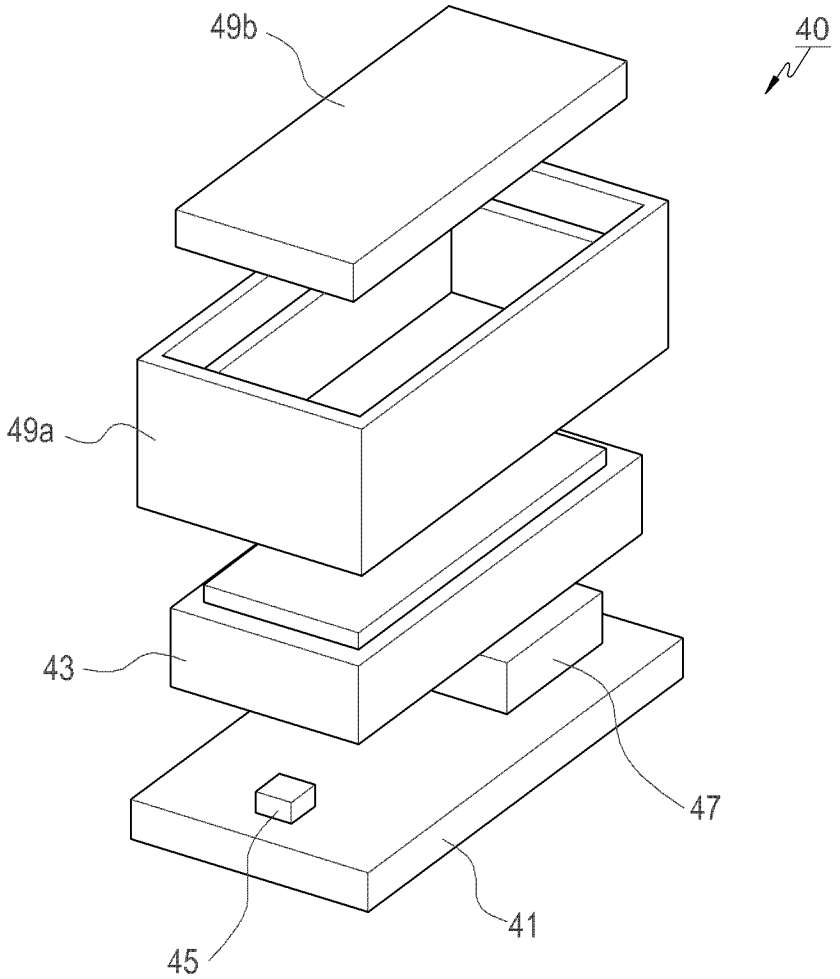

FIG.20

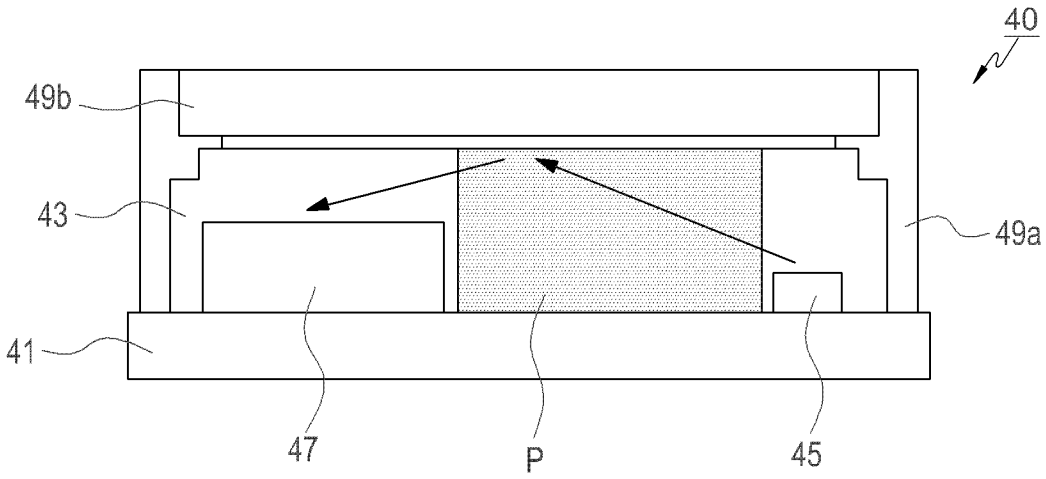

FIG.21

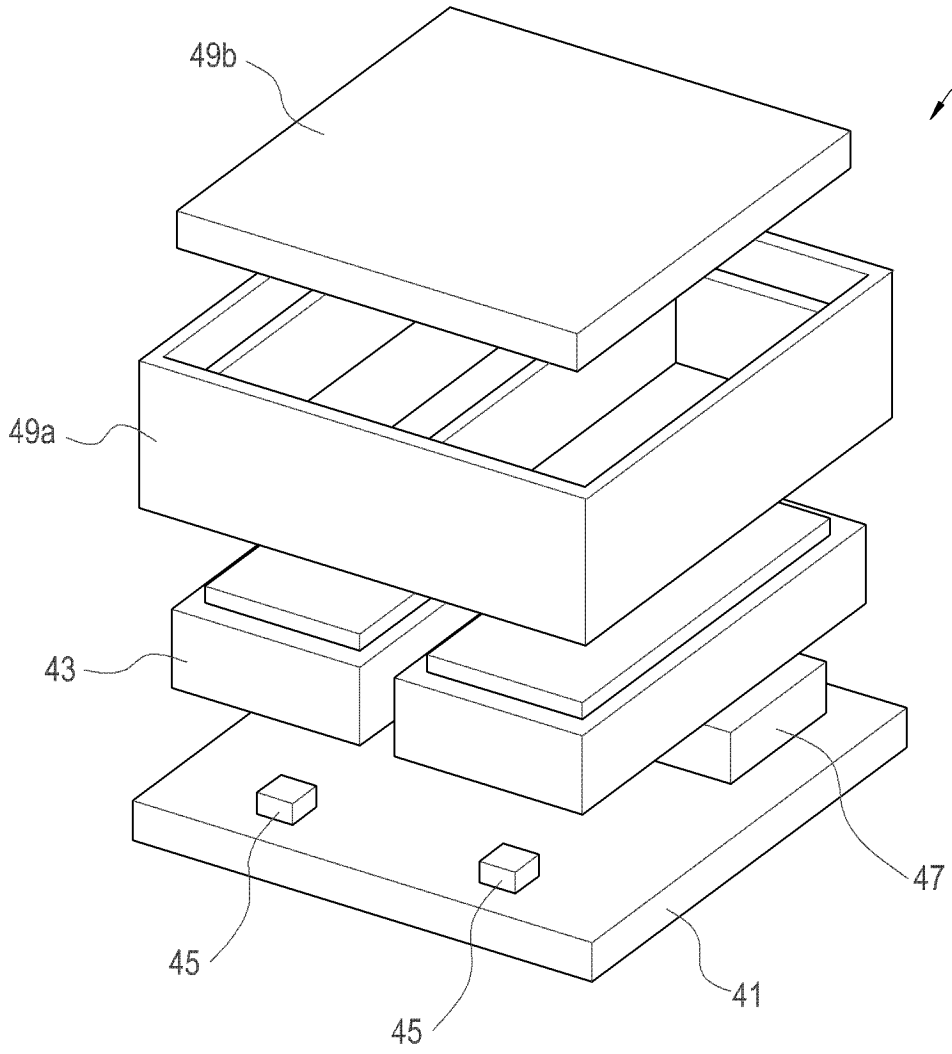

FIG.22