Jan. 3, 1939. T. J. NUNAN 2,142,254

ELECTRIC CIRCUIT CONTROLLED BY LIGHT CELLS

Original Filed March 5, 1935 2 Sheets-Sheet 1

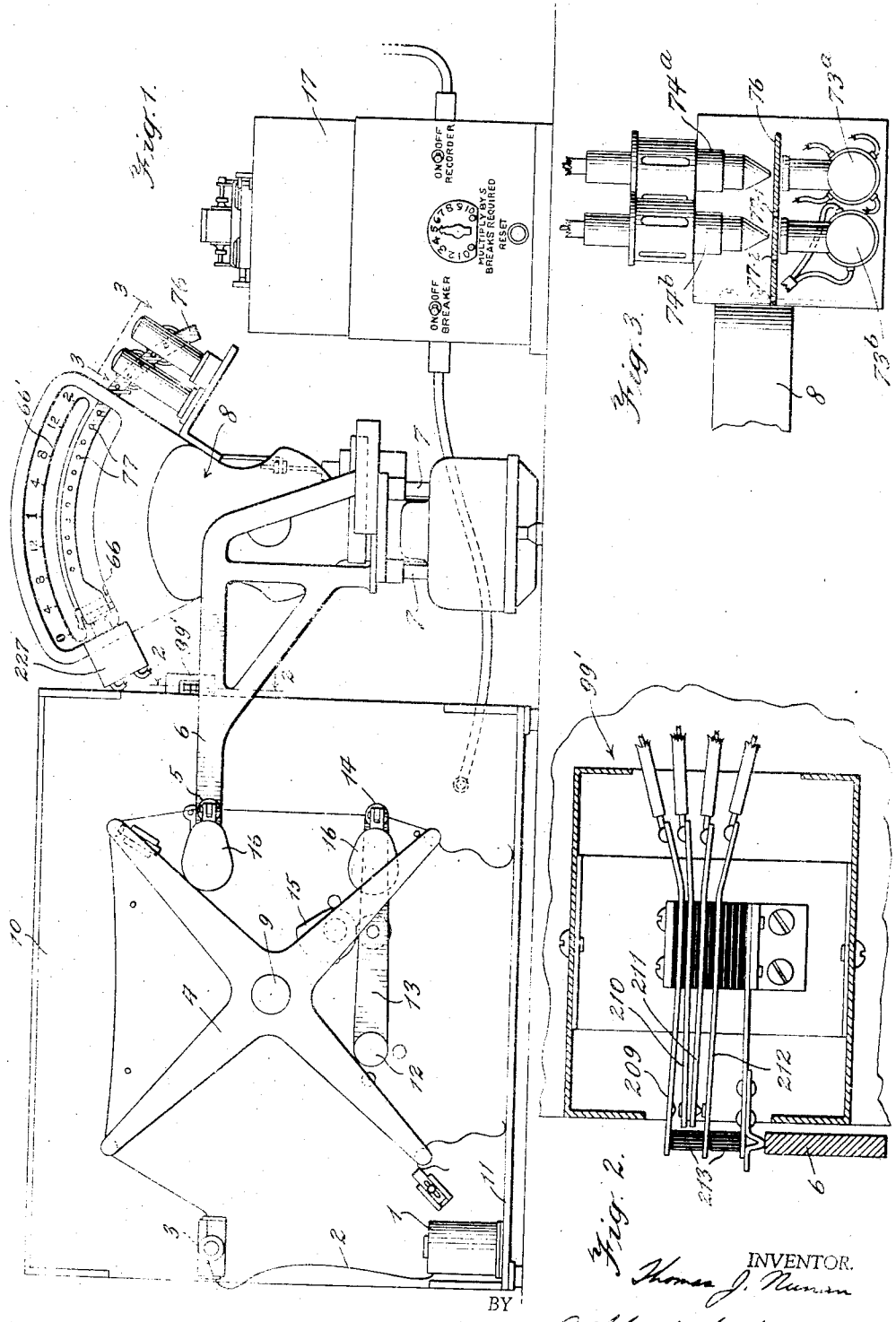

Jan. 3, 1939. T. J. NUNAN 2,142,254

ELECTRIC CIRCUIT CONTROLLED BY LIGHT CELLS

Original Filed March 5, 1935 2 Sheets-Sheet 2

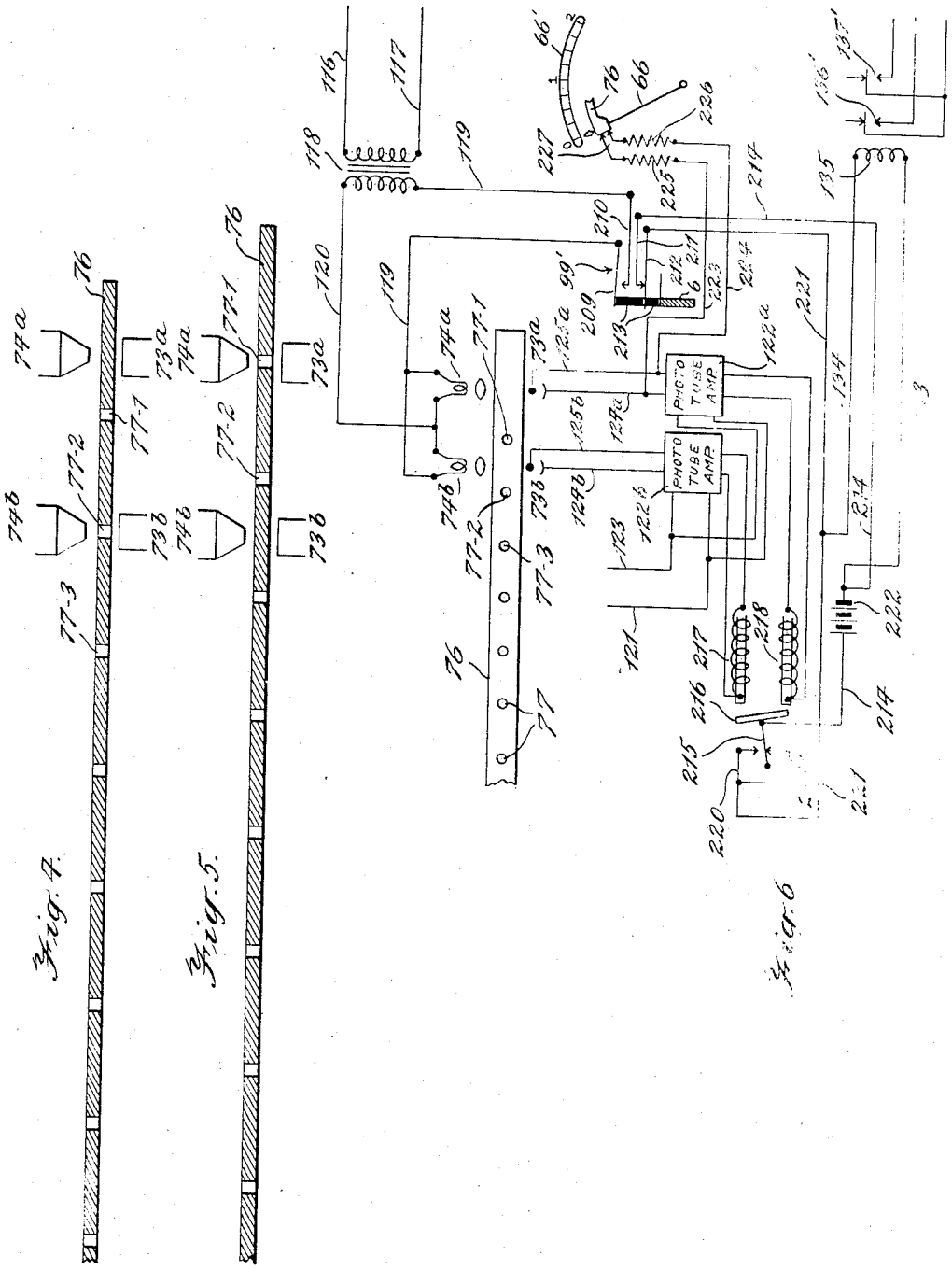

Fig. 4.

Fig. 5.

Fig. 6.

Thomas J. Nunan INVENTOR.

BY Pfifford, Hall & Bunge

ATTORNEYS.

Patented Jan. 3, 1939

2,142,254

UNITED STATES PATENT OFFICE

2,142,254

ELECTRIC CIRCUIT CONTROLLED BY LIGHT CELLS

Thomas J. Nunan, Summit, N. J., assignor to The Clark Thread Company, Newark, N. J., a corporation of New Jersey

Original application March 5, 1935, Serial No. 9,428. Divided and this application March 4, 1937, Serial No. 128,997

7 Claims. (Cl. 250—41.5)

This invention relates to a novel and improved form of electric circuit, more particularly one controlled by light cells. This application is a division of my copending application Ser. No. 9,428, filed March 5, 1935, and the invention will be described in connection with the apparatus shown in the parent application. In the annexed drawings, I have shown a selected embodiment of the invention, and in those drawings:

Fig. 1 is a vertical face view of an apparatus with which the invention may be employed;

Fig. 2 is a detailed view substantially on the line 2—2 of Fig. 1;

Fig. 3 is a view substantially on the line 3—3 of Fig. 1;

Figs. 4 and 5 are views showing diagrammatically certain parts appearing in Fig. 1 when in different positions;

Fig. 6 is a wiring diagram of so much of the circuit as is necessary for an understanding of the invention.

The invention is shown as used in connection with a device for testing thread to the breaking point, successive lengths of thread being thus broken, but it is to be understood that the invention has other uses.

Referring first to Fig. 1, I have shown therein a thread cylinder 1 forming a source of supply for thread to be tested and from which the thread 2 passes through a tension device 3 of any suitable construction and is then carried by a rotary frame 4 to a clamp 5 supported upon a bracket 6 secured to a movable part 7 of a scale 8. The scale is selected as a suitable form of indicator or measuring instrument and may be of any of the well-known forms which may be found suitable for the purpose. Therefore the details of the scale mechanism will not be described except as they are of interest in understanding the invention. The indicating part of the measuring instrument may be omitted entirely for some purposes, and therefore the word "indicator" is used merely for convenience of expression.

For the purpose of convenience I shall refer to the clamp 5 as the indicator clamp, since it moves with the indicator.

The frame 4 is rotatably mounted about its axis 9 on a suitable support 10, here shown in the form of a panel extending upwardly from a base 11, and is operated in a clockwise direction, as viewed in Fig. 1. The rotation of the frame 4 is an intermittent one, which may be caused by any suitable means, the details of which are not necessary to an understanding of the invention claimed herein and which consequently have been omitted.

Rotatably mounted upon the panel 10 is a rock shaft 12 having on the front of the panel a lever 13 secured thereto, and upon the outer end of this lever is a clamp 14 which, for the sake of convenience, I shall refer to as the breaking clamp. The lever 13 is periodically depressed by means of a cam 15 which is operated by a suitable means which, not being necessary to an understanding of the invention, will not be described.

The two clamps 5 and 14 are controlled by means of solenoids 16 which are operated at proper intervals so that, as the frame 4 rotates, it may place within the clamps 5 and 14 a length of thread 2, after which the solenoids are operated to securely clamp the thread in position. When thus clamped, the clamp 14 is stationary and then the cam 15 depresses the lever 13, carrying with it the clamp 14 and thus pulling the bracket 6 downwardly and causing a downward pressure on the movable part of the scale. This in turn will cause movement of the pointer 66 of the scale over the scale face 66'.

Movement of the pointer causes operation of suitable recording apparatus, shown generally at 17, by means of circuits which in turn are controlled by light-sensitive elements such as photoelectric cells indicated at 13*a* and 13*b* adapted to be acted upon by lamps 14*a* and 14*b*, respectively. The cells and lamps are of known or any desirable construction, and their details are not necessary to an understanding of the invention claimed herein.

Secured to the pointer 66 is a shutter 76 which passes between the cells and lamps and which has therein a plurality of holes 77 spaced apart a distance corresponding in number to the units of force shown on the indicator. The shutter is concentric with the center of movement of the pointer, and the arrangement is such that the holes 77 will pass successively between the lamps and cells. The light from either lamp may pass through any hole in the shutter to the cell corresponding to that lamp.

In the parent application and divisional parts thereof I have more fully described and claimed the detailed operation of the testing device, the circuits operated thereby, and the manner in which those circuits operate the recorder. For the purpose of the present application, it will be sufficient to say that the recorder is operated by impulses caused in the controlling circuits by action of light from the lamps upon the photo-

electric cells. It is well known that the action of light on a photo-electric cell will cause an impulse to be sent along a circuit in which that cell is placed, and such impulses are used to operate the recorder.

I have found that for some types of testing apparatus where the units to be measured and recorded are relatively small, or where for any other reason the holes 77 in the shutter 76 are placed close together, and then a vibration occurs which will disturb the relation of the shutter to the lamp and cell, such vibration may cause the shutter to flutter enough to send impulses, by changing the quantity of light reaching the cell.

In this embodiment, I provide the shutter 76 with a hole 77 for each two ounces or units of measurement, thereby cutting down the number of holes by half. The two lamps and their respective cells are so spaced apart lengthwise of the shutter that when one lamp is shining through one of the holes 77, the other lamp has its beam of light directed against an opaque part of the shutter half way between two adjacent holes. In this instance, the center to center spacing of the lamps and cells, respectively, is ½ of the center to center spacing of the holes.

By means that will be explained later, when the scale pointer 66 indicates zero, neither lamp 74*a* nor 74*b* will be lighted, nor in registry with one of the holes, but the end hole 77—1 is disposed between the beams of light from the two lamps, as plainly shown in Fig. 6.

Now as the pointer 66 moves from zero to 1 on the scale face 67, both lamps are lighted, by means to be described later, and the next to the last hole 77—2 will come into registry with the beam of light from the lamp 74*b*, as shown in Fig. 4, and cause this beam to act upon the cell 73*b*. However, the end hole 77—1 will not have reached a position to register with the beam of light from the lamp 74*a*, as shown in Fig. 4.

Then, as the pointer moves to 2 upon the scale face, the end hole 77—1 will be brought to a position to register with the beam of light from the lamp 74*a* and the next hole 77—2 will pass out of registry with the beam from the lamp 74*b*, all as shown in Fig. 5. This operation will be repeated, first one hole coming into registry with one beam of light and then the other hole coming into registry with the other beam of light, either one lamp or the other acting upon its cell for each unit of measurement.

Since the circuit which is now to be described may be used with a wide variety of appliances, it is sufficient to say that electric current for the lamps may be supplied from any suitable source, here shown as two conductors 116 and 117 and a transformer 118, to the secondary of which are connected conductors 119 and 120 for supplying current to the lamps.

Each cell is placed in the input circuit 124*a*—125*a* or 124*b*—125*b* of an amplifier 122*a* or 122*b*, respectively. These amplifiers are connected in parallel to and receive current from the conductors 121 and 123.

In the embodiment being described, I use a double switch indicated generally by the numeral 99′ and controlled by the position of the bracket 6. This switch comprises four spring contacts in what is known as a break-make assembly, these contacts being identified as 209, 210, 211, and 212. When the pointer 66 is at zero, the various contacts have the relation shown in Figs. 2 and 6, namely, the two contacts 209 and 210 are out of engagement with each other, and the contacts 211 and 212 are in engagement with each other, in which position they are held by the bracket, as shown.

Now as the bracket 6 is moved downwardly under the tension of the thread before it breaks, the contact 212 will move out of engagement with the contact 211, and the contact 209 is brought into engagement with the contact 210, the contacts 209 and 212 moving together under their spring actions and through the arrangement of insulating spacers 213. Therefore, as soon as tension on the thread is sufficient to move the bracket 6 downwardly, the result is to open one circuit and close another. The circuit controlled by the contacts 211—212 is a shorting circuit and includes a contact 215 centrally disposed on an armature 216 adapted to be operated by either one of the magnets 217 or 218 connected respectively in the output circuits of the amplifiers 122*b* and 122*a*.

This contact 215 is between and may contact with either one of two spring contacts 219 or 220, both connected to a conductor 221 which leads back to the contact 212. The conductor 214 is in turn connected through a battery 222 to the conductor 133, and the conductor 221 is connected directly to the conductor 134. The conductors 133 and 134 are shown as connected to a magnet 135 controlling the operation of certain switches 136′ and 137′. The magnet is taken as an example of a device to which impulses are to be sent by operation of the shutter, and the device may be used to operate any desired mechanism, such, for example, as a recording apparatus which is shown as being thus operated in said copending application, Ser. No. 9,428.

Connected to the circuits of one of the cells, here shown as the cell 73*a*, are conductors 223 and 224 containing two high resistance units 225 and 226, and the circuit through these resistances comprises a switch 227 which is adapted to be closed by the shutter or pointer when at zero position, as indicated in Fig. 1.

Assuming that the pointer is at zero, then the circuit through the lamps is broken between the contacts 209 and 210, while the contacts 211 and 212, and 215 and 219, are in engagement, respectively. The various holes in the shutter occupy the positions shown in Fig. 6 and the magnets 217 and 218 are deenergized.

As soon as the pointer and shutter have moved a distance corresponding to one unit of measurement, then the next to the last hole 77—2 will come into registry with the lamp 74*b* as previously described, and as shown in Fig. 4, and will thus affect the cell 73*b*, energizing the magnet 217 and attracting the armature 216 to that magnet and away from the magnet 218. This will break the circuit between the contacts 215 and 219 and after a very short interval of time will make a circuit between the contacts 215 and 220. This action will momentarily deenergize the magnet 135 by breaking the circuit through the battery 222 and the magnet, thus permitting the switches 136′ and 137′ to close. When, however, the contact 215 engages the contact 220, the circuit is again completed through the magnet 135 and the battery 222, again opening the switches 136′ and 137′. The result is the sending of an impulse to the magnet 135 and then the immediate breaking of the circuit of that magnet, so that no further impulses may be sent no matter how much the shutter may vibrate. Shortly thereafter the circuit is again closed, but in the meantime the shut-

ter has moved sufficiently so that no hole is in registry with a beam of light or else the shutter has ceased vibrating.

The two magnets 217 and 218 are so constructed that the armature will stay in position against the core of the magnet last energized. Now assuming that the shutter and pointer move a distance corresponding to another unit of weight, the last hole 77—1 will come in registry with the lamp 74a and cell 73a, as shown in Fig. 5, and thus energize the magnet 218, which will cause an impulse to be sent to the magnet 135 in the same manner as just described above, the magnet 217 having been de-energized because of the movement of the shutter to interrupt the beam of light which has previously caused that magnet to be energized.

These operations will be repeated as each hole comes into registry with one of the lamps and its corresponding cell until the thread breaks, and the registry of a hole with a lamp results in only one impulse.

When the thread breaks, the bracket 6 will rise to the position shown in Fig. 6, opening the lamp circuit by moving the contact 209 out of engagement with the contact 210 and closing the shorting circuit by engagement of the contacts 211 and 212.

After the breaking of the thread, the pointer is temporarily held at the position which it occupied when the break took place, after which it is released and allowed to return to zero by the normal means provided by the scale for that purpose. Here again the means for controlling the operation of the pointer after breaking of the thread is not necessary to an understanding of the invention claimed herein and so will not be further described.

While the pointer and shutter are returning to zero, the lamps will thus be extinguished and no light will reach the cells from the lamps and thus no impulses will be sent. As the shutter and pointer reach zero, the switch 227 will be closed, short circuiting the input to the amplifier 122a, causing an impulse of current to flow through the magnet 218 in the same manner as if light reached the cell 73a, and thus causing the armature 216 to return to the position indicated, if not already there. If already there, the short circuiting has no effect.

The above operation is used in order to insure that the armature 216 shall always be at the indicated position when the pointer is at zero.

Assuming that the armature 216 is moved from engagement with the core of the magnet 217 to engage with the core of the magnet 218, or, in other words, to the position indicated, as just described, then that act would cause an impulse to be sent to the magnet 135 unless some means were provided to prevent it. Such means is provided by the shorting circuit comprising the conductor 214, contacts 211 and 212, and conductor 221, thus providing a short circuit between the conductors 214 and 221 and avoiding the sending of any impulse to the magnet 135 through the battery 222.

While I have shown the invention as embodied in a specific form, it is to be understood that various changes in details may be made without departing from the scope of the invention, as defined by the appended claims.

I claim:

1. In combination, an electric circuit including an element adapted to be operated by electrical impulses sent through said circuit, a light-sensitive cell, a lamp so placed that a beam of light therefrom may strike said cell, a shutter adapted to move between said lamp and cell and having a hole therein through which said beam may pass to said cell as the hole is moved through said beam, means operated by the action of the beam on the cell to cause an impulse in said circuit when said beam passes through said hole during said movement of the shutter, and means in said circuit limiting the number of impulses to one impulse for each movement of said hole through said beam of light.

2. In combination, an electric circuit including an element adapted to be operated by electrical impulses sent through said circuit, a light-sensitive cell, a lamp so placed that a beam of light therefrom may strike said cell, a shutter adapted to move between said lamp and cell and having a hole therein through which said beam may pass, and means operated by the action of the beam on the cell to open and close said circuit momentarily to cause an impulse in said circuit to operate said element.

3. In combination, an electric circuit including an element adapted to be operated by electrical impulses sent through said circuit, a light-sensitive cell, a lamp so placed that a beam of light therefrom may strike said cell, a shutter adapted to move between said lamp and cell and having a hole therein through which said beam may pass, and means operated by the action of the beam on the cell to open and close said circuit momentarily to cause an impulse in said circuit to operate said element, said means causing only a single opening and closing of said circuit, thereby insuring the causing of a single impulse only.

4. In combination, an electric circuit including an element adapted to be operated by electrical impulses sent through said circuit, a switch in said circuit comprising two spaced contacts and a movable contact adapted to engage either one of the spaced contacts to close said circuit, said movable contact normally being in engagement with one of said spaced contacts, an armature operatively connected to said movable contact and having two magnets associated therewith, energizing of one magnet causing the movable contact to engage one of the spaced contacts and energizing of the other magnet causing the movable contact to engage the other spaced contact, means to render said lamp inoperative, and means to then return the shutter to initial position, whereby upon said return movement the lamp will not affect the cell.

5. In combination, an electric circuit including an element adapted to be operated by electrical impulses sent through said circuit, a switch in said circuit comprising two spaced contacts and a movable contact adapted to engage either one of the spaced contacts to close said circuit, said movable contact normally being in engagement with one of said spaced contacts, an armature operatively connected to said movable contact and having two magnets associated therewith, energizing of one magnet causing the movable contact to engage one of the spaced contacts and energizing of the other magnet causing the movable contact to engage the other spaced contact, a circuit for each magnet including a light-sensitive cell, a source of light adapted to direct a beam of light to each of said cells, a shutter adapted to cut off said beams from said cells and having holes therein so arranged that a beam of light may pass to first one cell and then the other as the shutter moves past the cells, means

to thus move the shutter, for the purpose set forth, a shorting circuit connected across said movable and spaced contacts and having a switch therein, means to move the shutter back to initial position after its operation, and means to open said switch at the beginning of the operation and to close it at the end thereof, for the purpose set forth.

6. In combination, an electric circuit, two photoelectric cells, each having a lamp associated therewith and each adapted to control said circuit, and a shutter movable between said cells and their associated lamps and having a plurality of holes therein, the spacing of the lamps and cells, respectively, being equal to ¾ of the spacing of said holes.

7. In combination, an electric circuit, two photoelectric cells, each having a lamp associated therewith and each adapted to control said circuit, and a shutter movable between said cells and their associated lamps and having a plurality of holes therein, the spacing of said holes and the spacing of said cells and their associated lamps being such that as the shutter moves between the cells and their lamps a beam of light may pass from one lamp to its cell and at the same time said shutter prevents passage of light from the other lamp to its cell.

THOMAS J. NUNAN.