Sept. 23, 1952 E. JOHANSSON ET AL 2,611,471

MECHANISM FOR SEPARATING SHEETLIKE MATERIALS

Filed May 4, 1950

FIG. 1.

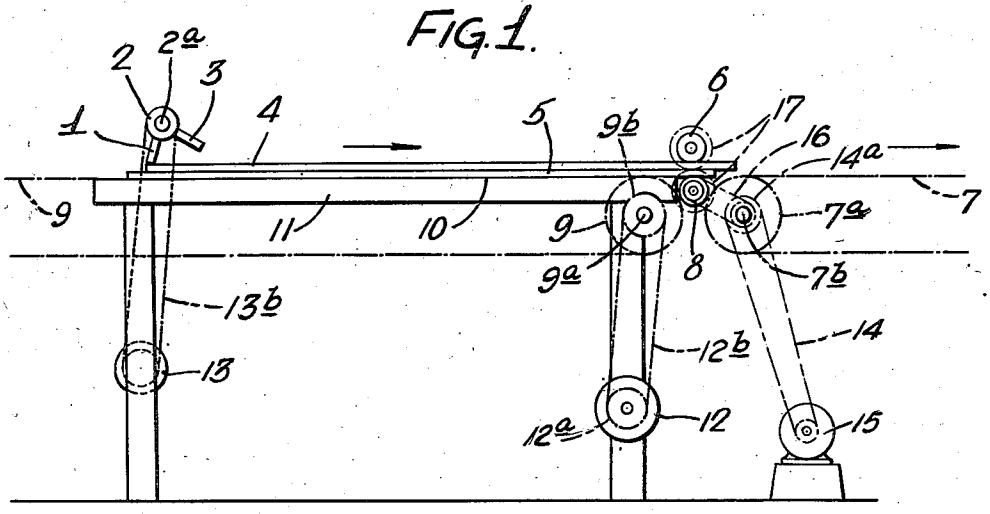

FIG. 2.

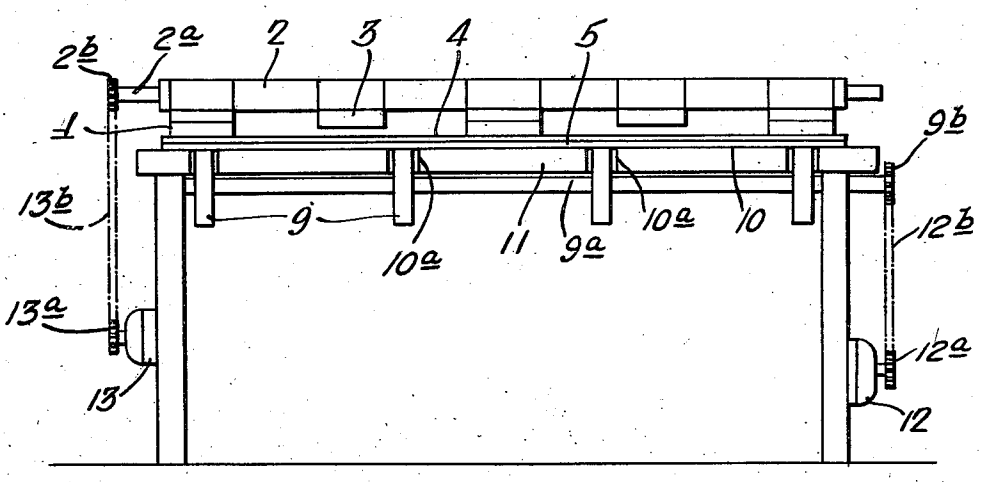

Inventors:
Erik Johansson
Bertil Bergvall
Uno Alfredsson
by their Attorneys
Howson & Howson

Patented Sept. 23, 1952 2,611,471

UNITED STATES PATENT OFFICE

2,611,471

MECHANISM FOR SEPARATING SHEETLIKE MATERIALS

Erik Johansson, Bertil Bergvall, and Uno Alfredsson, Jonkoping, Sweden, assignors to AB Svenska Flaktfabriken, Stockholm, Sweden

Application May 4, 1950, Serial No. 160,014
In Sweden July 12, 1949

2 Claims. (Cl. 198—35)

1

In producing sheet-like materials, for instance plates or sheets manufactured of fibrous materials such as defibrated wood, peat or the like, it is customary for the sheets to be treated in pairs disposed one upon the other with their smooth face surfaces in confronting relation. In this condition the plates or sheets are received in a hardening chamber where they are subjected to heat-treatment to increase their strength and to actuate the finished color of the sheets.

The present invention relates to novel mechanism for separating and feeding such superimposed pairs of sheets or plates. According to the present invention the mechanism comprises, for example, two belt conveyors arranged one after the other in tandem fashion. The first conveyor is associated with a flat table with the terminal end portion of the conveyor disposed substantially in the plane of the table top which is provided with a friction surface or cover. Disposed above the table top is a roller having radially projecting arms which upon rotation of the roller are adapted to engage the uppermost sheet of the pair and slide the same along the surface of the bottom sheet and engage the leading edge of said upper sheet between a pair of driven nip rolls located at the opposite end of the table and operable to feed the uppermost sheet onto the second conveyor. The first conveyor is stopped during separation and feeding of the upper sheet so that the lower sheet remains in position upon the table top. However, when the upper sheet has been separated and fed to the desired extent onto the second conveyor the first conveyor is again actuated to feed the leading edge of the bottom sheet between the nip rolls whereupon the latter operate to feed the bottom sheet onto the second conveyor.

A preferred embodiment of the present invention and various features and details of the construction and operation thereof are hereinafter fully set forth and described and shown in the accompanying drawing, in which:

Fig. 1 is a side elevational view of apparatus made according to the present invention; and

Fig. 2 is an end elevational view of the apparatus as viewed from the left hand side of Fig. 1.

Referring now more particularly to the drawing, the relatively superimposed pair of sheets to be separated and fed in the manner previously described are designated by reference numerals 4 and 5. Formed longitudinally in the top 10 of a table 11 at uniformly spaced intervals transversely thereof are elongated slots or openings

2

10a in which are disposed the terminal end portions of the upper course of a plurality of endless belts 9 of a conveyor assembly. At the end of their upper course the endless belts 9 pass about suitable pulleys which are secured upon a shaft 9a which extends transversely of the table 11 at the underside thereof and adjacent the forward or discharge end of the table. The shaft 9a has mounted on one end thereof a sprocket 9b which is driven by a chain 12b from a sprocket 12a on the shaft of an electric motor 12.

Mounted transversely above the table top 10 adjacent the sheet-receiving end thereof is a roller 2 having radially projecting fingers or flaps 1 and 3 which are composed of resilient material such as, for example, rubber. The roller 2 is fixedly mounted upon a transverse shaft 2a having a sprocket 2b thereon which is driven, for example, by a chain 13b from a sprocket 13a on the shaft of the electric motor 13. The projecting fingers or flaps 1 and 3 of the roller 2 are constructed and arranged upon rotation of said roller to engage the uppermost sheet 4 of a pair of sheets deposited on the table top 10 by the conveyor belts 9 to advance the upper sheet 4 relative to the bottom sheet 5 and engage the leading edge of said upper sheet 4 between a pair of nip rolls 6 and 8.

The nip rolls 6 and 8 are disposed one above the other and extend transversely of the table 11 adjacent the discharge end thereof, the nip rolls 6 and 8 being positioned vertically with respect to the table top 10 so that the nip of said rolls is approximately in the plane of the table top 10.

At the opposite side of the nip rolls 6 and 8 from the table 11 there is provided a second belt conveyor 7 which has its upper course extending approximately in the plane of the table top 10 and the nip of the rolls 6 and 8. The receiving end of the second conveyor 7 passes about one or more pulleys or wheels 7a mounted on a shaft 7b which extends transversely of and adjacent the discharge end of the table and this shaft 7b may be driven by a chain 14 and sprocket 14a from a separate source of rotary power such as an electric motor 15.

In accordance with the present invention, the nip rolls 6 and 8 are positively driven and this may be accomplished, for example, by means of a conventional chain drive 16 from the second conveyor shaft 7b to the roll 8 and from the latter by means of gears 17 to the roll 6.

According to the invention, travel of the conveyor belts 9 is stopped for a preselected interval

of time after each pair of sheets 4 and 5 is delivered by said conveyor onto the table top 10. To this end mechanism (not shown) is provided for stopping the motor 12 at the desired instant and for starting it again at the proper time. Such mechanism may be either a simple manually operated "off"-"on" switch of any well-known type to be manipulated by the operator of the machine, or the mechanism may comprise any well-known automatic control for turning the motor 12 "off" and then "on" such as, for example, limit switches properly located for actuation by the sheets to stop and start the conveyor 9 at the desired times. Such mechanisms are, of course, well-known and understood in this and other arts and in view of their common usage it is deemed unnecessary to illustrate and describe a typical arrangement.

In operation of the apparatus of the present invention, a pair of relatively superimposed sheets 4 and 5 is delivered by the conveyor belts 9 onto the top 10 of the table 11 with the bottom sheet 5 resting upon the friction surface of the table. When the superimposed sheets 4 and 5 are properly positioned on the table top 10 the conveyor belts 9 are stopped by either manually or automatically shutting off the driving motor 12 as previously described. At this time the radial fingers or flaps 1 and 3 on the driven roller 2 engage the upper sheet 4 and slide the same upon the bottom sheet 5 to engage the leading edge of the upper sheet 4 between the driven nip rolls 6 and 8 which thereupon operate to feed the upper sheet onto the second conveyor 7. When the desired extent of separation or offset of the upper sheet 4 with respect to the lower sheet 5 is obtained the conveyor 9 is again placed in operation thereby feeding the leading edge of the bottom sheet 5 between the driven nip rolls 6 and 8 so that the latter operate to feed the sheets 4 and 5 onto the second conveyor 7 with the desired amount of separation or offset of the sheet 4 with respect to the sheet 5.

It will be understood that the amount of relative separation or offset of the upper sheet with respect to the lower sheet depends upon the length of time that the conveyor 9 is stopped after each pair of sheets is delivered to the table and this time may be varied as desired to effect delivery of a pair of sheets with a very small amount of relative offset or separation of the upper sheet with respect to the lower sheet as shown in the drawing, or to separate and feed entirely the upper sheet 4 onto the second conveyor 7 before the lower sheet 5 is advanced to the nip rolls 6 and 8.

While a particular embodiment of the invention has been shown and described herein, it is not intended to limit the invention to such disclosure within the scope of the following claims.

What we claim is:

1. Sheet separating and feeding apparatus comprising a table structure having a plane top surface, a first conveyor assembly having the terminal end portion of its upper course extending substantially in the plane of said table top to deliver and deposit onto the table top a pair of superimposed sheets, means to stop said conveyor after depositing a pair of sheets on said table top, a second conveyor extending endwise from the terminal end of the first conveyor, a pair of vertically arranged nip rolls mounted intermediate the table and the adjacent end of the second conveyor, drive means for said second conveyor and the nip rolls, and a rotary member adjacent the receiving end of the table operable during idleness of the first conveyor to advance the upper sheet of said pair and engage the leading edge thereof between the nip rolls which operate to feed said upper sheet onto the second conveyor, said stop means for the first conveyor being operable to re-start the first conveyor after a preselected interval of time to cause the same to advance the bottom sheet and engage its leading edge with the nip rolls and feed said bottom sheet onto the second conveyor.

2. Sheet separating and feeding apparatus comprising a table structure having a plane top surface provided with a plurality of longitudinally extending slots therein, a first conveyor assembly comprising a plurality of endless belts each having the terminal end portion of its upper course disposed in one of said slots and extending substantially in the plane of said table top to deliver and deposit onto the table top a pair of superimposed sheets, means to stop said conveyor after depositing a pair of sheets on said table top, a second conveyor extending endwise from the terminal end of the first conveyor, a pair of vertically arranged nip rolls mounted intermediate the table and the adjacent end of the second conveyor, drive means for said second conveyor and the nip rolls, and a rotary member adjacent the receiving end of the table having resilient fingers operable during idleness of the first conveyor to advance the upper sheet of said pair and engage the leading edge thereof between the nip rolls which operate to feed said upper sheet onto the second conveyor, said stop means for the first conveyor being operable to restart the first conveyor after a preselected interval of time to cause the same to advance the bottom sheet and engage its leading edge with the nip rolls and feed said bottom sheet onto the second conveyor.

ERIK JOHANSSON.
BERTIL BERGVALL.
UNO ALFREDSSON.

REFERENCES CITED

The following references are of record in the file of this patent:

UNITED STATES PATENTS

Number	Name	Date
1,248,786	Bachwitz	Dec. 4, 1917
1,298,348	Kane	Mar. 25, 1919
1,631,617	Broadmeyer	June 7, 1927
1,763,308	Horn	June 10, 1930
2,274,075	Bombard	Feb. 24, 1942

FOREIGN PATENTS

Number	Country	Date
528,039	Germany	June 26, 1931