Sept. 5, 1939. C. B. STRAUCH 2,171,770

CIGARETTE TIP

Filed April 20, 1937

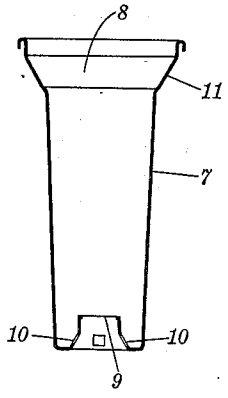

Fig. 1

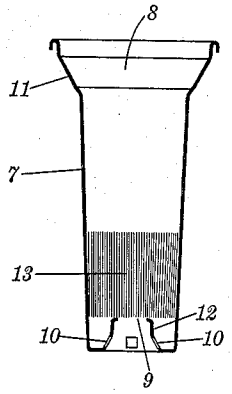

Fig. 2

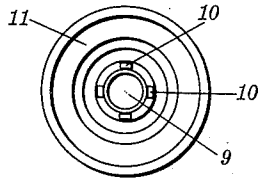

Fig. 3

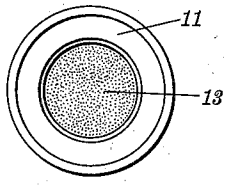

Fig. 4

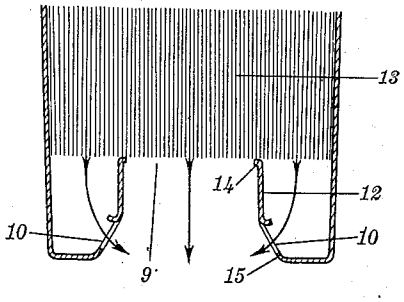

Fig. 5

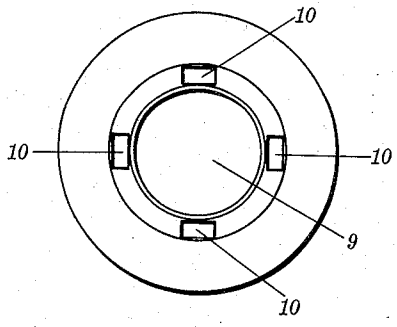

Fig. 6

Claus Burkat Straub INVENTOR.

BY Seymour, Bright & Nottingham

ATTORNEYS

Patented Sept. 5, 1939

2,171,770

UNITED STATES PATENT OFFICE

2,171,770

CIGARETTE TIP

Clauss Burkart Strauch, New York, N. Y., assignor to Hartford-Empire Company, Hartford, Conn., a corporation of Delaware

Application April 20, 1937, Serial No. 138,024

1 Claim. (Cl. 131—52)

This application is a continuation in part of my co-pending application Serial No. 56,904 filed Dec. 31, 1935, now Patent No. 2,097,846, and relates to improvements in cigarette tips adapted to prevent contact between the mouth and a cigarette and to purify the smoke.

Heretofore cigarette tips have been devised consisting of constructions using a metal, horn, plastics, cardboard or combinations of those and other materials. Such structures have an undesirable appearance in use, are apt to cause damage to the teeth in view of the inherent stiffness of the material, are expensive thus necessitating repeated use which is objectionable from medical standpoint as well as from the point of view of the user and are of such length and weight as to require considerable effort to hold the tip in place.

In such distances, in which cigarette tips were devised to include a filtering means, the cost of tips and filters necessitated repeated use of the same filter, rendering the purification of the smoke uneven and increasingly less effective, adding a sharp taste to the smoke with each successive cigarette smoked, and even reversing the initial filtering effect after repeated use.

Among the objects of my invention is to provide a cigarette tip made of unoffensive, smooth, and preferably transparent material, which is semiflexible and elastic which may be made so cheaply and simply that it need be used only once; and which is of so little weight that it can be held in the mouth for a substantial time without discomfort.

While all tips of the prior art, by reasons of their structure and if used but once, purify cigarette smoke to some minor extent by a cooling and condensing action upon the smoke, it is an essential part of my invention to provide a special filter within my tips, capable of absorbing and/or adsorbing and/or otherwise filtering nicotine, and other undesirable or obnoxious constituents of the smoke. The tips including the filtering means are preferably also to be discarded, together with the stub of the cigarette, after each smoke.

Heretofore filters have been devised consisting of perforated cartridges containing iron hydroxide, silica-gel, carbon or other adsorbent materials; of cotton, plain, or frequently impregnated with biting, irritating, or dusty chemicals; and of loosely wound paper, having a very low filtering effect. The filters were frequently constructed as exchangeable units adapted for insertion into bulky holders, and subject to all disadvantages of repeated use and inconvenience enumerated above. Other filters were constructed as part of the cigarette, eliminating repeated use, but having other disadvantages due to the limitations connected with the insufficient space, weak support, an open end, being related to the shape of the cigarette, and being related to and confined by the cigarette manufacturing process.

My invention of a low cost, non-adsorbent, light weight, elastic, transparent cigarette tip, to be used for one smoke only, makes positive filters as part of these tips possible. Such filters are well supported in their place and maintained compressed to a definite extent; have an ample space outside of the body of the cigarette; are held by such shape as to prevent contact between the filter and the mouth; are of low cost and designed for one smoke only; are of a selected fibrous material, optionally treated with selective, absorbing and/or adsorbing chemicals, not dusty, not biting and not removable by water; and are aided by all advantages of the tips made according to my invention, the transparency of the outer shells permitting easy inspection of the filtering effect during smoking.

With the foregoing objects outlined and with other objects in view which will appear as the description proceeds, the invention consists in the novel features hereinafter described in detail, illustrated in the accompanying drawing and more particularly pointed out in the appended claim.

Fig. 1 is an enlarged vertical sectional view of a preferred form of the cigarette tip made according to my invention, and consisting of an outer shell only.

Fig. 2 is an enlarged vertical sectional view of a preferred form of the outer shell of a cigarette tip complemented by a filter.

Fig. 3 is a top plan view of the outer shell of the tip of Fig. 1.

Fig. 4 is a top plan view of the outer shell complemented by a filter.

Fig. 5 is a fragmentary vertical sectional view of a preferred form of the lower end of a tip and filter, shown on an enlarged scale.

Fig. 6 is a bottom plan view of the preferred form of the lower end of the outer shell of a tip, shown on the same scale as Fig. 5.

In the drawing, 7 designates the outer shell of a cigarette tip according to my invention. This tip consists substantially of a cone or tube having an entrance 8 and an exit 9, the latter in its preferred form being surrounded by extra perfora-

tions 10. The cone has in its preferred form a collar 11.

12 represents an annular lip provided at the lower end of the tip and extending into the bore of the shell. The lip 12 supports a filter 13, of adsorbent material which is inserted into the shell and kept in place and under slight, even compression by the side walls of the shell 7. The fibers of the material of the filter 13 are preferably arranged substantially parallel with each other and with the axis of the shell 7.

In Fig. 5, 14 represents the upper free end of the annular lip 12, engaging the filter 13, and 15 the entrance of this lip, in which the perforations 10 are located so as not to come in contact with the mouth. The arrows indicate the flow of the smoke, when the tip is used for smoking.

The shell 7 as illustrated in the figures may be constructed of waxed paper, of cloth impregnated with any thermoplastic material such as shellac or paraffin, of metal foil or any other material which can be formed, molded or pleated into a thin-walled, cone shaped shell.

It is part of my invention to produce cigarette tips as described from transparent organic plastic materials by pressing and pleating the cone on dies and with or without help of heat. Regenerated cellulose or other cellulosic plastic materials used in several layers is easily pressed and pleated between cold or hot dies to cup shape and will keep its shape aided by the insertion of the filter. The use of several layers permits the obtaining of attractive color effects and the utilization of the advantages of regenerated cellulose as well as of the cellulose esters.

I prefer, however, to carry my invention out of forming the tips from thermoplastic material such as cellulose acetate, vinylic or acrylic derivatives, or similar materials according to the process described in my copending application, Serial No. 56,905, filed Dec. 31, 1935. In this process the thermoplastic material, supplied in sheets or rolls of paper to thin cardboard thickness, is guided through a heater, while held against deformation, and quickly moved to cooler dies which form the tips and cool them at the same time. The formed tips are guided further to perforating dies while still an integral part of the original strip to produce the holes 9 and 10, are optionally supplied with the filter 13 in a subsequent station, and finally blanked out on the outer circumference of the collar 7 as finished units from the strip. For manufacture of cigarette tips, the application of glue, as described in said application, Serial No. 56,905, can be omitted, and the optional filter is preferably inserted from a parallel fibered coil of cotton but cutting the proper length of each filter and inserting the same into each formed and perforated tip.

The finished shells of my cigarette tips, made as here described, represent dainty, elongated, tubular cups, each of an approximate length of 1" and generally weighing about $\frac{1}{10}$ of a gram. These shells are of smooth surface, elastic, easily obtained transparent, and manufactured as described at such low cost, that a sanitary single use is made possible. The shells may be formed from colored material or first formed and then dyed in any suitable manner.

The shells have the purpose of engaging one end of the cigarette, of providing an elastic and smooth mouthpiece and to give form and shape to the filter, when supplied.

The collar 11 serves the purpose of facilitating the adaption to the cigarette. It is preferably enforced by rounding its free edge. Without departing from the principle of my invention, the tips may also be formed without a collar or with a smaller collar and may be longer or shorter.

The annular lip 12 serves the purpose of preventing the cigarettes in unfilled tips or the filters 13 in filled tips from descending into the small ends of the shells and coming into contact with the mouth. The reenforced section 14 is provided at the end of the lip portion 12 the better to accomplish this purpose. The lip 12 may be shorter, be built as a bridge, or be of any desired shape, without departing from the principle of my invention.

The perforations 10 serve the purpose of permitting the drawing of smoke from the whole diameter of the cigarette in plain tips and from the whole diameter of the filter in filtered tips. The perforations are preferably located so as not to come into contact with the mouth, as shown clearly in Fig. 5. My invention includes also the forming of these perforations 10 as slots of the lip 12, the provision of more or less than four in number, and/or the placing of them differently.

It is an essential part of my invention to provide a filter as part of my cigarette tips, which will absorb and/or adsorb nicotine and other undesired constituents of the cigarette smoke without impairing its flavor. I prefer to use cotton as the fibrous material for constructing my filters, and have found that cotton, which is not processed except for mechanical cleaning or little processed only and still containing at least a part of the natural fatty substances such as virgin cotton or the unbleached cotton of the trade is superior to processed and so-called absorbent cotton which probably will absorb moisture rather than the other constituents of the smoke.

I found further, that a filter containing a small but compressed amount of cotton would be as effective as a filter containing a large amount of loose cotton, and have the advantage of not impairing the flavor. For such a filter it is necessary to control carefully the degree of compression by checking the negative pressure necessary to draw smoke through the filter and to keep the compression of the fibers constant so as not to make the smoking through the filter tips uncomfortable and difficult. A sucking effort equal to a negative pressure of approximately 20 cm. water is still comfortable and well able to overcome the resistance of a filter made according to my invention. I have found furthermore, that my tips lend themselves very well to the holding of a predetermined amount of cotton at a constant rate of compression when the cotton is composed of parallel fibers arranged parallel to the axis of the outer shell. I prefer therefore to form the filters of the cigarette tips made according to my invention from cotton, preferably little or not chemically processed, arranged with the fibers parallel and held under a slight compression by the walls of the lower halves of the outer shells.

In the first portion of this specification, I have set forth the advantages of the invention over the prior art. While I have disclosed what I consider to be some preferred embodiments of the invention in such manner that the same may be readily understood by those skilled in the art, it is manifest that changes may be made in the details disclosed without departing from the spirit of the invention as expressed in the claim.

What I claim and desire to secure by Letters Patent is:

A filtering cigarette tip, comprising a substantially tubular shell of organic plastic material, one end of which is adapted to receive a cigarette, an annular lip formed of the material of the shell extending inwardly from the other end of said shell and having an aperture at its inner end substantially smaller than the cross-sectional area of said shell, a filter disposed in said shell bearing against the inner end of said lip, and one or more apertures formed in the side of said lip inwardly of the adjacent end of said shell and so positioned as to permit smoke to be drawn from a cigarette by the user throughout substantially the entire cross-sectional area of said filter.

CLAUSS BURKART STRAUCH.