PCT WORLD INTELLECTUAL PROPERTY ORGANIZATION
International Bureau

INTERNATIONAL APPLICATION PUBLISHED UNDER THE PATENT COOPERATION TREATY (PCT)

(51) International Patent Classification 5 : G01N 35/00, G06F 15/00 — A1

(11) International Publication Number: WO 95/02189

(43) International Publication Date: 19 January 1995 (19.01.95)

(21) International Application Number: PCT/US94/06459

(22) International Filing Date: 9 June 1994 (09.06.94)

(30) Priority Data:
08/088,144 7 July 1993 (07.07.93) US

(71) Applicant: ABAXIS, INC. [US/US]; 1320 Cheasapeake Terrace, Sunnyvale, CA 94089 (US).

(72) Inventor: DORITY, Douglas, B.; 25 Castle Rock Drive, Mill Valley, CA 94941 (US).

(74) Agents: HESLIN, James, M. et al.; Townsend and Townsend Khourie and Crew, Steuart Street Tower, 20th floor, One Market Plaza, San Francisco, CA 94105 (US).

(81) Designated States: AU, BR, CA, FI, JP, KR, NO, RU, European patent (AT, BE, CH, DE, DK, ES, FR, GB, GR, IE, IT, LU, MC, NL, PT, SE).

Published
With international search report.
Before the expiration of the time limit for amending the claims and to be republished in the event of the receipt of amendments.

(54) Title: SYSTEM AND METHOD FOR INCORPORATING ANALYTICAL INSTRUMENTS WITHIN PERSONAL COMPUTERS

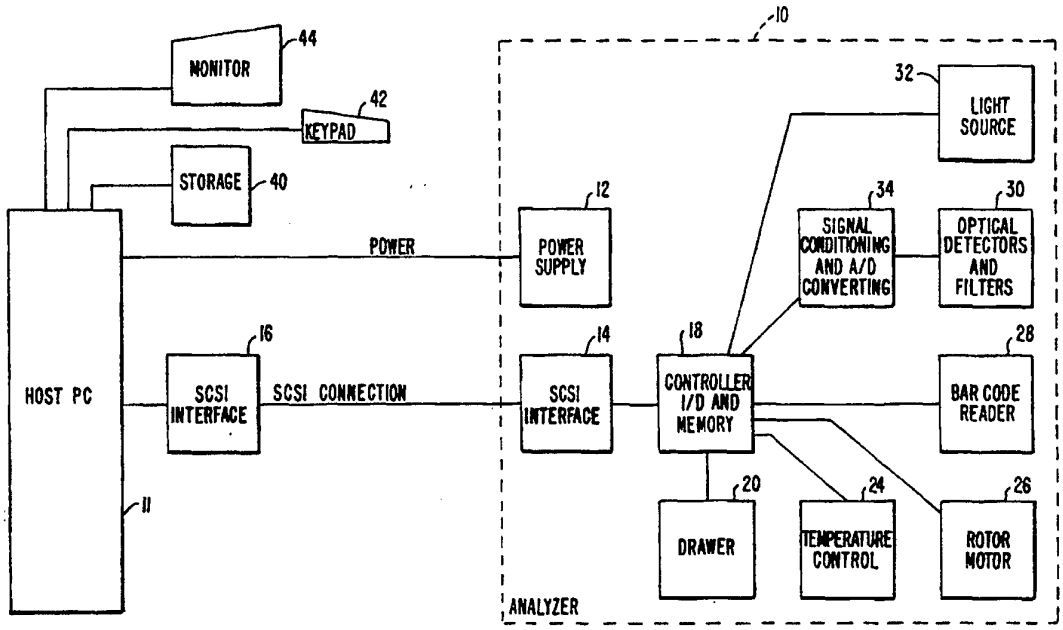

(57) Abstract

An analytical system comprises a general purpose computer (11) and an analytical module (10) which is received within an expansion receptacle of the computer. The analytical module (10) is adapted to receive a specimen, such as a biological, chemical, physical, or other specimen, representing an analyte or other characteristic to be determined. The sample undergoes analytical testing within the module (10), and an output signal is transferred back to the general purpose computer (11). All control functions of the analytical module (10) can be effected through the general purpose computer (11), conveniently using the keyboard (42) and display terminal (44) of the computer (11).

FOR THE PURPOSES OF INFORMATION ONLY

Codes used to identify States party to the PCT on the front pages of pamphlets publishing international applications under the PCT.

AT	Austria	**GB**	United Kingdom	**MR**	Mauritania
AU	Australia	**GE**	Georgia	**MW**	Malawi
BB	Barbados	**GN**	Guinea	**NE**	Niger
BE	Belgium	**GR**	Greece	**NL**	Netherlands
BF	Burkina Faso	**HU**	Hungary	**NO**	Norway
BG	Bulgaria	**IE**	Ireland	**NZ**	New Zealand
BJ	Benin	**IT**	Italy	**PL**	Poland
BR	Brazil	**JP**	Japan	**PT**	Portugal
BY	Belarus	**KE**	Kenya	**RO**	Romania
CA	Canada	**KG**	Kyrgystan	**RU**	Russian Federation
CF	Central African Republic	**KP**	Democratic People's Republic of Korea	**SD**	Sudan
CG	Congo			**SE**	Sweden
CH	Switzerland	**KR**	Republic of Korea	**SI**	Slovenia
CI	Côte d'Ivoire	**KZ**	Kazakhstan	**SK**	Slovakia
CM	Cameroon	**LI**	Liechtenstein	**SN**	Senegal
CN	China	**LK**	Sri Lanka	**TD**	Chad
CS	Czechoslovakia	**LU**	Luxembourg	**TG**	Togo
CZ	Czech Republic	**LV**	Latvia	**TJ**	Tajikistan
DE	Germany	**MC**	Monaco	**TT**	Trinidad and Tobago
DK	Denmark	**MD**	Republic of Moldova	**UA**	Ukraine
ES	Spain	**MG**	Madagascar	**US**	United States of America
FI	Finland	**ML**	Mali	**UZ**	Uzbekistan
FR	France	**MN**	Mongolia	**VN**	Viet Nam
GA	Gabon				

SYSTEM AND METHOD FOR INCORPORATING ANALYTICAL INSTRUMENTS WITHIN PERSONAL COMPUTERS

BACKGROUND OF THE INVENTION

1. Field of the Invention

The present invention relates generally to analytical devices and methods, and more particularly to modules for analyzing chemical and biological specimens which are located within conventional expansion receptacles of general purpose computers.

A wide variety of instruments and devices have been developed over the years for quantitative analysis for chemical and biological specimens. Such instruments and devices often employ spectrophotometers, fluorometers, light-sensitive detectors, radioactivity counters, magnetometers, galvanometers, reflectometers, ultrasonic detectors, temperature detectors, pressure detectors, mephlometers, electrophoretic detectors, and similar detectors, which respond to some characteristic of the specimen being tested and produce an electronic output signal. Such detectors are frequently used in conjunction with a primary analytical unit where the specimen undergoes a chemical reaction, immunological reaction, physical separation, or the like, where the characteristic which is detected by the detector is produced. Such characteristics include light absorption, color, fluorescence, chemiluminescence, radioactivity, chromatographic banding, electrical potential, electrical impedance, electrical charge, density, temperature, pressure, and the like. By combining the detector with the primary analytical unit, an electronic signal corresponding to the characteristic of the specimen can be produced.

In an effort to improve efficiency, such analytical instruments and devices have often been automated to analyze one or more specimens and report the results such analysis with minimum human intervention.

Frequently, such analytical instruments have been provided with dedicated microprocessors and input/output devices which permit direct interface with the user. Often, the user need only introduce the sample, initiate the analytical cycle, and wait for the result to be reported on a screen or other output device. While such automated analytical devices have been successful, they suffer from being relatively expensive and are generally capable of performing only a single or very limited number of tasks. It would be desirable to provide such automated analytical equipment without the need to incorporate dedicated microprocessors and peripheral capabilities.

In an effort to employ standard "off-the-shelf" computers, such as IBM-compatible personal computers, Apple® computers, and computing work stations, certain analytical instruments have been provided with standard interfaces for interconnection with such computers. While the details may vary from device to device, the interconnection will usually permit some or all functions of the analytical instrument to be controlled by the user through the keyboard or other input device of the conventional computer. An analytical signal from the detector will be fed back to the conventional computer, allowing data collection, storage, and reporting to be done through the computer.

While a significant improvement over non-automated equipment and dedicated automated equipment, the need to provide a separate analytical instrument or "box" in addition to the computer can require a significant amount of space. This can be problematic, particularly in laboratories and physicians' offices where space is often very limited.

It would therefore be desirable to provide an improved analytical apparatus which is automated, but which does not require a dedicated microprocessor, input/output means, or the like. It would be further

desirable to provide such analytical apparatus which can interface directly with a general purpose computer, but which does not require additional space or external connections. It would be particularly desirable if such apparatus could directly utilize other computer components, such as the power supply, avoiding the need to duplicate these system components. These and other objectives will be met by the present invention, as discussed in more detail hereinafter.

2. **Description of the Background Art**

U.S. Patent No. 5,154,889, describes a chemical analyzer incorporating a microprocessor and having a slot for receiving a magnetic data storage disk. Chemical analyzers which include and/or which may be interfaced with external computers are described in U.S. Patent Nos. 5,147,610; 5,104,807; 5,096,670; 5,051,238; 5,049,359; 4,678,752; and 3,939,095. A report of the Manufacturers Compatibility Committee entitled "2.5 Hard Mount Specification, Rev. C, 4/29/92" describes a proposed standard for 2.5 inch hard disk drive modules.

SUMMARY OF THE INVENTION

The present invention comprises apparatus and methods for automated specimen analysis, particularly for analysis of biological and chemical specimens. The apparatus and methods rely on interfacing an analytical module with a general purpose computer of the type which includes an expansion receptacle, a power interface, and a signal interface. The expansion receptacle would normally receive a memory device, such as a magnetic disk drive, a compact disk drive, or the like, and the analyzer module will be configured to be received wholly or partially within the receptacle and to interface with the standard connections within the computer provided for the memory device or other internal hardware. The analytical module will further be configured to receive a specimen when the module is in place within the computer, thus permitting the general purpose computer to be used

as a specialized analytical instrument while retaining its ability to function as a conventional computer.

The use of such specially configured analytical modules enjoys a number of advantages when compared to previous analytical devices having dedicated microprocessors and/or stand-alone devices which can interface with conventional computers. The present invention provides an analytical system having a very compact size, usually being no larger than the general purpose computer itself. The system requires no external connections, further reducing clutter at the work site and reducing the possibility of connections being accidentally broken. The system cost will be reduced since most of the hardware is provided by the off-the-shelf computer and further since the module requires a minimum of external structure for support and protection. Additionally, the architecture of the analytical module can be varied widely, with any number of functions (other than specimen handling and analysis) being potentially transferred to the computer itself.

In a first aspect of the present invention, an analyzer module includes a frame having external dimensions which permit it to be mounted within the expansion receptacle of a general purpose computer. Usually, the expansion receptacle will be provided by and located within the computer itself, but may also be provided by a separate memory expansion box. The frame will include a means for receiving a specimen, such as a spindle for receiving an analytical rotor. The frame will further includes means for producing an output signal in response to a characteristic of the specimen, such as a light source and light-sensitive detector which can spectrophotometrically analyze cuvettes present in the exemplary analytical rotor. The frame will further include a power interface and a signal interface, both of which allow the analyzer module to be interconnected with

the general purpose computer in a manner analogous to the interconnection of a memory device.

In a second aspect of the present invention, computer systems are provided which incorporate an analytical module, as just described, in an expansion receptacle thereof.

In a third aspect of the present invention, a method for modifying a general purpose computer comprises inserting an analyzer module into an expansion receptacle thereof. The module includes means for analyzing a specimen to produce an output signal in response to a characteristic of the specimen, and the analyzing means is connected to a power interface and signal interface within the computer. In this way, the analyzer module can be controlled by a user employing the conventional input/output capabilities of the general purpose computer.

In a fourth aspect of the present invention, a method for analyzing a specimen comprises introducing the specimen into an analyzer module which is present within an expansion receptacle of a general purpose computer. The analyzer produces an output signal which is characteristic of a property of the specimen, and the output signal is processed using a processor of the computer. The specimen is usually a liquid specimen, more usually a biological specimen, such as blood. The output signal is produced by a detector within the analytical module, frequently a spectrophotometer which produces an analog signal which is converted to a digital signal prior to being transferred to the computer.

BRIEF DESCRIPTION OF THE DRAWINGS

Fig. 1 is a block diagram illustrating a computer system according to the present invention comprising an analyzer module having power and signal interconnections to a general purpose host computer.

Fig. 2 illustrates the internal configuration of an IBM-compatible personal computer having an

analytical module according to the present invention mounted therein.

Fig. 3 illustrates a conventional, full-height magnetic disk drive housing which is free of internal components other than a connector interface located at its rear end.

Fig. 4 illustrates the housing of Fig. 3, including a chromatographic unit and motor drive mounting structure constructed in accordance with the principles of the present invention mounted therein.

Fig. 5 is similar to Fig. 4, further illustrating the motor drive unit and an encoder on the motor drive mounting structure.

Fig. 6 is similar to Fig. 5, further illustrating a sliding drawer mounted over the motor drive unit and chromatographic unit.

Fig. 7 is a view similar to Fig. 6, further illustrating a thermal chamber mounted on the sliding drawer.

Fig. 8 is a view similar to Fig. 7, further illustrating a light source which is used with the spectrophotometer.

Fig. 9 is a view similar to Fig. 8, illustrating the presence of a removable analytical rotor on the sliding drawer.

Fig. 10 is a flow chart setting forth the analytical rotor handling steps of an exemplary method of the present invention.

Fig. 11 is a flow chart setting forth the measurement sequence of an exemplary method of the present invention.

DESCRIPTION OF SPECIFIC EMBODIMENTS

The apparatus and methods of the present invention are intended for use in combination with a general purpose computer. The phrase "general purpose computer" is means to include a wide variety of desktop computers, personal computers, computing work stations,

and the like, which are configured to operate with standard operating systems and which include dedicated digital processors, usually microprocessors. Such general purpose computers will further include input/output connectors for a variety of peripheral devices, such as keyboards, modems, display screens, external memory devices, printers, pointing devices (mouses), and the like. An exemplary, but non-exhaustive listing of general purpose computers meeting these requirements would include personal computers, such as those manufactured by the International Business Machine Co. as well as numerous other manufacturers producing "IBM-compatible" personal computers, Macintosh® computers, manufactured by Apple Computer Co., and various workstations manufactured by Sun Microsystems, Inc., Hewlett-Packard Co., Digital Equipment Corporation, and others.

Of particular interest to the present invention, such general purpose computers will also include expansion receptacles intended to receive one or more of a variety of standardized components, particularly magnetic memory drives, compact disk (CD) drives, and the like. While the exact nature of such expansion receptacles may vary depending on computer manufacturer, type of component to be inserted, and the like, particular classes of such expansion receptacles will generally be standardized (i.e., have specific dimensions) to receive housings of particular dimensions and to permit signal and power interconnection through standard connector means on such housings. In some cases, it may be necessary to provide or form an opening slot or aperture in the computer housing in order to access an enclosed expansion bag, although it will generally be preferred to use expansion bags having preformed access openings in the housing. Detailed specifications for an exemplary 2-1/2 inch diameter disk drive housing for the IBM-compatible personal computers

are provided in a report issued by the Manufacturers Compatibility Committee designated "2.5 Hard Mount Specification, Rev. C, 4/29/92" which provides exact dimensions for a new standard hard disk drive unit. It will be appreciated that present "standards" for 3.5 inch and other disk drives have evolved over time and can be determined by taking measurements from commercially available computers. The present invention does not depend on any particular standard, but rather on the fact that present standards exist and others will be developed in the future that permit the construction of compatible analytical modules.

Such expansion receptacles will usually be found within the computer itself, *i.e.*, being internal to the computer housing which includes the microprocessor. Expansion receptacles may also be found in external housings which may be externally connected to a computer when all internal expansion receptacles are full, or when for any reason it is desired not to use an internal expansion receptacle. It will be appreciated that the analytical modules of the present invention may also be inserted into such external expansion receptacles. While the use of an external expansion receptacle will not meet all of the objectives of the present invention, i.e., a separate housing requiring additional storage space and external connections will be required, other objectives will be met. In particular, analytical capability may be provided with a general purpose computer using the standardized analytical module of the present invention.

The analytical modules of the present invention can be configured to receive and analyze a wide variety of specimens and samples. Usually, samples will be biological specimens from a patient, but may also be a wide variety of other biological, chemical, environmental, and other specimens having an analyte to be determined. Samples will usually be liquid (or liquified prior to testing), and frequently will undergo

a chemical or immunological reaction prior to analysis. Conveniently, the analytical module of the present invention may provide for such chemical or biological reaction, as well as for other manipulations of the sample, e.g. separation of the sample into one or more components. Analysis according to the present invention may be achieved by a wide variety of known analytical techniques, such as spectrophotometry, fluorometry, radiometry, magnetometry, galvanometry, reflectrometry, ultrasonic detection, mephelometry, electrophoretic measurement, temperature measurement, pressure measurement, and the like. In the exemplary embodiment described herein, detection is effected spectrophotometrically, where a blood sample is first separated by spinning in an analytical rotor *in situ* within the module. Chemical analysis of a plurality of aliquots of the resulting plasma are performed in peripheral cuvettes within the rotor, and all functions of the module are controlled by the associated general purpose computer.

The present invention is useful for analyzing a wide variety of analytes in virtually any type of sample which is solid, liquid, which can be liquified, or which can be suspended in a liquid. The method and apparatus will find the greatest use with biological specimens, such as blood, serum, plasma, urine, cerebral fluid, spinal fluid, ocular lens liquid (tears), saliva, sputum, semen, cervical mucus, scrapings, swab samples, and the like. Use will also be found with industrial, environmental, and food samples, such as water, process streams, milk, meat, poultry, fish, condition media from cell culture, and the like. Under certain circumstances, it may be desirable to pretreat the sample, such as by liquification, separation, dilution, concentration, filtration, chemical treatment, or a combination thereof, prior to introduction of the sample to the analytical module of the present invention. The selection and

pretreatment of biological, industrial, and environmental samples, prior to analytical testing is well known in the art and need not be described further. The analyte to be detected may be virtually any compound, composition, aggregation, or other substance which may be chemically, physically, or immunologically detected. That is, the analyte, or portion thereof, may be analyzed using predictable chemical reactions to produce a detectable reaction product or may be physically separated based on known physical characteristics of the analyte to permit its detection. Additionally, other analytes may be immunologically detectable, having usually be antigenic or haptenic having at least one determinant site. A non-exhaustive list of exemplary analytes is set forth in U.S. Patent No. 4,366,241, at column 19, line 7 through column 26, line 42, the disclosure of which is incorporated herein by reference.

In addition to biological, chemical, environmental, and other specimens described above, the analytical module of the present invention can be adapted to receive other articles and substrates which have been produced in response to analysis of a primary specimen. For example, chemical and biological analyzers can produce photographic images, such as a film specimen as described in U.S. Patent No. 5,049,359, the disclosure of which is incorporated herein by reference. It would also be possible to insert other analytical substrates, such as polyacrylamide gels, nitrocellulose blots, and the like, for automated analysis. It would further be possible to introduce whole organisms (e.g., microbiological specimens) or portions thereof (e.g., a finger for automated blood pressure, blood oxygen, etc. measurement) to a module according to the present invention.

Analytical modules according to the present invention will usually include a detector which produces an output signal, usually an analog signal but in some

cases a direct digital signal, in response to a characteristic of the specimen being analyzed. Most commonly, the detectors will be spectrophotometers, magnetometers, acoustic detectors, radiation monitors, electrical impedance detectors, electrical potential detectors, electrical charge detectors (galvanometers), thermometers, pressure detectors, or the like, which produce an analog voltage or current signal. Direct digital signals can be produced, particularly in the case where emitted light is being detected, using conversion circuitry, such as charge-coupled devices (CCDs).

Referring now to Fig. 1, a block diagram illustrating a computer system comprising an analytical module according to the present invention in combination with a general purpose host computer is illustrated. The components of the analytical module 10 are shown within the broken line and include power supply 12 which receives power directly from the host computer, typically via a standard four-pin plug providing ±5V and ±12V. Power supply 12 converts the incoming line power to whatever is necessary for the remaining components of the analytical device 10, usually ±5V and ±12V.

A standard SCSI interface 14 (or equivalent IDE or other interface) is provided for signal interconnection between the module 12 in the host PC. This SCSI interface 14 connects directly to an SCSI interface 16 on the host computer. The interface 14, in turn, is connected to a microprocessor 18 within the analytical module, which microprocessor provides all control functions for the internal components of the analytical module 10 under the supervision of the host computer. In particular, the microprocessor 18 control a drawer 20, for receiving an analytical rotor 22 (Fig. 9), a temperature controller 24 (Fig. 8), a rotor motor 26 (Fig. 5), a bar code reader (not illustrated elsewhere), optical detectors and filters (which are part of the spectrophotometer 30 (Fig. 4)), and a light source 32

(Fig. 8). Circuitry 34 is provided for analog-to-digital (A/D) converting and signal conditioning between the spectrophotometer 30 and the microprocessor 18. All other components may be controlled by direct digital signals.

The general purpose host computer 11 will be conventional, including at least the SCSI or other standard interface 16, memory storage 40, a keyboard 42, and a display screen or monitor 44. The exemplary system will employ an IBM-compatible personal computer, although other personal computers and workstations could also be configured to perform with the analytical module of the present invention.

Referring now to Fig. 2, the analytical module 10 of the present invention can be mounted within a standard sheet metal mounting receptacle 50 located in the front face of the IBM-compatible computer. The computer power supply 52 will be interconnected via cable 54 and the SCSI signals will be routed through the signal bus 56. Optionally, a daughterboard 58 may be mounted on motherboard 60 in order to provide additional signal capabilities for implementing and controlling the analytical functions of the module 10. It will be appreciated that it would also be possible to mount the analytical module 10 partially within the receptacle 50, i.e., so that a portion of the module extends or projects outward from the computer housing or enclosure. In this way, modules which are larger than the receptacle can be constructed while retaining at least most of the benefits of the present invention, i.e., simplified interconnection, reduced footprint, reduced cost, etc.

Referring now to Figs. 3-9, detailed construction of an exemplary analytical module 10 will be described. The analytical module 10 is intended for spectrophotometric analysis of blood samples separated in analytical rotor 22 (Fig. 9) as described above. This description, however, is not meant to be limiting, and it

will be appreciated that the principles of the present invention can be applied to a wide variety of analytical devices and technologies capable of analyzing a wide variety of specimens and samples, as described above.

Referring now in particular to Fig. 3, the analytical module 10 may be incorporated in a housing 70 having dimensions and external connections which are compatible with a particular family of computers. As illustrated, the housing 70 has the dimensions of a full height housing which may be inserted into the memory expansion slot of an IBM-compatible computer, as illustrated in Fig. 2. A standard connector 72 is provided at the rear of the housing to permit interconnection with printed circuit board 74.

Referring now to Fig. 4, a spectrophotometer 30 is mounted within the housing 70 and includes motor housing 78 and optical components 80. The optical components 80, as well as associated electronic components, permit multi-channel spectrophotometric analysis of a light beam passing through a cuvette on rotor 22, as described in more detailed hereinafter. The system 80 includes a plurality of light detectors 82 and a series of beamsplitters 84 which filter the light into desired wavelength ranges. Details for constructing exemplary photometer are described in copending application Serial No. 08/040,549, the disclosure of which is incorporated herein by reference.

Referring now to Fig. 5, a motor drive 26 is mounted in the motor housing 78. The motor 26 drives a spindle 86 which engages and rotates the rotor 22 (Fig. 9).

Referring now to Fig. 6, a drawer assembly 90 is mounted to reciprocate in and out of a slot 92 formed on a front panel 94 of the module 70. The drawer is adapted to removably receive the analytical rotor 22 (when the drawer is pulled out of the module 70) and to

place the rotor over the spindle 86 (when the drawer is pushed back into the module 70).

Referring now to Fig. 7, a thermal chamber 100 is formed over the drawer assembly 90 and includes thermal control means (not illustrated) for attaining a desired temperature during the sample analysis. In the case of human biological samples, such as blood, it will generally be desirable to maintain the temperature at a fixed value to provide stable reaction rates and parameters, typically being within the range from 36°C to 38°C. For other samples and analyses, optimum temperature ranges will be readily known to one skilled in the art.

Referring now to Fig. 8, a light source 32 is mounted on top of the spectrophotometer 30 and aligned to provide an incident light beam downward through the thermal chamber 24. In particular, the light beam will pass through cuvettes 100 on analytical rotor 22, when the rotor is mounted on the spindle 86, as illustrated in Fig. 9.

The system 10 will thus operate by first turning on the general purpose computer 11 and accessing the appropriate software. Particular sequences for operating the exemplary system 10 of the present invention for analyzing a blood sample are set forth in Fig. 10 (where patient data are printed on cards and the system includes a card printer) and Fig. 11 (setting forth the measurement sequences).

The user is able to control operation of the analytical module 10 using keyboard 42 and display monitor 44. The drawer is first opened, permitting analytical rotor 22 to be placed thereon. The drawers then close, and the desired thermal environment initiated using the thermal module 24. After the desired temperature has been reached, rotation of the rotor 22 is initiated to separate previously applied blood into cellular and plasma components. The plasma components

flow into the peripheral cuvettes 100, where various blood chemistries are initiated, resulting in different colored reaction products, depending on the component being analyzed. The color within each cuvette 100 is then analyzed using the spectrophotometer in a manner described in copending application Serial No. 08/040,549, previously incorporated herein by reference. The results may then be displayed on the monitor 44 and/or transferred to memory storage 40 and/or printed out in appropriate format.

Although the foregoing invention has been described in some detail by way of illustration and example, for purposes of clarity of understanding, it will be obvious that certain changes and modifications may be practiced within the scope of the appended claims.

WHAT IS CLAIMED IS:

1. An analyzer module for use with a general purpose computer having an expansion receptacle, a power interface, and a signal interface, said analyzer module comprising:

a frame having external dimensions which permit it to be received within the expansion receptacle;

means on the frame for receiving a specimen when the frame is present in the expansion module;

means on the frame for producing an output signal in response to a characteristic of the specimen;

means on the frame for connecting to the power interface; and

means on the frame for connecting to the signal interface.

2. An analyzer module as in claim 1, wherein the frame is a box having a front panel.

3. An analyzer module as in claim 2, wherein the means on the frame for receiving a specimen comprises an aperture in the front panel for passing the specimen into an interior of the frame.

4. An analyzer module as in claim 3, wherein the means for receiving a specimen further comprises a spindle for receiving an analytical rotor thereon.

5. An analyzer module as in claim 1, wherein the means for producing an analog signal comprises a light source and a light detector, wherein the light source is oriented to direct light onto or through the specimen and the detector is oriented to detect transmitted reflected or emitted light from the specimen, wherein the detector produces an analog output signal.

6. An analyzer module as in claim 1, wherein the output signal is analog and which further comprises means for converting the analog signal to a digital signal, wherein the digital signal may be connected to the signal interface.

7. An analyzer as in claim 1, wherein the power interface connecting means comprises a four-pin plug.

8. An analyzer as in claim 1, wherein the signal interface connecting means connects to an interface connector on the computer.

9. An analyzer as in claim 1, wherein the signal interface connecting means connects to a motherboard on the computer.

10. An analyzer module for use with a general purpose computer having an expansion receptacle, a power interface, and a signal interface, said analyzer module comprising:

a frame having external dimensions which permit to be received within the expansion receptacle;

a spindle on the frame for receiving and rotating an analytical rotor having a plurality of peripheral sample cuvettes;

a light source disposed on the frame to direct light through said cuvettes when said rotor is mounted on said spindle;

a photodetector disposed on the frame to detect light which has passed through said cuvettes and for producing an output signal;

means on the frame for connecting to the power interface; and

means on the frame for connecting to the signal interface.

11. An analyzer module as in claim 10, wherein the frame is a box having a front panel.

12. An analyzer module as in claim 11, wherein the front panel includes an aperture for passing the analytical rotor through to the spindle.

13. An analyzer module as in claim 10, wherein the power interface connecting means comprises a four-pin plug.

14. An analyzer module as in claim 10, wherein the photodetector output signal is connected directly to the signal interface connecting means, wherein the general purpose computer converts the analog signal to a digital signal.

15. An analyzer module as in claim 10, further comprising means for converting the analog output signal to a digital signal, wherein the digital signal is connected to the general purpose computer through the signal interface.

16. An analyzer module as in claim 10, further comprising a microprocessor and memory, wherein the microprocessor and memory control all functions of the spindle, light source, and photodetector under the supervision of the general purpose computer through the signal interface means.

17. An analyzer module as in claim 16, wherein the microprocessor and memory further provide all data in digital form from the photodetector to the general purpose computer via the signal interface means.

18. A computer system having the capability of analyzing a physical specimen, said computer system comprising:

a general purpose computer having a digital processor, memory, an output means, an input means, a power interface, a signal interface, and an expansion receptacle;

a frame having external dimensions which permit it to be received within the expansion receptacle;

means on the frame for receiving a specimen when the frame is present in the expansion module;

means on the frame for producing an output signal in response to a characteristic of the specimen;

means on the frame for connecting to the power interface; and

means on the frame for connecting to the signal interface.

19. A computer system as in claim 18, wherein the frame is a rectangular box having a front panel, wherein the rectangular box is received substantially entirely within the expansion receptacle.

20. A computer system as in claim 19, wherein the means on the frame for receiving a specimen comprises an aperture in the front panel for passing the specimen into an interior of the frame.

21. A computer system as in claim 20, wherein the means for receiving a specimen further comprises a spindle for receiving an analytical rotor thereon.

22. A computer system as in claim 18, wherein the means for producing an analog signal comprises a light source and a light detector, wherein the light source is oriented to direct light onto or through the specimen and the detector is oriented to detect

transmitted reflected or emitted light from the specimen, wherein the detector produces an analog output signal.

23. A computer system as in claim 18, wherein the output signal is analog and which further comprises means for converting the analog signal to a digital signal, wherein the digital signal may be connected to the signal interface.

24. A computer system as in claim 18, wherein the power interface connecting means comprises a four-pin plug.

25. A computer system as in claim 18, wherein the signal interface connecting means connects to an SCSI on the computer.

26. A computer system as in claim 18, wherein the signal interface connecting means connects to a motherboard on the computer.

27. A method for modifying a general purpose computer having an expansion receptacle of the type intended to receive a compatible device, said method comprising:

inserting an analyzer module having a means for analyzing a specimen which produces an output signal in response to a characteristic of the specimen at least partially into said expansion receptacle; and

connecting the means for analyzing a specimen within the analyzer module to a power interface and a signal interference in the computer.

28. A method for modifying as in claim 27, wherein the analog signal is connected via the signal interface to a means within the computer for converting the analog signal to a digital signal.

29. A method for modifying as in claim 27, wherein the analog signal is connected to means within the module for converting the analog signal to a digital signal, and wherein digital signal is connected to the signal interface in the computer.

30. A method for modifying as in claim 29, wherein the digital signal is connected to an interface connector on the general purpose computer.

31. A method for modifying as in claim 29, wherein the digital signal is connected to a motherboard on the computer.

32. A method as in claim 27, wherein the expansion receptacle is internal to the general purpose computer.

33. A method for analyzing a specimen, said method comprising:

introducing the specimen into an analyzer module which is received at least within an expansion receptacle within a general purpose computer;

producing an output signal within the module which is characteristic of a property of the specimen; and

processing the output signal using a processor of the computer.

34. A method as in claim 33, wherein the specimen is a liquid specimen.

35. A method as in claim 33, wherein the biological specimen is a biological specimen.

36. A method as in claim 35, wherein the specimen is blood and which further comprises

centrifuging the blood in an analytical rotor which has been introduced into the analytical module.

37. A method as in claim 33; wherein the output signal is produced spectrophotometrically.

38. A method as in claim 33, wherein the output signal is an analog signal which is converted to a digital signal within the analyzer module.

39. A method as in claim 33, wherein the output signal is an analog signal which is converted to a digital signal within the computer.

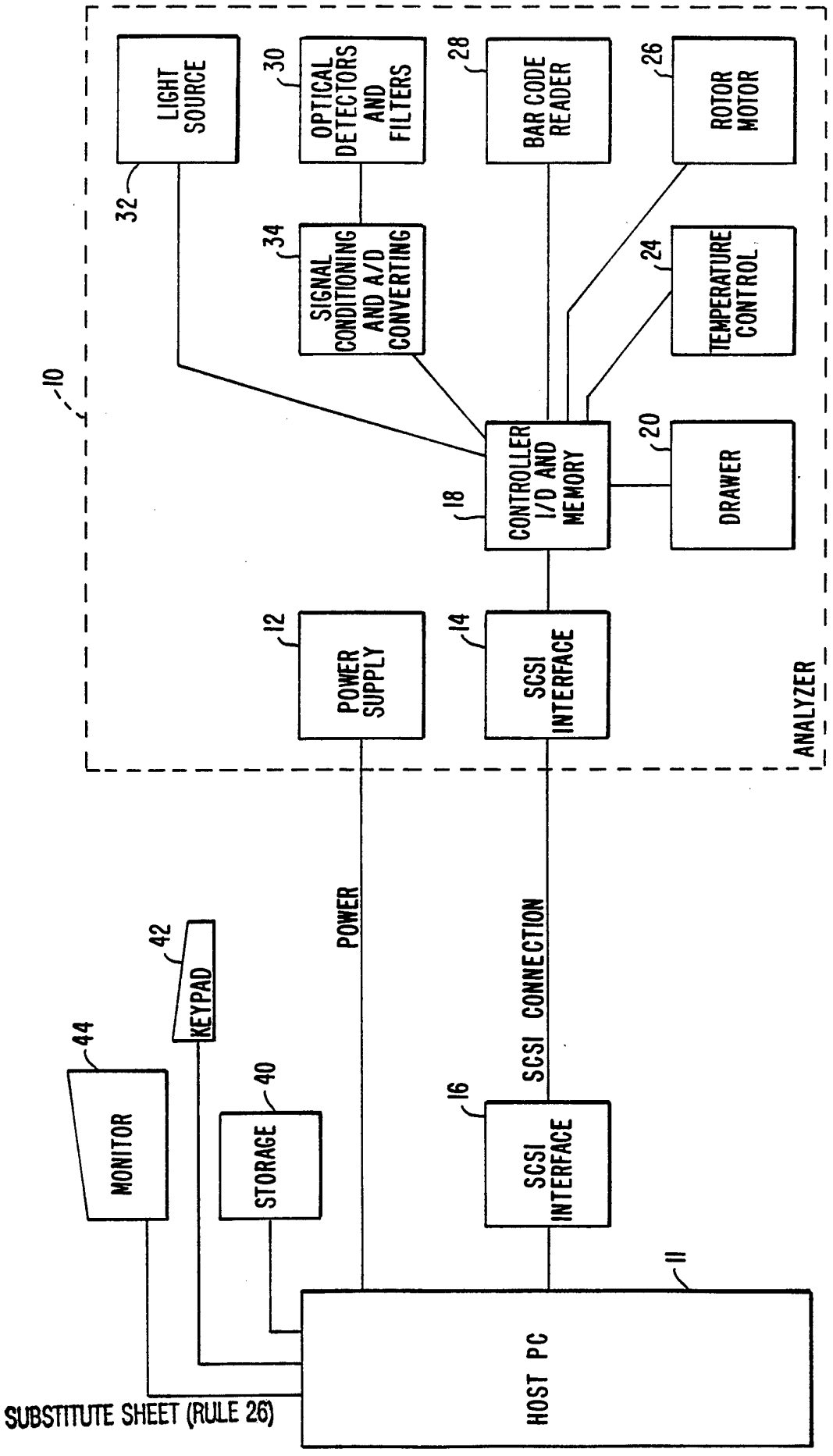
LIGHT SOURCE
32
OPTICAL DETECTORS AND FILTERS
30
BAR CODE READER
28
ROTOR MOTOR
26
SIGNAL CONDITIONING AND A/D CONVERTING
34
TEMPERATURE CONTROL
24
10
CONTROLLER I/O AND MEMORY
18
DRAWER
20
POWER SUPPLY
12
SCSI INTERFACE
14
ANALYZER
POWER
SCSI CONNECTION
42
KEYPAD
44
MONITOR
40
STORAGE
16
SCSI INTERFACE
11
HOST PC

FIG. 1.

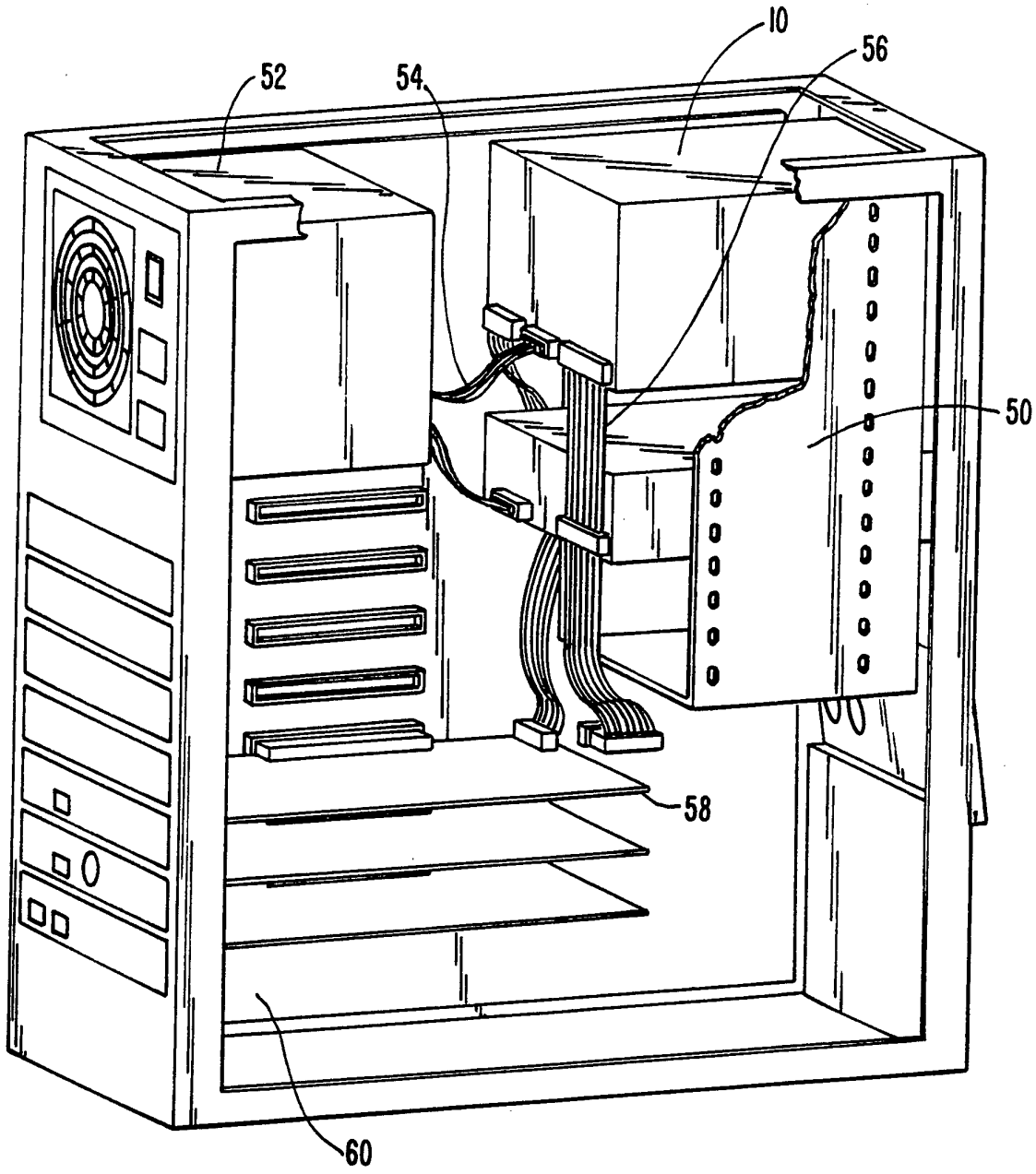

FIG. 2.

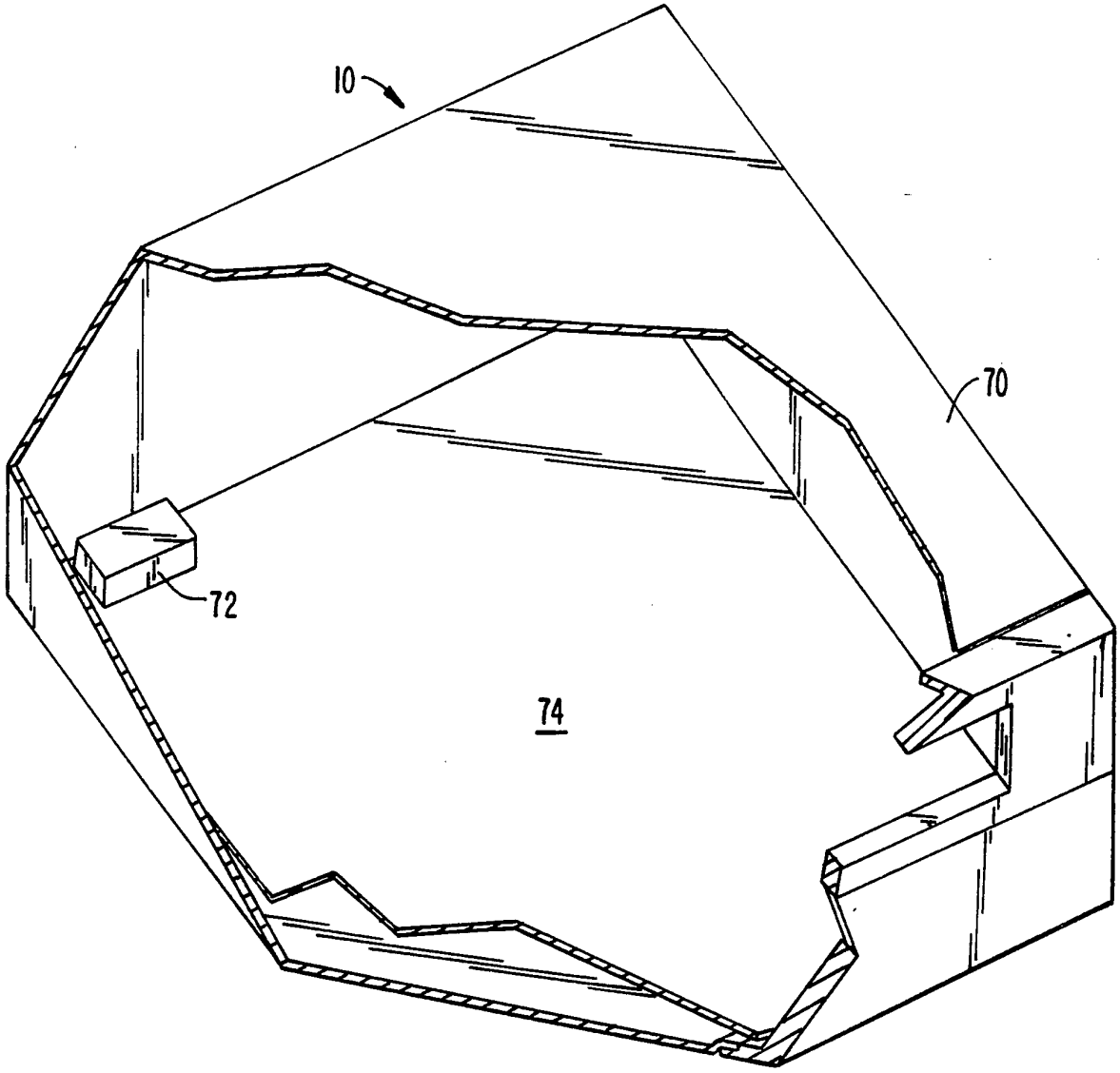

FIG. 3.

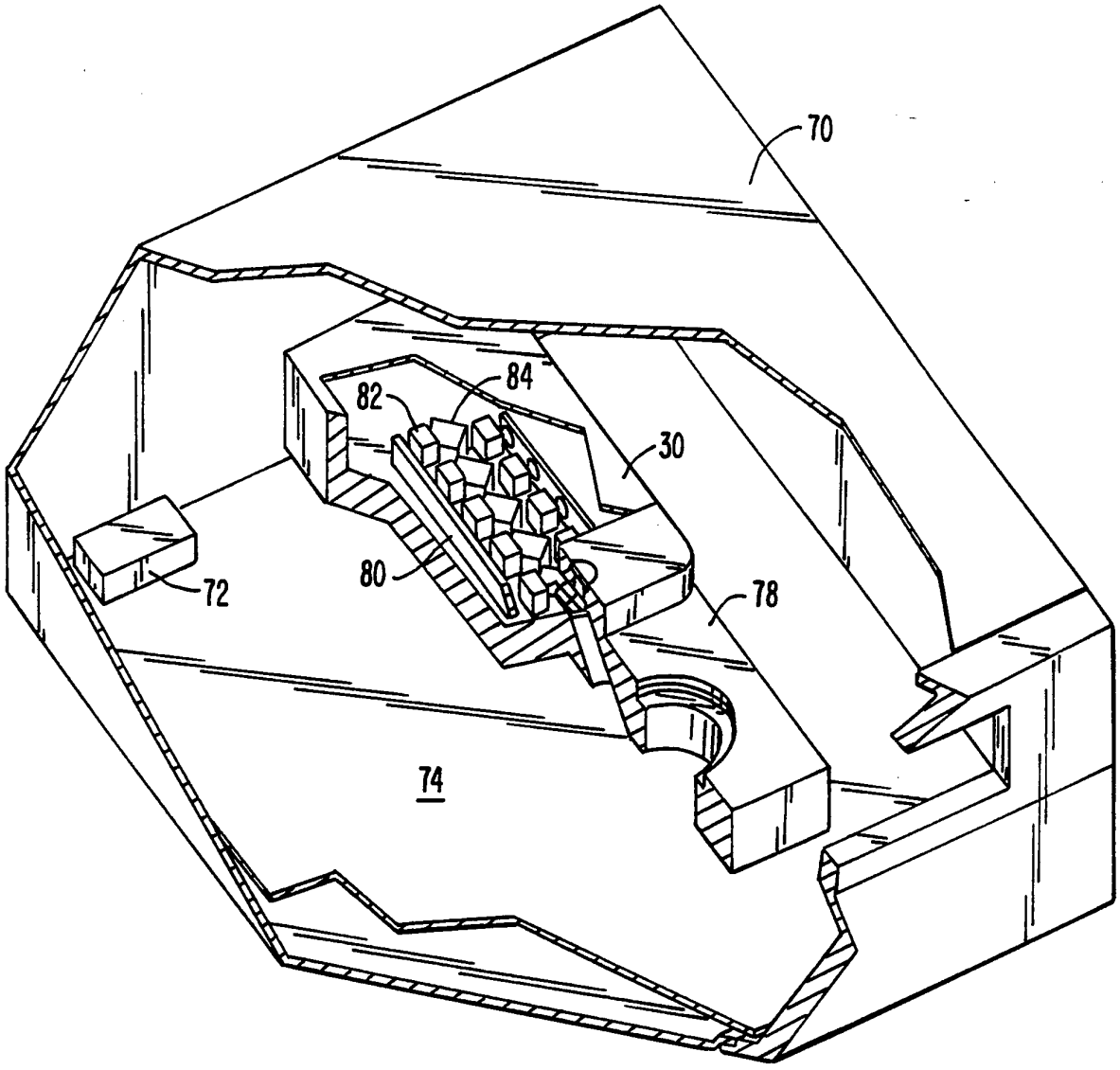

FIG. 4.

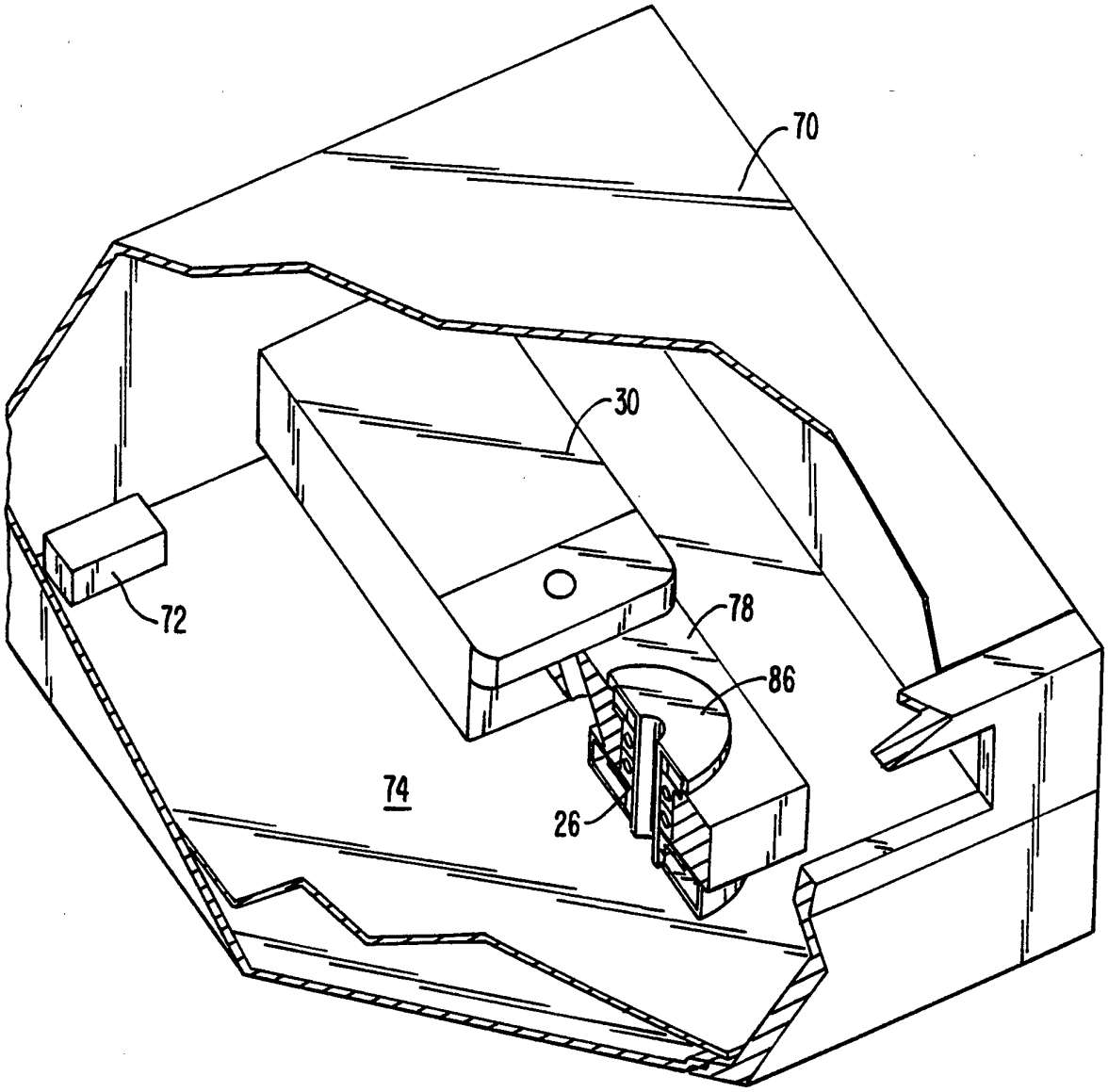

FIG. 5.

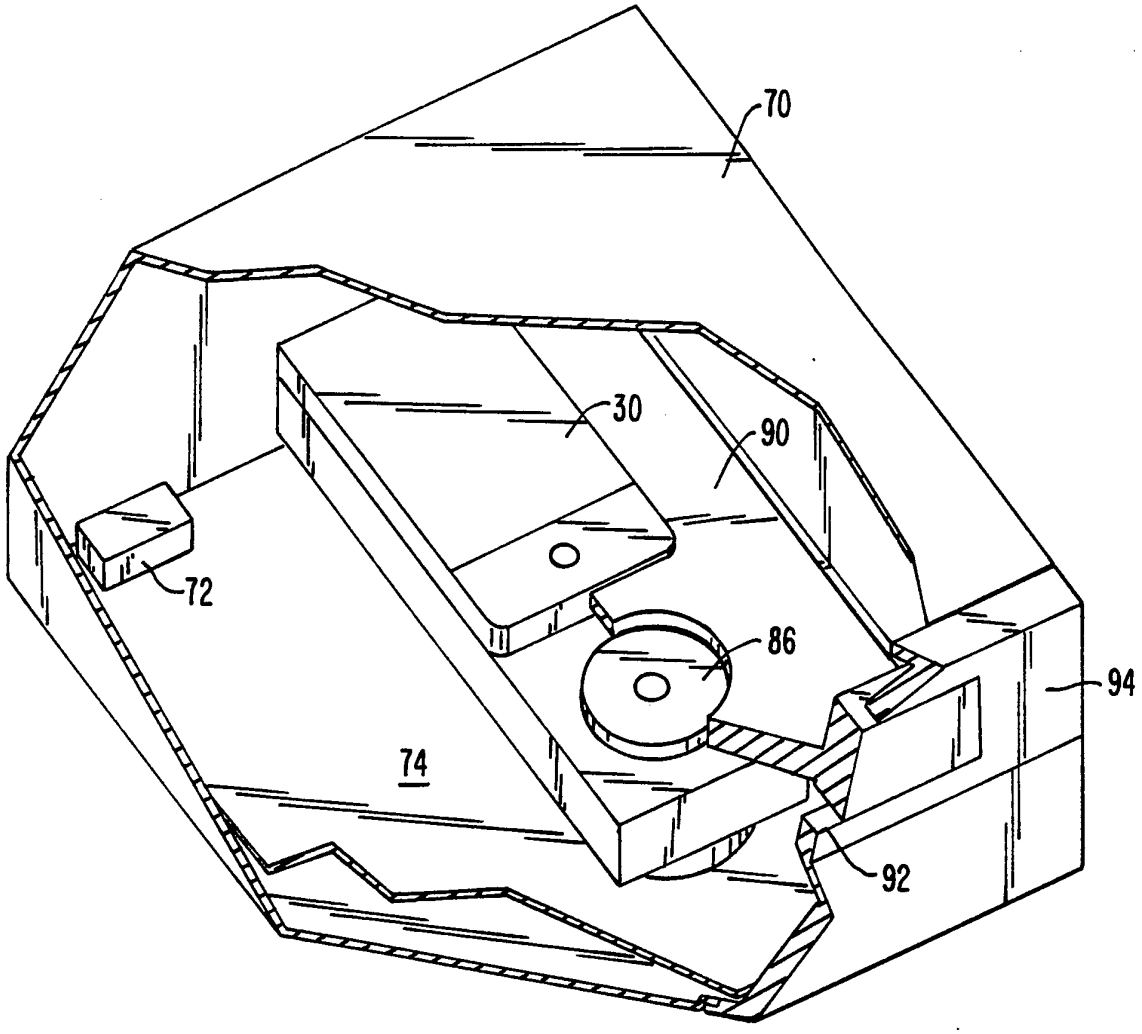

FIG. 6.

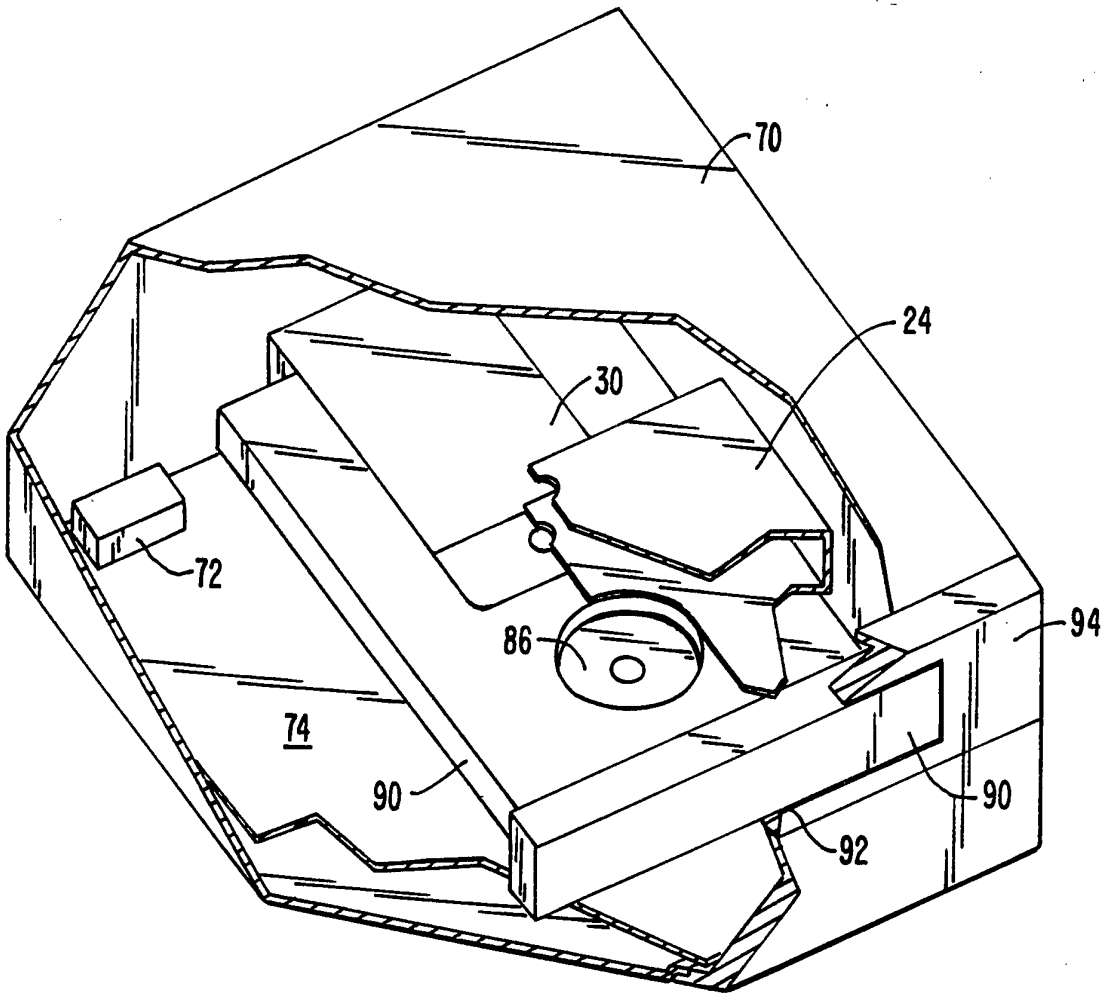

FIG. 7.

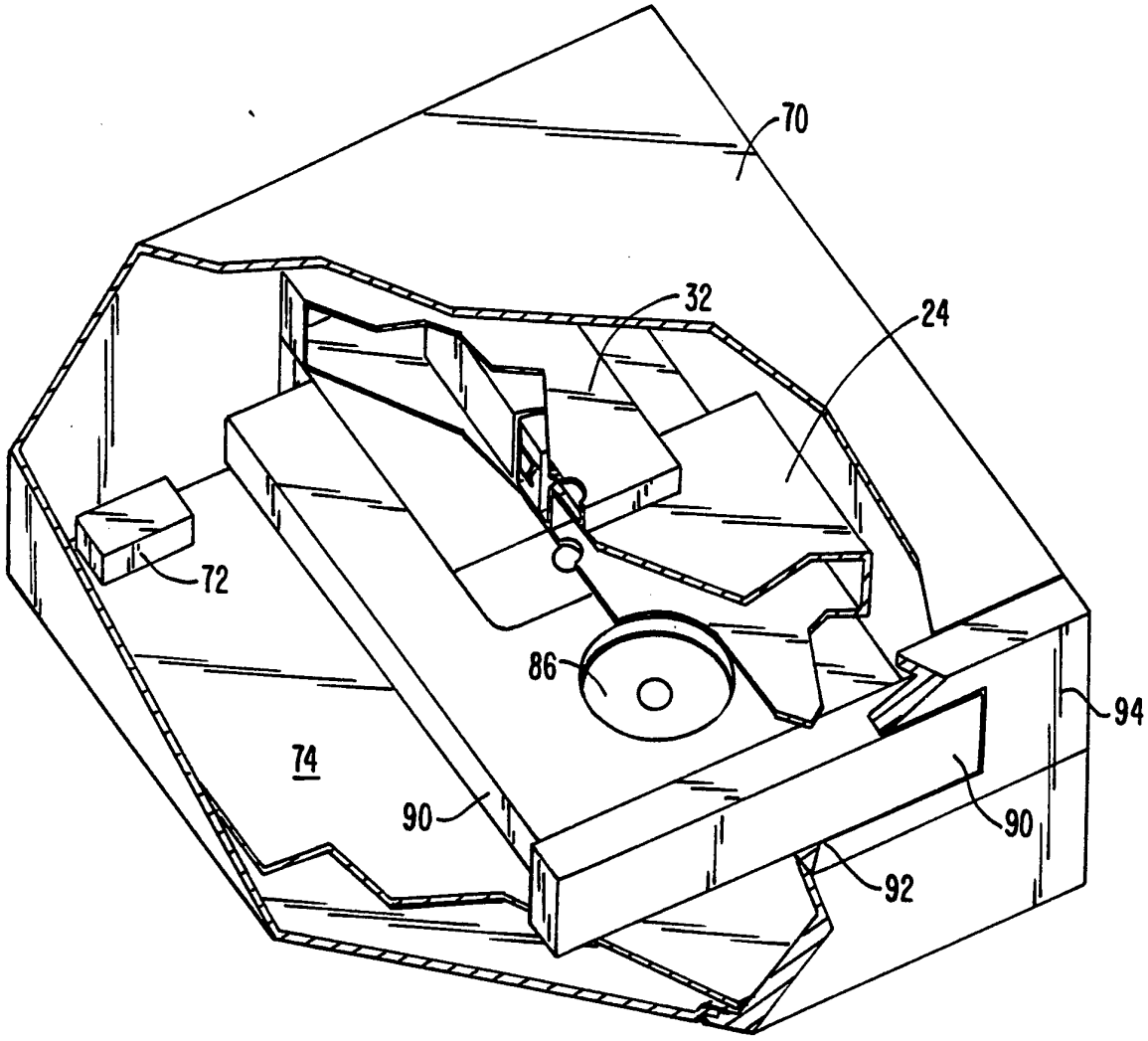

FIG. 8.

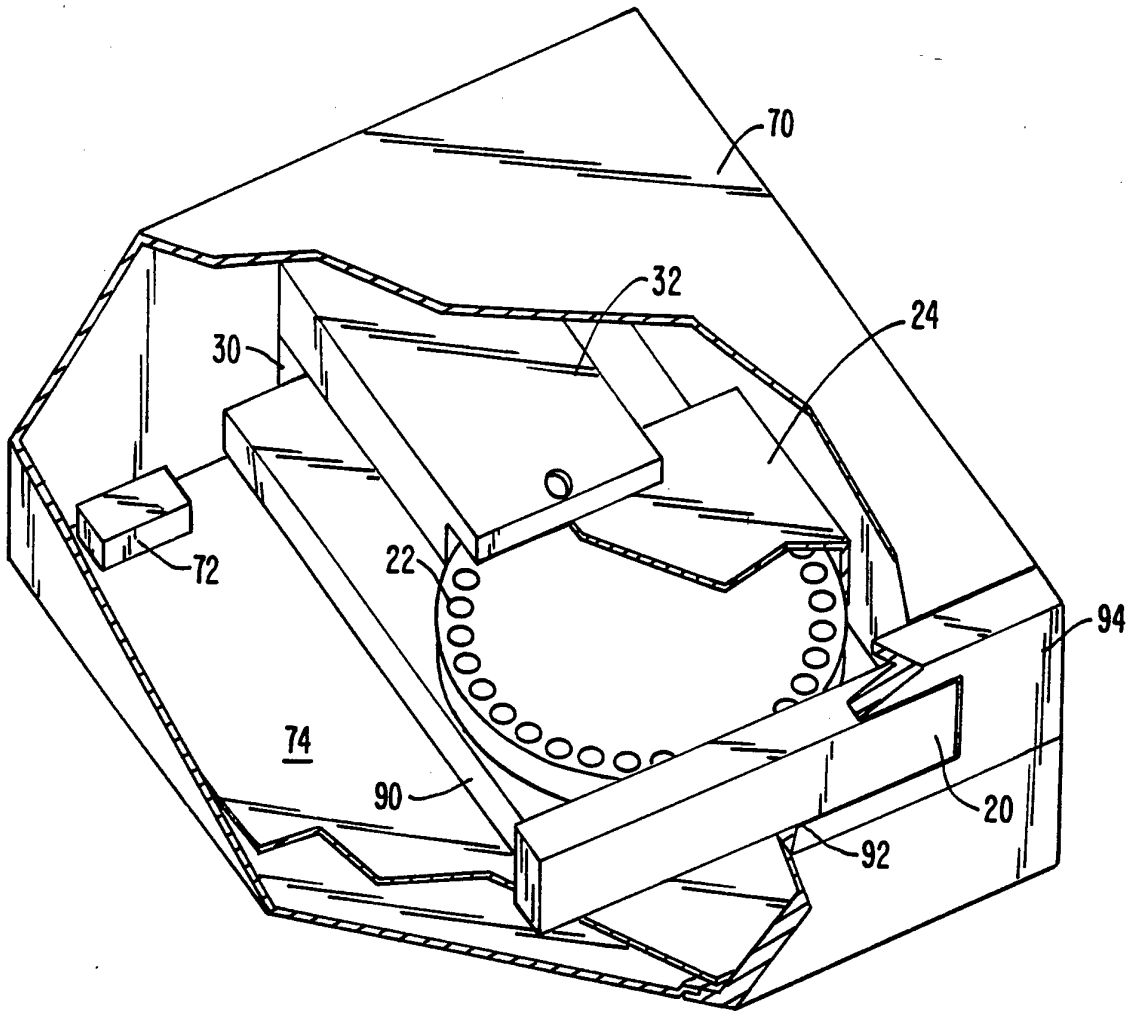

FIG. 9.

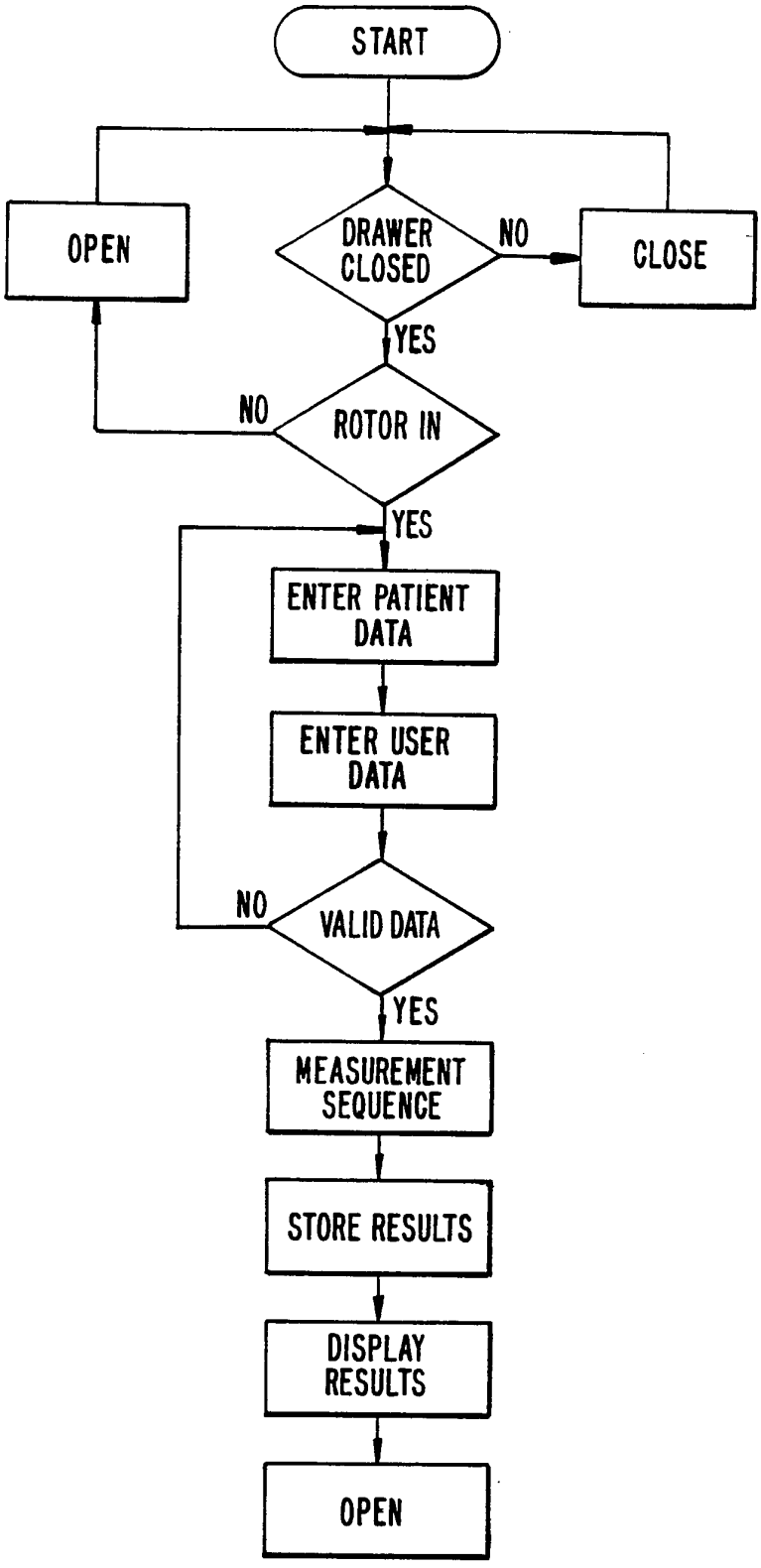
START
OPEN
DRAWER CLOSED
NO
CLOSE
YES
NO
ROTOR IN
YES
ENTER PATIENT DATA
ENTER USER DATA
NO
VALID DATA
YES
MEASUREMENT SEQUENCE
STORE RESULTS
DISPLAY RESULTS
OPEN

FIG. 10.

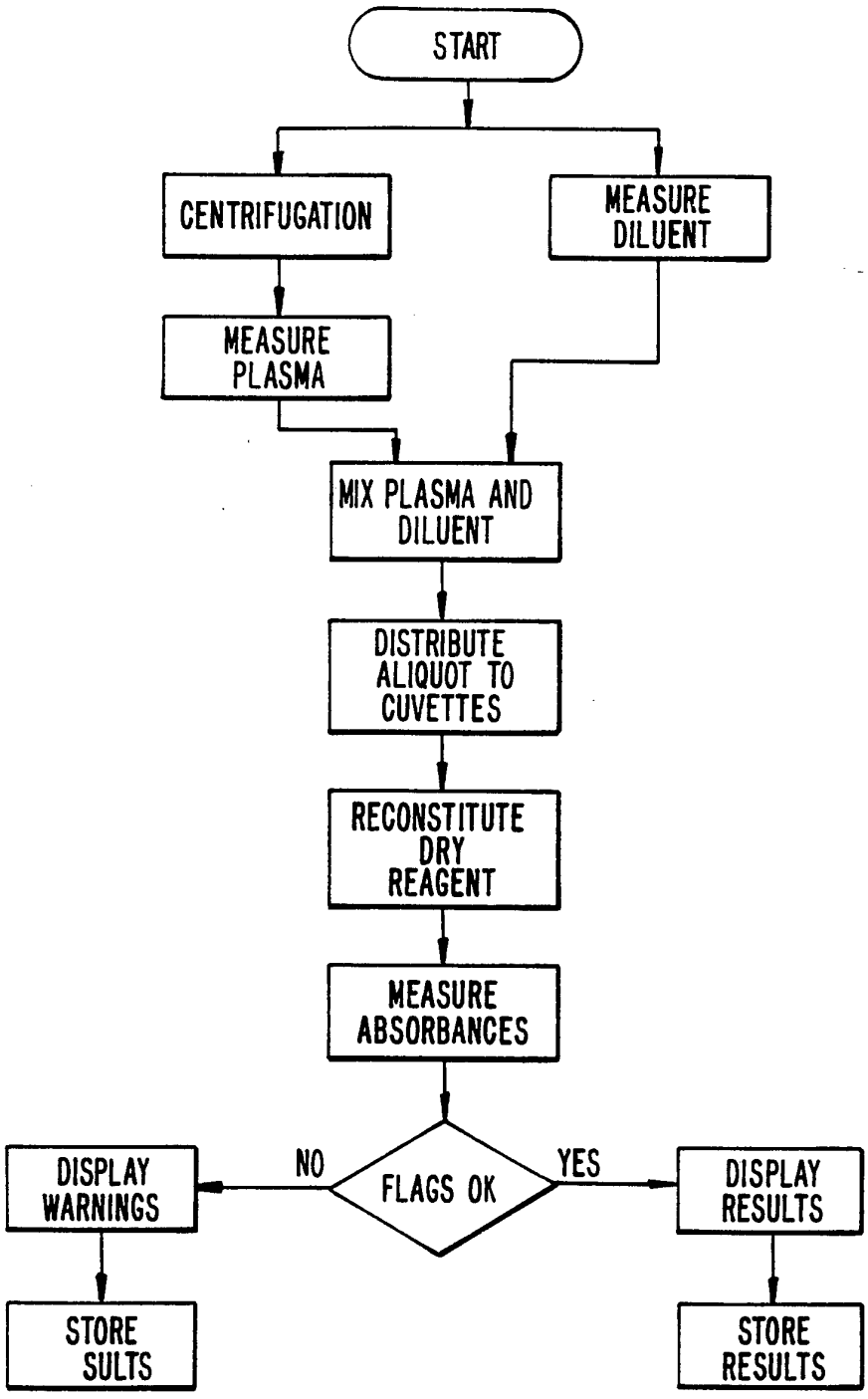
START
CENTRIFUGATION
MEASURE DILUENT
MEASURE PLASMA
MIX PLASMA AND DILUENT
DISTRIBUTE ALIQUOT TO CUVETTES
RECONSTITUTE DRY REAGENT
MEASURE ABSORBANCES
FLAGS OK
NO
YES
DISPLAY WARNINGS
DISPLAY RESULTS
STORE SULTS
STORE RESULTS

FIG. 11.

INTERNATIONAL SEARCH REPORT

International application No.
PCT/US94/06459

A. CLASSIFICATION OF SUBJECT MATTER

IPC(5) :G01N 35/00; G06F 15/00
US CL : 422/64, 65; 364/496, 497; 73/863.32, 864.81
According to International Patent Classification (IPC) or to both national classification and IPC

B. FIELDS SEARCHED

Minimum documentation searched (classification system followed by classification symbols)

U.S. : 422/64, 65; 436/47; 364/496, 497, 498, 550; 73/863.21, 863.32, 863.33, 864.01, 864.51, 864.81, 864.82

Documentation searched other than minimum documentation to the extent that such documents are included in the fields searched

Electronic data base consulted during the international search (name of data base and, where practicable, search terms used)

APS

C. DOCUMENTS CONSIDERED TO BE RELEVANT

Category*	Citation of document, with indication, where appropriate, of the relevant passages	Relevant to claim No.
Y	Philips LMS "CM 205MS and CM 225MS CD-ROM User Manual", June 1993, pages 3-24.	1-26
Y	US, A, 4,660,151 (Chipman et al.) 21 April 1987, col. 4 line 24 to col. 5 line 64, the abstract, Figs. 1 and 2.	1-3, 5-9, 18-20, 22-26
Y	US, A, 4,935,875 (Shah et al.) 19 June 1990, col. 2 line 48 to col. 5 line 37, col. 6 line 38 to col. 7 line 50, the abstract, Figs. 1-4.	1-3, 5-9, 18-20, 22-26
Y,P	US, A, 5,270,210 (Weyrauch et al.) 14 December 1993, col. 3 line 8 to col. 5 line 41, the abstract, Figs. 1 and 2.	1-26

[X] Further documents are listed in the continuation of Box C. [ ] See patent family annex.

*	Special categories of cited documents:	"T"	later document published after the international filing date or priority date and not in conflict with the application but cited to understand the principle or theory underlying the invention
"A"	document defining the general state of the art which is not considered to be part of particular relevance	"X"	document of particular relevance; the claimed invention cannot be considered novel or cannot be considered to involve an inventive step when the document is taken alone
"E"	earlier document published on or after the international filing date	"Y"	document of particular relevance; the claimed invention cannot be considered to involve an inventive step when the document is combined with one or more other such documents, such combination being obvious to a person skilled in the art
"L"	document which may throw doubts on priority claim(s) or which is cited to establish the publication date of another citation or other special reason (as specified)	"&"	document member of the same patent family
"O"	document referring to an oral disclosure, use, exhibition or other means		
"P"	document published prior to the international filing date but later than the priority date claimed		

Date of the actual completion of the international search 17 AUGUST 1994	Date of mailing of the international search report 07 NOV 1994
Name and mailing address of the ISA/US Commissioner of Patents and Trademarks Box PCT Washington, D.C. 20231 Facsimile No. (703) 305-3230	Authorized officer Todd Voeltz Telephone No. (703) 305-9714

Form PCT/ISA/210 (second sheet)(July 1992)*

INTERNATIONAL SEARCH REPORT

International application No.
PCT/US94/06459

C (Continuation). DOCUMENTS CONSIDERED TO BE RELEVANT

Category*	Citation of document, with indication, where appropriate, of the relevant passages	Relevant to claim No.
Y	US, A, 4,959,796 (Hidaka et al.) 25 September 1990, col. 5 line 9 to col. 8 line 20, Figs. 6-9.	1-26
A	US, A, 4,958,295 (Davidson et al.) 18 September 1990, the entire document especially Fig. 1 and the accompanying description.	1-26
A	US, A, 4,980,844 (Demjanenko et al.) 25 December 1990, the entire document especially Figs. 1A and 1B and the accompanying description.	1-26
A	US, A, 5,168,766 (Stoffel) 8 December 1992, the entire document especially Fig. 1 and the accompanying description.	1-26

INTERNATIONAL SEARCH REPORT

International application No.
PCT/US94/06459

Box I Observations where certain claims were found unsearchable (Continuation of item 1 of first sheet)

This international report has not been established in respect of certain claims under Article 17(2)(a) for the following reasons:

1. ☐ Claims Nos.:
because they relate to subject matter not required to be searched by this Authority, namely:

2. ☐ Claims Nos.:
because they relate to parts of the international application that do not comply with the prescribed requirements to such an extent that no meaningful international search can be carried out, specifically:

3. ☐ Claims Nos.:
because they are dependent claims and are not drafted in accordance with the second and third sentences of Rule 6.4(a).

Box II Observations where unity of invention is lacking (Continuation of item 2 of first sheet)

This International Searching Authority found multiple inventions in this international application, as follows:

Group I Claims 1-26, drawn to a specimen analyzer module, classified in class 422, subclass 64.

Group II Claims 27-32, drawn to a method for modifying a general computer, classified in class 364, subclass 496.

Group III Claims 33-39, drawn to a method for analyzing a sample, classified in class 436, subclass 45.

1. ☐ As all required additional search fees were timely paid by the applicant, this international search report covers all searchable claims.

2. ☐ As all searchable claims could be searched without effort justifying an additional fee, this Authority did not invite payment of any additional fee.

3. ☐ As only some of the required additional search fees were timely paid by the applicant, this international search report covers only those claims for which fees were paid, specifically claims Nos.:

4. ☒ No required additional search fees were timely paid by the applicant. Consequently, this international search report is restricted to the invention first mentioned in the claims; it is covered by claims Nos.:
1-26

Remark on Protest

☐ The additional search fees were accompanied by the applicant's protest.

☐ No protest accompanied the payment of additional search fees.