Dec. 4, 1956 P. OCULATO 2,772,938

ADJUSTABLE KITCHEN CABINET CONSTRUCTION

Filed April 11, 1955

FIG. 1.

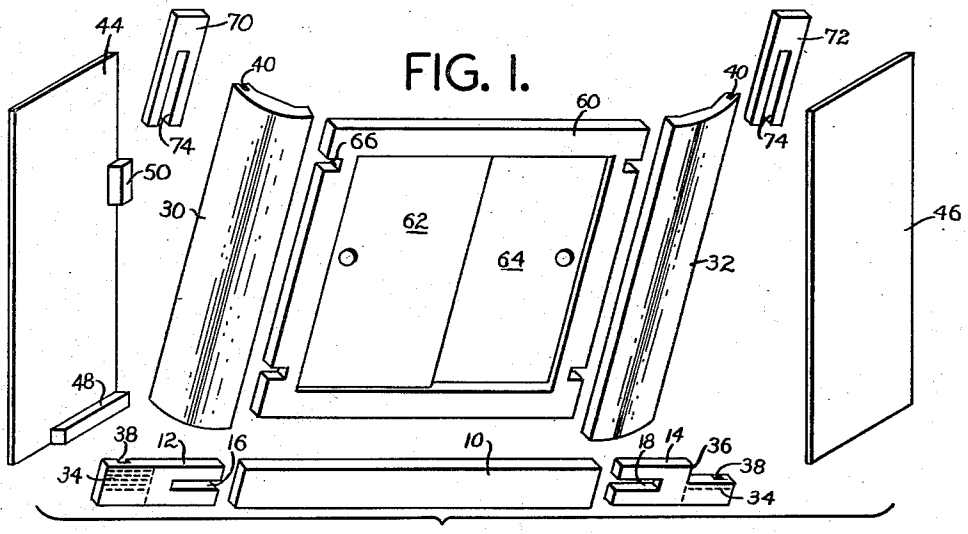

FIG. 2.

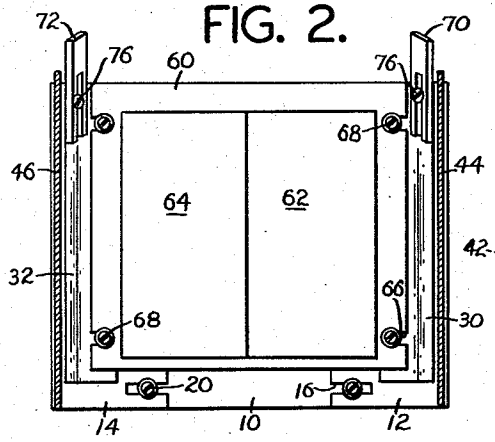

FIG. 3.

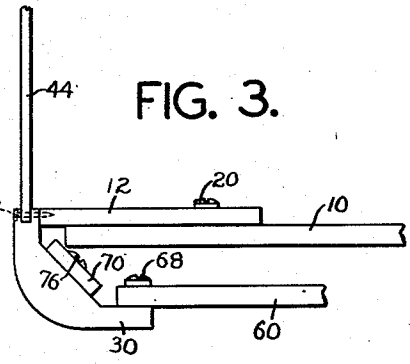

FIG. 4.

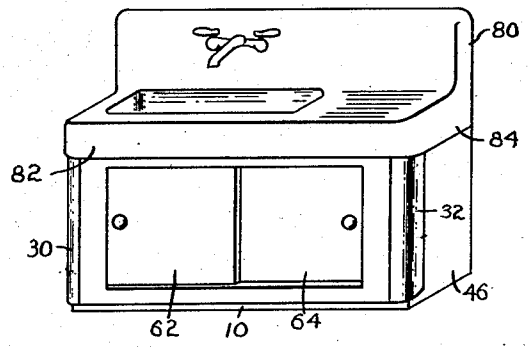

INVENTOR
PATSY OCULATO.
BY Samuel J. Stree
ATTORNEY

United States Patent Office

2,772,938

Patented Dec. 4, 1956

2,772,938

ADJUSTABLE KITCHEN CABINET CONSTRUCTION

Patsy Oculato, Valley Stream, N. Y.

Application April 11, 1955, Serial No. 500,495

3 Claims. (Cl. 312—210)

This invention relates to an adjustable kitchen cabinet construction.

The invention pertains mainly to kitchen sinks but it is equally applicable to other kitchen appliances or facilities which are enclosed in cabinets or like enclosures. For purposes of illustration, however, the invention will be described solely in terms of its application to a kitchen sink but it will be understood that this is not intended to limit the scope of the invention.

Many sinks, especially older sinks, are provided with exposed plumbing. This is an unsightly condition which the present invention remedies. It should be understood, however, that the invention is not limited to its application to old sinks since it is equally applicable to new ones.

The cabinet herein claimed constitutes an adjustable enclosure which is adapted to fit under a sink and to conceal its plumbing. Moreover, said enclosure performs the function of a conventional cabinet, namely, to provide an enclosed space in which various articles may be stored or kept without being exposed to view.

An important feature of this invention is the adjustable and adaptable character of the enclosure or cabinet herein claimed. It will be understood that since sinks are made in various sizes and shapes and are installed at various heights above the floor, an enclosure for such sinks would necessarily have to be adjustable in various directions. For example, it must be adjustable in width or depth and it must also be adjustable in length. It is also necessary that it be adjustable in height. The cabinet or enclosure herein claimed is adjustable in all these respects.

Another important feature of this invention is the adjustable support which the cabinet enclosure herein claimed provides for the sink. Sinks are commonly installed against a wall. Suitable brackets are provided on the wall to support the back of the sink. The front of the sink also requires support and this is sometimes provided in the form of a pair of posts which support the two front corners of the sink.

The present cabinet or enclosure provides an adjustable support for the two front corners of the sink. It includes a pair of vertically adjustable corner members which engage the sink in its two front corners immediately behind the apron or front wall of the sink. These adjustable members are adjustable not only to sinks of different proportions or dimensions but also to sinks which are installed at varying heights above the floor.

It is accordingly the principal object of this invention to provide cabinet or enclosure means capable of converting an open type of sink to an enclosed or cabinet-type of sink, said cabinet or enclosure means being adjustable in three directions to accommodate sinks of various sizes and shapes and installed at various heights above the floor.

The invention is illustrated in the accompanying drawing in which:

Fig. 1 is an exploded perspective view of the several components of a sink enclosure or cabinet or the like made in accordance with the present invention.

Fig. 2 is a vertical section therethrough showing the parts in assembled condition.

Fig. 3 is a fragmentary, enlarged top view of one of the corners of said enclosure.

Fig. 4 is a perspective view showing a sink enclosure or cabinet made in accordance with this invention and installed under a conventional sink.

Referring now to Fig. 1 of the drawing it will be observed that the enclosure or cabinet herein claimed includes a baseboard **10** and a pair of extension pieces **12** and **14** respectively. These extension pieces are provided with longitudinally extending slots **16** and **18** respectively and it is through said slots that screws **20** may be inserted in order to secure said extension pieces to the base board **10**. See Figs. 2 and 3. It will be observed that the slots are relatively long and consequently it is possible to shift these extension pieces longitudinally with respect to the baseboard and with respect to each other. A longer sink would require that these extension pieces be shifted outwardly and shorter sink would require that they be shifted inwardly. In either case, they are disposed behind the baseboard and are not exposed to view from the outside of the cabinet.

The enclosure or cabinet herein claimed also includes a pair of corner members **30** and **32** respectively which may be arcuately shaped as shown in the drawing or provided with any other suitable shape, as desired. These corner members rest upon extension pieces **12** and **14** but, depending upon the construction of the sink and its height above the floor, said corner members **30** and **32** must occupy different positions above the floor. This may be accomplished by providing the extension pieces **12** and **14** with horizontal guide lines **34** which may be calibrated in inches or fractions of inches or in any other preferred manner. Once it is decided at which height the corner members **30** and **32** are to be installed, these extension pieces **12** and **14** may be cut along these guide lines **34** to provide a suitable cutout **36** as illustrated in connection with extension piece **14** in Fig. 1.

It will be noted that vertical grooves **38** are formed in extension pieces **12** and **14**. Corresponding grooves **40** are formed along the back edges of corner members **30** and **32**. Grooves **40** and **38** are adapted to register with each other when the corner pieces **30** and **32** are placed upon said extension pieces as shown in the drawing. Nails **42** secure the lower ends of corner pieces **30** and **32** to said extension pieces to insure registration of said grooves and also to help hold the parts together. Side boards **44** and **46** are installed with their forward edges disposed within said grooves **40** and **38** and nails or other suitable fastening means are employed to secure said side boards to said corner members **30** and **32** and said extension pieces **12** and **14**. Cleats **48** are provided along the bottom edges of said side boards **44** and **46** in order to adequately support them on the floor and nails may be driven through said cleats to secure the structure to the floor. Additional cleats **50** may be provided along the back edges of said side boards in order to secure them, if desired, to the wall of the room against which the sink is disposed.

The main or front panel or frame **60** of the enclosure or cabinet herein claimed is provided with a central opening and a pair of doors **62** and **64** respectively. These doors may be hingedly mounted on the front panel **60** so as to swing outwardly in order to open the cabinet or they may be slidably installed therein in overlapping relation for slidable movement either leftwardly or rightwardly as the case may be. It will be observed that four

notches 66 are provided in front panel or frame 60, these notches being formed in the sides of said panel or frame, one at each corner thereof. Screws 68 may be inserted through said notches to attach the front panel or frame 60 to the corner members 30 and 32 as is clearly shown in Figs. 2 and 3. These notches 66 are relatively deep to permit of lateral adjustment of said front panel or frame relative to said corner members or said corner members relative to said front panel or frame.

A pair of vertically extensible support members 70 and 72 are also provided and these support members are provided with longitudinally extending slots 74 to receive screws 76. These support members are secured to the corner members 30 and 32 by means of said screws 76, as shown in Figs. 2 and 3. Since these slots 74 are relatively long, it is possible to shift the positions of said vertical support members relative to said corner members 30 and 32. These support members are adapted to fit under sink 80 or any other open type sink, immediately behind the front apron or flange 82 and in the corners where said front apron or flange meets the side aprons or flanges 84. These corner supports are not open to view when the entire enclosure or cabinet herein claimed is installed, as shown in Fig. 4.

The foregoing is illustrative of a preferred form of this invention and it will be understood that this preferred form may be modified and other forms may be provided within the broad spirit of the invention and the broad scope of the claims.

I claim:

1. An adjustable enclosure or cabinet of the character described, comprising a baseboard, a pair of extension pieces adjustably secured to the ends of said baseboard, a pair of corner panels mounted on said extension pieces, a pair of side boards secured to said corner panels and extension pieces, a front frame adjustably secured to said

corner panels, and a pair of vertically adjustable supports secured to said corner panels at the upper ends of said corner panels to support a sink or the like on said cabinet enclosure, said extension pieces being longitudinally slotted and secured to said baseboard by means of screws extending through said slots and engaging said baseboard, said front frame being provided with a plurality of slots in its side edges, said slots extending horizontally, and screws extending through said horizontal slots and engaging the corner panels to secure said front frame to said corner panels, said supports being provided with longitudinally and vertically extending slots and screws extending through said slots and engaging the corner panels to secure said supports to said corner panels.

2. An adjustable enclosure or cabinet in accordance with claim 1, wherein the corner panels are provided with vertically extending grooves along their back edges and said extension pieces are provided with vertically extending grooves which register with the grooves in the corner panels, the front edges of the side of the side boards being disposed within said registering grooves in both the corner panels and the extension pieces.

3. An adjustable enclosure or cabinet in accordance with claim 1, wherein the front frame consists of an upper horizontal member and a lower horizontal member and a pair of vertically extending side members secured at their ends to the ends of said upper and lower members, a pair of doors being provided within said front frame to serve as closure members for the cabinet enclosure.

References Cited in the file of this patent

UNITED STATES PATENTS

2,050,617	Litner	Aug. 11, 1936
2,202,107	Korn	May 28, 1940
2,664,258	Lanier	Dec. 29, 1953