A. H. TAYLOR.

SIMULTANEOUS TRANSMISSION OR RECEPTION OF SPEECH AND SIGNALS.

APPLICATION FILED APR. 10, 1919.

1,376,051. Patented Apr. 26, 1921.

2 SHEETS—SHEET 1.

Fig. 1.

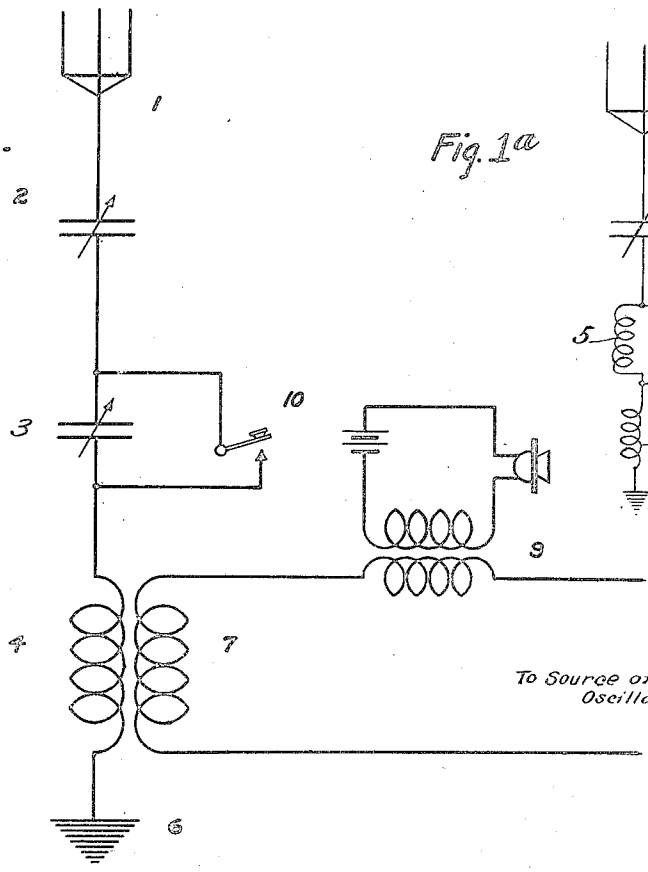

Fig. 1a

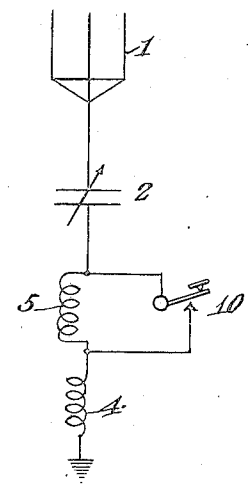

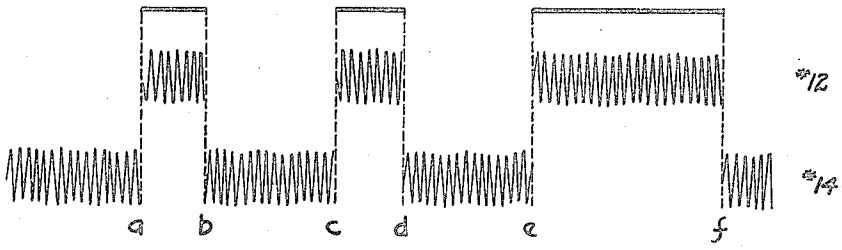

Fig. 2.

WITNESSES

J. B. Brady

E. C. Hanson

INVENTOR

A. Hoyt Taylor

BY E. H. Chaplin

ATTORNEY.

A. H. TAYLOR.

SIMULTANEOUS TRANSMISSION OR RECEPTION OF SPEECH AND SIGNALS.

APPLICATION FILED APR. 10, 1919.

1,376,051.

Patented Apr. 26, 1921.

2 SHEETS—SHEET 2.

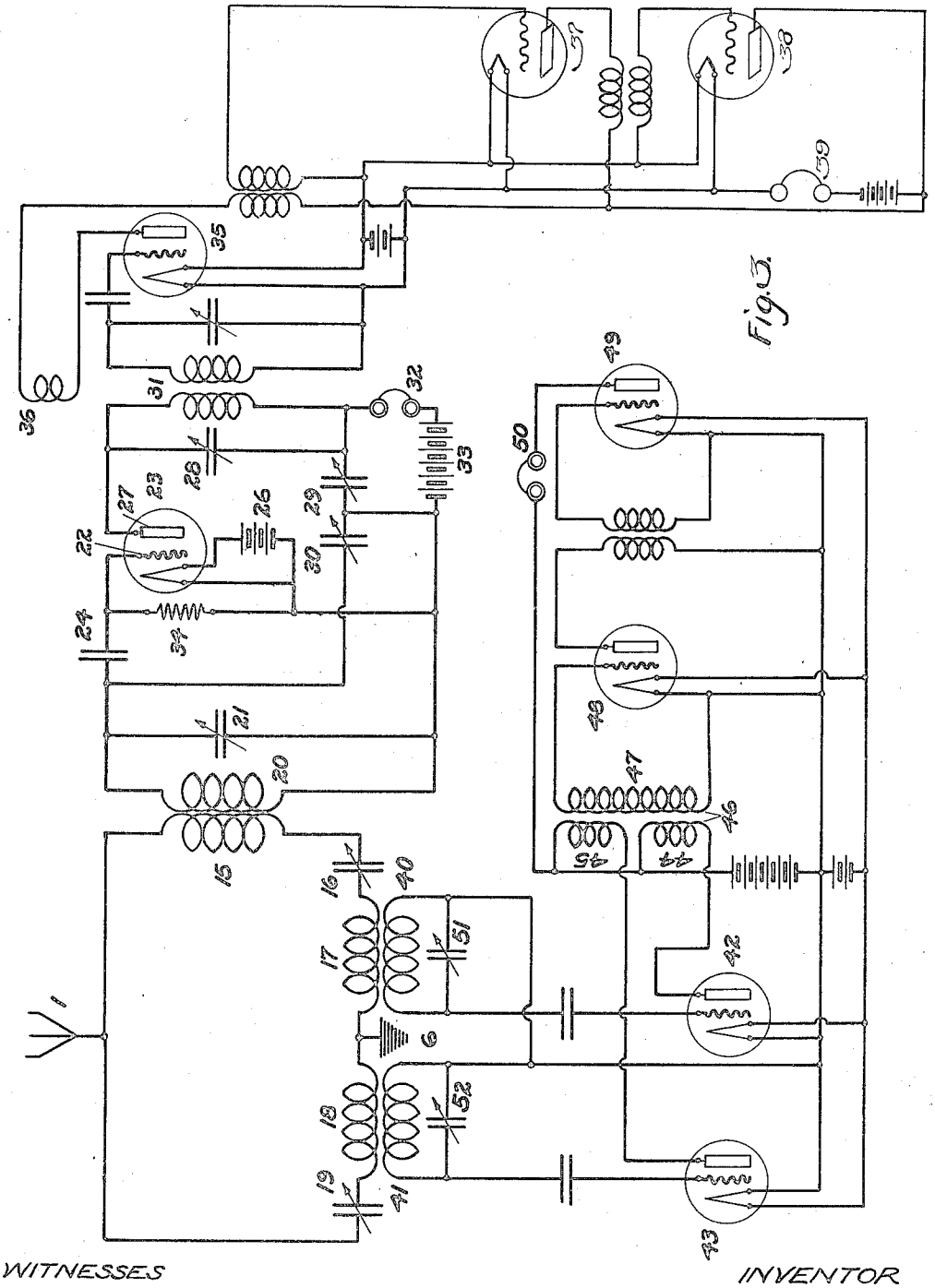

Fig. 3.

WITNESSES

J. B. Brady

H. C. Hanson

INVENTOR

A. Hoyt Taylor

BY E. H. Gaston

ATTORNEY

UNITED STATES PATENT OFFICE.

ALBERT HOYT TAYLOR, OF GRAND FORKS, NORTH DAKOTA.

SIMULTANEOUS TRANSMISSION OR RECEPTION OF SPEECH AND SIGNALS.

1,376,051. Specification of Letters Patent. Patented Apr. 26, 1921.

Application filed April 10, 1919. Serial No. 289,149.

To all whom it may concern:

Be it known that I, ALBERT HOYT TAYLOR, a citizen of the United States, residing in Grand Forks, county of Grand Forks, and State of North Dakota, have invented an Improvement in Simultaneous Transmission or Reception of Speech and Signals, of which the following is a specification.

My invention relates broadly to radio communication and more specifically to a system of radio telegraphy and telephony in which a message can be telegraphed simultaneously with a radio telephone conversation.

The object of my invention is to provide a radio transmitting and receiving system embodying means for maintaining a telephone conversation intermittently on either of two different waves, and for telegraphing on one of the waves.

Another object of this invention is to establish a method of transmitting simultaneous telegraph signals and a telephone conversation in such manner that the telephone conversation cannot be received continuously in a logical sequence by apparatus now used in the art.

A further object of the invention is to provide a transmitter adapted to operate on a single antenna and radiate a telephone conversation on either a carrier wave or a signal carrier wave on intermittent blocks of speech and simultaneously to transmit telegraph signals on the signal carrier wave.

A still further object of the invention is to devise a receiving circuit to work in conjunction with the transmitter comprising a single antenna system with a plurality of cooperative oscillating circuits adapted to respond to the carrier and signal carrier wave and piece together or combine the blocks of telephone conversation and simultaneously receive the telegraph signals.

Referring to the drawings Figure 1 is an elementary diagram of the transmitter. Fig. 1ª shows a modified wiring diagram of the transmitter. Fig. 2 illustrates the fundamental action of the transmitter employing a carrier wave and a signal carrier wave used in radiating blocks of telephone speech simultaneously with telegraph signals. Fig. 3 shows a diagram of connections for the receiving apparatus.

In prior systems for the simultaneously transmission of radio telegraph signals it has been customary to employ two distinct oscillating circuits energized by separate transmitters. It has also been proposed to utilize a commutating circuit in a multiplex system for transmitting a plurality of radio telegraph signals having different frequencies. It has also been proposed that radio telephone or telegraph signals may be transmitted in a semi-secret way by employing a rotating contact breaker in the antenna circuit. It has been further suggested that telegraph and telephone signals may be transmitted simultaneously on a single wave length.

In my system for the simultaneous transmission of radio telegraph and telephone signals, described in the following specification, I have successfully communicated secretly by radio telephone, simultaneously with the transmission of telegraph signals between the Bureau of Standards, Washington, and the Naval Air Station, Anacostia, D. C. The telegraph signals could not be heard in the telephone receiving circuits and the telephone conversation did not interfere with telegraph reception. It was further impossible to receive intelligently the telephone conversation with standard receiving apparatus.

Referring now more particularly to Fig. 1 of the drawings, reference character 1 indicates an antenna, 2 and 3 series variable condensers, and 4 the antenna inductance connected to ground 6.

The inductance 4 may be energized by a source of sustained oscillations, indicated at 8, by means of the associated coupling coil 7, or any form of connection may be employed to suitably excite the antenna system. The sustained oscillations from source 8 are modulated in accordance with voice frequencies by a suitably arranged circuit at 9. The series variable condenser 3 in the antenna circuit is shunted by a signal control means 10 shown diagrammatically as a key.

The condenser may be substituted by a suitable inductance 5 as shown in Fig. 1ª.

Fig. 2 shows the fundamental action of the simultaneous radio telegraph and telephone system. The waves are represented for telegraphing the letter "U" on the signal carrier wave 12, while blocks of speech are telephoned intermittently on the carrier wave 14 and signal carrier wave 12.

When the key 10 of the transmitter of Fig. 1 is in the normal open position the

carrier wave 14 is radiated on a certain wave length, for example 500 meters. If the letter "U" is to be telegraphed while the carrier wave is continuously modulated by speech the key 10 is depressed for the periods *ab*, *cd*, and *ef*. Upon pressing the key at point *a* the radiated wave is shifted to another wave length, say, for example, 600 meters, and transmits "dot" *ab* as a telegraph signal. Upon releasing key 10 the wave is automatically shifted back to 500 meters as at point *b*.

This action is repeated for each key depression as shown and blocks of telephone speech radiated. By shunting the condenser 3 by signal control means 10 the wave length of the antenna system is increased and the result obtained as above described.

If, however, the inductance coil 5 in Fig. 1 is substituted for the variable condenser 3, and the key 10 depressed the signal carrier wave will be shifted to a lower wave length, and in this event the carrier wave will be, for example, 600 meters and the signal carrier wave 500 meters.

The circuit diagram of the receiving system employed is shown in Fig. 3. The antenna 1 is connected in a closed oscillatory circuit comprising primary inductances 15, 17 and 18, and variable condensers 16 and 19 with a ground connection 6 located between inductances 17 and 18. The telegraph receiving apparatus is inductively coupled to the primary 15 of the antenna circuit by means of secondary 20. The secondary winding 20 is shunted by variable condenser 21, and connected at one end with the grid 22 of an audion bulb 23 through stopping condenser 24. The audion is equipped with the usual filament heated by a battery 26. The plate 27 is connected through variable condensers 28, 29 and 30 with one end of the secondary inductance 20. Variable condenser 28 shunts the primary of the radio frequency transformer 31, one end of the primary being connected through test telephone receivers 32, and the high voltage battery 33 to the midpoint between variable condensers 29 and 30 and the opposite end of secondary inductance 20. 34 is the usual grid leak shunted between the grid 22 and the high voltage battery 33 and filament battery 26.

The test telephone receivers 32 are placed in the plate circuit of bulb 23 in order to determine the oscillating condition of the audion circuit.

Oscillating circuit 35 is inductively coupled with the circuit of audion 23 by means of transformer 31 and is constructed regenerative by means of the usual coupling coil 36. 37 and 38 represent amplifiers inductively coupled with the regenerative circuit and containing telephone receivers 39 adapted to respond to the telegraph signals.

The method employed for receiving the intermittent blocks of telephone conversation and combining the same to produce complete understandable conversation will now be considered. Secondaries 40 and 41 are inductively associated with primary windings 17 and 18 respectively. The secondary coils 40 and 41 shunted by variable condensers 51 and 52 are connected respectively to audion circuits 42 and 43 having their output terminals connected to the primary windings 44 and 45 of audio frequency transformer 46. The secondary winding 47 of the audio frequency transformer is connected to the input terminals of a multi-stage thermionic amplifier represented at 48 and 49. The output of this multi-stage amplifier is connected to telephone receivers 50 which respond only to the received telephone conversation.

In the operation of my receiving apparatus primaries 15 and 17 and condenser 16 are adjusted in resonance with the signal carrier wave and primary inductance 18 with condenser 19 are tuned to respond to the carrier wave. The telegraph receiver is adjusted by first setting audion 23 into oscillation, until the oscillating condition is detected by means of test telephone receivers 32 inserted in series with the plate circuit 27. The resulting impulses in audion 23 will be of the order of 10,000 to 30,000 oscillations per second and therefore constitute a wave of from 30,000 to 10,000 meters in length. The plate circuit of audion 23 is tuned to this wave by means of variable condenser 28 in shunt with the primary inductance of radio frequency transformer 31 permitting that wave to be transferred by virtue of the coupling between the primary inductance and the secondary winding of the transformer 31 to the oscillating bulb 35 whose oscillations are combined with the oscillations transferred from bulb 23 in such a way as to produce an audible signal which in turn is amplified by the circuits 37 and 38 to actuate telephone receivers 39 to reproduce only the telegraph signals. This action has the effect of double heterodyne for the signal oscillations in the antenna circuit are superimposed upon bulb circuit 23 which is in itself generating local oscillations thus producing a beat effect in the primary winding of the transformer 31 which in turn interacts with the local oscillations produced in the oscillating circuit 35, thereby producing a second beat of audible frequency. This audible beat telegraphic signal is amplified by circuits 37 and 38 and operates telephone receivers 39. This method of telegraph reception prevents the telegraph signals from affecting the circuits in which the telephone conversation is pieced together.

In the operation of the telephone receiving apparatus the blocks of telephone speech

are received and made intelligible by adjusting the couplings in the two oscillatory circuits 42 and 43 and tuning them to the two intermittent wave lengths of the signal carrier wave and the carrier wave. The blocks of speech received on the two wave lengths are combined in the output circuits of the two audion systems by means of differential audio frequency transformer 46, and amplified in circuits 48 and 49 by thermionic amplifiers and made audible in telephone receivers 50. By suitable adjustment of tuning and coupling the two parts of the speech in primary windings 44 and 45 of the differential audio frequency transformer 46 are combined in a common secondary winding 47.

In the practical operation of this simultaneous telegraph and secret telephone system, the apparatus is adjusted as follows: When the transmitting station starts with simultaneous test signals on both telegraph and telephone, bulb 23 is turned on. The primary windings 15 and 17, together with condenser 16, are adjusted to the signal carrier wave. The secondary 20 of the telegraph receiver is adjusted to resonance with the antenna circuit with the bulb 23 oscillating and the coupling between coils 15 and 20 very loose, as determined by test telephone receivers 32 in the plate circuit of the bulb 23. The bulb 35 is now turned on and allowed to oscillate. Amplifiers 37 and 38 are next turned on. The windings of the radio frequency transformer are next tuned by varying the shunted condensers, and the telegraph signals obtained in the telephone receivers 39 by means of the double heterodyne effect as previously described.

The telephone receiving apparatus is adjusted by first turning on the bulb 42 and amplifiers 48 and 49 and the fragmentary speech superimposed on the signal carrier wave tuned in by means of secondary 40 with condenser 51 using as loose a coupling as is consistent with satisfactory audibility. Bulb 42 is then turned off and the bulb 43 turned on and the component part of the telephone speech superimposed on the carrier wave tuned in to approximately the same audibility as the first component of the telephone speech by adjustment of antenna circuit 18 and 19 with secondary 41 and condenser 52. Bulb 42 should again be turned on and slight adjustment of coupling of secondary 40 made to correct any difference which may exist between the audibilities of the two blocks of speech. The thermionic amplifiers 48 and 49 are manipulated as usual to produce maximum audibility of speech in telephone receivers 50. By accurate adjustment of the two circuits the telephone conversation will be immune from interference by the telegraph signals recorded in the telephone receivers 39.

While I have described the system as being capable of transmitting telegraphic signals and telephonic conversation simultaneously it is obvious that speech alone can be secretly transmitted without the accompaniment of telegraphic signals by intermittently tapping the signal control means at the transmitting station.

Having thus described my invention, what I claim and desire to secure by Letters Patent is:

1. In a system for transmitting and receiving telegraphic signals and telephonic conversation simultaneously, the combination of means for transmitting telephone conversation intermittently on two widely different wave lengths and telegraphic signals on one of said wave lengths and a receiver comprising an antenna circuit, three oscillatory circuits associated therewith, one of said circuits being arranged to respond to the telegraphic signals and the remaining two oscillatory circuits arranged to combine the intermittent parts of the telephone conversation.

2. The combination in a sustained wave radio system for receiving or transmitting telegraphic signals and telephonic conversation simultaneously; at the transmitting station means for superimposing blocks of telephonic conversation on two widely different wave lengths intermittently and at the same time emitting telegraphic signals on one of the wave lengths; at the receiving station means for combining the blocks of telephonic conversation received on different wave lengths and separate double heterodyne means for receiving the telegraphic signals on one of the two wave lengths.

3. The combination in an apparatus for simultaneously receiving telephonic conversation and telegraphic signals, of separate circuits for receiving the telephone conversation intermittently on two widely different wave lengths and separate double heterodyne means for receiving the telegraphic signals on one of the two wave lengths.

ALBERT HOYT TAYLOR.