J. D. REIFSNYDER & H. G. SCHWERDTLE.

PRINTING PRESS.

APPLICATION FILED FEB. 3, 1914.

1,164,212.

Patented Dec. 14, 1915.

2 SHEETS—SHEET 1.

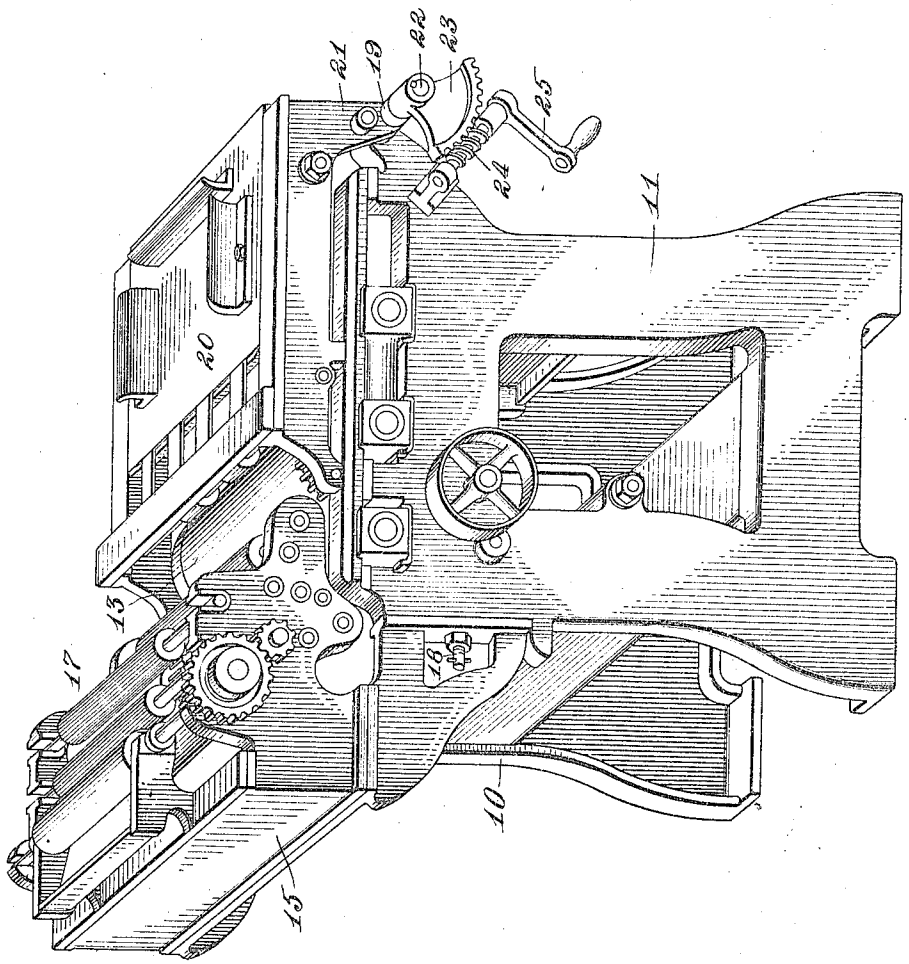

Fig. 1.

Witnesses
H. C. Robinett
A. P. Hollingsworth

Inventors
J. D. Reifsnyder
H. G. Schwerdtle

By Lyon & Lyon
Attorneys

J. D. REIFSNYDER & H. G. SCHWERDTLE.

PRINTING PRESS.

APPLICATION FILED FEB. 3, 1914.

1,164,212. Patented Dec. 14, 1915.

2 SHEETS—SHEET 2.

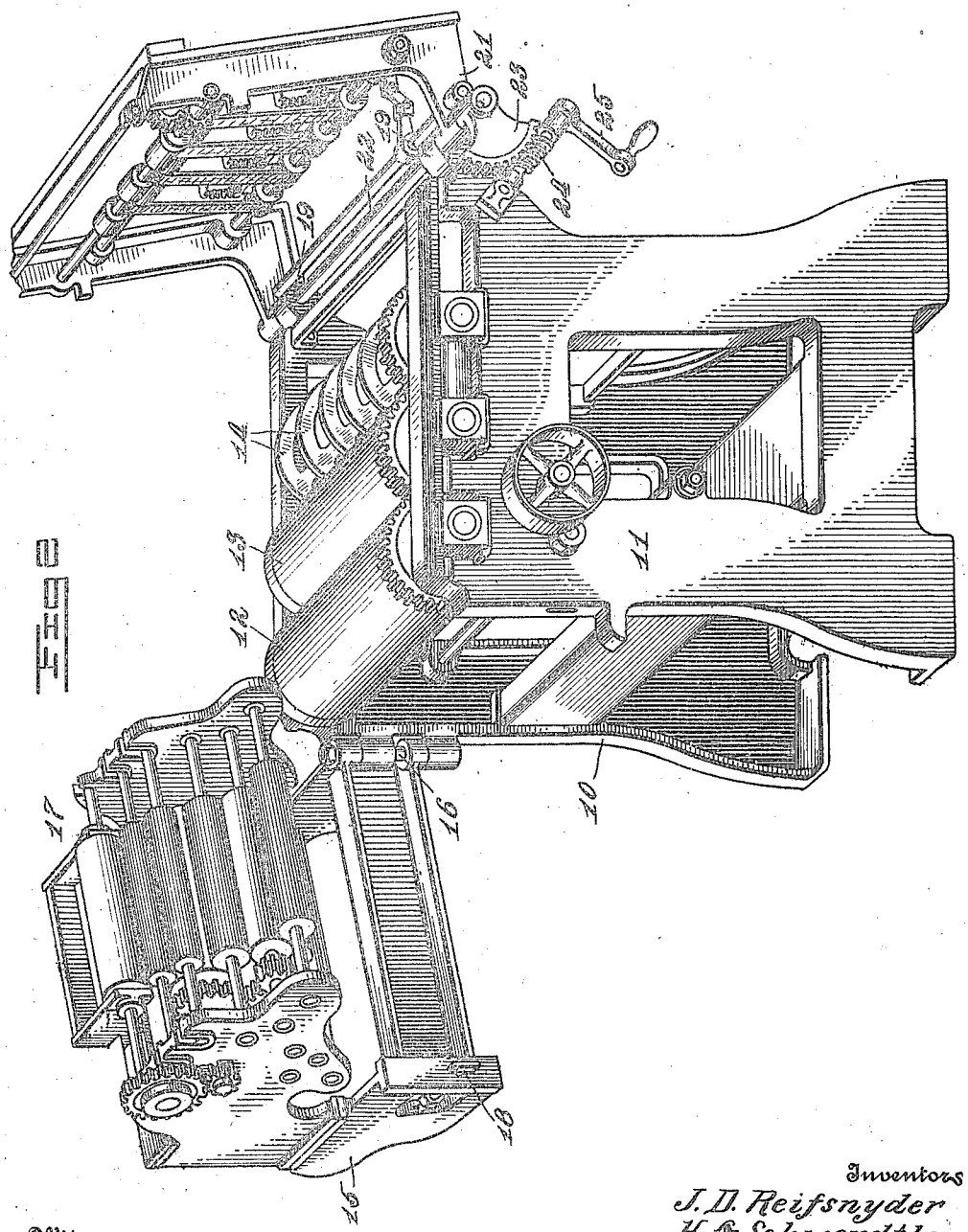

Fig 2

Witnesses

H. G. Robinette

S. P. Hollingsworth

Inventors

J. D. Reifsnyder

H. G. Schwerdtle

By Langner, Cushman & Co

Attorneys

UNITED STATES PATENT OFFICE.

JAMES D. REIFSNYDER AND HENRY G. SCHWERDTLE, OF PHILADELPHIA, PENNSYLVANIA, ASSIGNORS TO STOKES & SMITH COMPANY, OF SUMMERDALE, PENNSYLVANIA, A CORPORATION OF PENNSYLVANIA.

PRINTING-PRESS.

1,164,212. Specification of Letters Patent. Patented Dec. 14, 1915.

Application filed February 3, 1914. Serial No. 816,200.

To all whom it may concern:

Be it known that we, JAMES D. REIFSNYDER and HENRY G. SCHWERDTLE, citizens of the United States, residing at Philadelphia, in the State of Pennsylvania, have invented new and useful Improvements in Printing-Presses, of which the following is a specification.

This invention relates to printing presses, particularly to rotary printing presses, and has for its object to provide a simple, compact machine in which the form cylinder, impression cylinder and take-off cylinder are arranged in parallel at the top of the main frame, their axes lying in a common horizontal plane. Above the impression and take-off cylinders and normally overlying the same is a feed table upon which the sheets to be printed are placed and automatically fed to the impression cylinder, said table being hinged to the front of the machine at the top thereof in such position that it may be swung upwardly and away from the aforesaid cylinders to expose them to view and provide easy access thereto. At the rear of the machine the inking mechanism is carried in a swinging frame hinged to the main frame on a vertical axis whereby said frame and inking mechanism may be swung to one side entirely free of the form cylinder giving ready access thereto. The feed table and inking mechanism hinged to the machine frame in the manner set forth may be quickly and easily swung away therefrom to completely expose the several working cylinders and enable the operator to quickly change the form on the form cylinder or the cylinder itself, renew the blanket on the impression cylinder, and do any other thing necessary thereto, or to the take-off cylinder.

In the drawings, Figure 1 is a perspective view of the complete press ready for printing. Fig. 2 is a similar view with the feed table and inking mechanism swung open to expose the form, impression and take-off cylinders.

In the drawings, 10 and 11 are two upright frame plates on opposite sides of the machine that are connected together by suitable cross-bars and braces which as a whole form the main frame of the printing press. At the top of the main frame near the rear thereof is journaled a form cylinder 12 in front of which is an impression cylinder 13 while in front of the impression cylinder is a take-off cylinder 14, the latter cylinder, as is common in printing presses, being made of a plurality of spaced rings mounted on a shaft, each of said rings forming a complete circle, or a portion of a circle, as circumstances demand. These three cylinders are arranged in parallel relation with their axes lying in a common horizontal plane, as shown, near the top of the main frame, whereby the tops of the cylinders project above the frame as clearly shown in Fig. 2, that easy access may be had thereto.

At the rear of the machine is arranged a swinging frame 15 hinged on a vertical stem 16 to the side plate 10, said swinging frame carrying the entire inking mechanism 17 of the printing press. The swinging frame 15 when closed against the machine frame of the printing press as in Fig. 1 carries the inking mechanism into operative relation with the form cylinder 12, and when swung outwardly into the position shown in Fig. 2, or farther if desired, the form cylinder is fully exposed and an operator may without trouble change the form upon the cylinder to suit the demand of his work, or remove the cylinder and insert a new one in its place with no inconvenience. The rolls of the inking mechanism when the swinging frame is open, are also in a convenient position to be removed, cleaned and changed as desired. When the swinging frame is in closed position, as in Fig. 1, it is held firmly in place by means of a latch or other fastening 18 that engages with a socket in the side frame 11.

Pivoted in bearings 19 on the front of the side plates 10, 11, near the top thereof, is a feed table 20 that overlies and normally obstructs access to the impression roll 13 and take up roll 14, said table having depending legs 21 affixed to a horizontal shaft 22 that turns in the bearings 19 when the table is swung upwardly to expose the impression and take off cylinders as in Fig. 2. The feed table may be raised directly by hand or in the manner shown in the drawings, wherein a toothed segment 23 is affixed to the outer end of the shaft 22, the teeth on said segment being engaged by a worm 24 mounted in bearings on the main frame and rotated by a handle 25. By these means the

feed table may be raised or lowered with very little labor.

A printing press constructed as described is simple, compact and very accessible, no trouble being experienced in changing printing forms, the blanket on the impression roller, and doing any repairs that may be required to the several cylinders. The inking rolls are also fully exposed and in convenient position to be removed for cleaning and renewal. But a few moments are required to open up the press as in Fig. 2, or returning the swinging frame 15 and the feed table 20 to operative positions, a few turns of the crank 25 raising or lowering the feed table 20 and a slight turn of the latch 18 engages or disengages the swinging frame which may then be opened or closed.

What is claimed is,—

1. A printing press embodying a main frame, a form cylinder, an impression cylinder, and a take-off cylinder arranged in parallel, journaled in top of the main frame and extending above the same, the axes of said cylinders lying in a common horizontal plane, a horizontally swinging frame hinged to the rear of the main frame, an inking mechanism carried thereby, said swinging frame movable on its axis toward the form cylinder to bring the inking mechanism into operative relation therewith and away from said cylinder to expose the same and permit easy access thereto, and a vertically swinging feed table hinged to the front of the main frame and extending over the impression and take-off cylinders adapted to be turned upward from said cylinders to permit access thereto.

2. A printing press embodying a main frame, a form cylinder, an impression cylinder, and a take-off cylinder arranged in parallel, journaled in the top of the main frame and extending above the same, the axes of said cylinders lying in a common horizontal plane, a horizontally swinging frame hinged to the rear of the main frame, an inking mechanism carried thereby, said swinging frame movable on its axis toward the form cylinder to bring the inking mechanism into operative relation therewith and away from said cylinder to expose the same and permit easy access thereto, a vertically swinging feed table hinged to the front of the main frame and extending over the impression and take-off cylinders adapted to be turned upward from said cylinders to permit access thereto, and means comprising a worm, and a toothed segment fixed to the feed table for raising and lowering the same.

3. A printing press embodying a main frame, a form cylinder, an impression cylinder and a rotary take-off arranged in parallel; journaled in the upper part of the main frame and having portions thereof projecting above the frame, the axes of said cylinders and take-off lying in a common horizontal plane, a vertically swinging feed-table hinged to the main frame normally obstructing access to said cylinders on their upper side and movable toward and from the said cylinders and take-off, and means for positively moving said table into a substantially vertical position to give access to said cylinders.

In testimony whereof we have hereunto set our hands in presence of two subscribing witnesses.

JAMES D. REIFSNYDER.
HENRY G. SCHWERDTLE.

Witnesses:
CARL E. SCHAEFFER,
SILAS E. CHILD.