(12) STANDARD PATENT (11) Application No. **AU 2012314630 B2**
(19) AUSTRALIAN PATENT OFFICE

(54) Title
Shaft with a flange connection

(51) International Patent Classification(s)
F16C 3/02 (2006.01) ***F16C 13/00*** (2006.01)
B02C 4/28 (2006.01) ***F16D 1/033*** (2006.01)
B30B 3/00 (2006.01)

(21) Application No: **2012314630** (22) Date of Filing: **2012.09.20**

(87) WIPO No: **WO13/045334**

(30) Priority Data

(31) Number	(32) Date	(33) Country
202011106443.7	**2011.09.28**	**DE**

(43) Publication Date: **2013.04.04**
(44) Accepted Journal Date: **2017.04.13**

(71) Applicant(s)
KHD Humboldt Wedag GmbH

(72) Inventor(s)
Frangenberg, Meinhard

(74) Agent / Attorney
Spruson & Ferguson, L 35 St Martins Tower 31 Market St, Sydney, NSW, 2000, AU

(56) Related Art
DE 3639586 A1
US 4080704 A

(12) NACH DEM VERTRAG ÜBER DIE INTERNATIONALE ZUSAMMENARBEIT AUF DEM GEBIET DES PATENTWESENS (PCT) VERÖFFENTLICHTE INTERNATIONALE ANMELDUNG

(19) Weltorganisation für geistiges Eigentum
Internationales Büro

(43) Internationales Veröffentlichungsdatum
4. April 2013 (04.04.2013)

WIPO | PCT

(10) Internationale Veröffentlichungsnummer
WO 2013/045334 A1

(51) Internationale Patentklassifikation:
F16C 3/02 (2006.01) *B30B 3/00* (2006.01)
F16C 13/00 (2006.01) *B02C 4/28* (2006.01)
F16D 1/033 (2006.01)

(21) Internationales Aktenzeichen: PCT/EP2012/068500

(22) Internationales Anmeldedatum:
20. September 2012 (20.09.2012)

(25) Einreichungssprache: Deutsch

(26) Veröffentlichungssprache: Deutsch

(30) Angaben zur Priorität:
202011106443.7
28. September 2011 (28.09.2011) DE

(71) Anmelder: **KHD HUMBOLDT WEDAG GMBH** [—/DE]; Colonia-Allee 3, 51067 Köln (DE).

(72) Erfinder: **FRANGENBERG, Meinhard**; Grüner Winkel 8, 51515 Kürten (DE).

(81) Bestimmungsstaaten *(soweit nicht anders angegeben, für jede verfügbare nationale Schutzrechtsart)*: AE, AG, AL, AM, AO, AT, AU, AZ, BA, BB, BG, BH, BN, BR, BW, BY, BZ, CA, CH, CL, CN, CO, CR, CU, CZ, DK, DM, DO, DZ, EC, EE, EG, ES, FI, GB, GD, GE, GH, GM, GT, HN, HR, HU, ID, IL, IN, IS, JP, KE, KG, KM, KN, KP, KR, KZ, LA, LC, LK, LR, LS, LT, LU, LY, MA, MD, ME, MG, MK, MN, MW, MX, MY, MZ, NA, NG, NI, NO, NZ, OM, PA, PE, PG, PH, PL, PT, QA, RO, RS, RU, RW, SC, SD, SE, SG, SK, SL, SM, ST, SV, SY, TH, TJ, TM, TN, TR, TT, TZ, UA, UG, US, UZ, VC, VN, ZA, ZM, ZW.

(84) Bestimmungsstaaten *(soweit nicht anders angegeben, für jede verfügbare regionale Schutzrechtsart)*: ARIPO (BW, GH, GM, KE, LR, LS, MW, MZ, NA, RW, SD, SL, SZ, TZ, UG, ZM, ZW), eurasisches (AM, AZ, BY, KG, KZ, RU, TJ, TM), europäisches (AL, AT, BE, BG, CH, CY, CZ, DE, DK, EE, ES, FI, FR, GB, GR, HR, HU, IE, IS, IT, LT, LU, LV, MC, MK, MT, NL, NO, PL, PT, RO, RS, SE, SI, SK, SM, TR), OAPI (BF, BJ, CF, CG, CI, CM, GA, GN, GQ, GW, ML, MR, NE, SN, TD, TG).

Veröffentlicht:

— *mit internationalem Recherchenbericht (Artikel 21 Absatz 3)*

(54) **Title**: SHAFT WITH A FLANGE CONNECTION

(54) **Bezeichnung** : WELLE MIT FLANSCHVERBINDUNG

FIG. 1

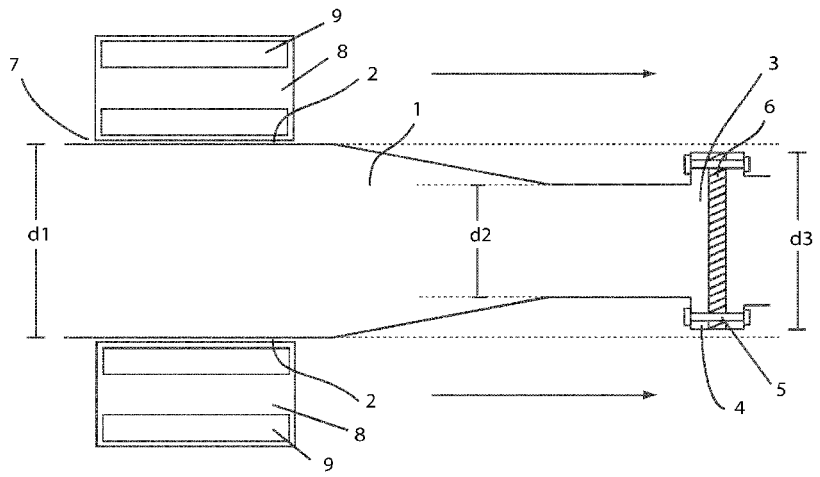

(57) **Abstract**: The invention relates to a flange connection on a shaft (1) having at least two diameters (d1, d2) of different size, wherein the diameter (d3) of the flange connection is smaller than the diameter (d1) of the rolling bearing seat (2). Machine parts on the shaft can thereby be rapidly and simply interchanged without the flange (3) having to be removed in the process.

(57) **Zusammenfassung**: Die Erfindung betrifft eine Flanschverbindung auf einer Welle (1) mit mindestens zwei verschieden großen Durchmessern (d1, d2), wobei der Durchmesser (d3) der Flanschverbindung kleiner ist als der Durchmesser (d1) des Wälzlagersitzes (2). Maschinenteile auf der Welle können dadurch schnell und einfach ausgetauscht werden, ohne dass der Flansch (3) dabei entfernt werden muss.

WO 2013/045334 A1

2012314630 21 Mar 2017

FLANGE CONNECTION

The invention relates to a flange connection on a shaft, which flange connection makes it possible to replace machine parts on the shaft rapidly and simply, without the flange having to be removed in the process.

Flange is generally used to denote an attachment to components such as pipes, shafts or housings, which attachment serves to connect or to couple the respective component to another element. A characteristic of the flange is the flange plates which surround the elements in a circularly annular manner at their connecting point and by way of which the flange is connected by pressing onto one another. The connection can be of irreversible design, for example by welding of the flange plates, or else of reversible design, for example by screwing of the flange plates to holes which are provided for this purpose.

In engineering, flanges are frequently used for the leadthrough of shafts, for example in the case of planetary gear mechanisms between the gear mechanism and the shaft. In its simplest form, a shaft is a rod-shaped machine element which is used to transmit rotational movements and torques and to mount rotating parts.

Here, in addition to the pure positioning of the shaft with respect to the gear mechanism, the flange also assumes the task of absorbing the torsional forces which are transmitted during the rotation of the shaft.

Planetary gear mechanisms are used, inter alia, in roll presses. Roll presses usually consist of two equally large, rotatably mounted rolls which rotate in each case in the opposite direction at an identical circulating speed and between which the material to be milled is pressed through and comminuted. The drive of the very heavy rolls which can be 50 t or more per item requires the transmission of a very high torque which is transmitted to the flange. The flange connection is therefore exposed to a continuous, considerable loading during operation of the rolls. In order that the flange is not broken or deformed under this loading, the flange is of more or less wide design, that is to say it comprises relatively large flange plates which ensure a sufficiently large frictional area between the flange plates, as a result of which the force is distributed to a correspondingly large frictional area. As a result, the flange gains stability. However, a large flange also has the consequence that the diameter of the flange is considerably

2012314630 21 Mar 2017

greater than the diameter of the shaft. This in turn has the disadvantage that the machine elements which are arranged on the shaft can then no longer be readily removed at the hub along the shaft, since they then no longer fit through the wider flange, which presents a great obstacle, for example, when replacing rolls or the antifriction bearings in roll presses.

This problem is usually solved by a section of the shaft between the shaft and flange being connected releasably to one another, with the result that the flange can be separated from the shaft. This can take place, for example, by use of a mechanical or hydraulic shrink disk. A shrink disc is a likewise flange-shaped, non-positive shaft/hub connection which is applied to the shaft from the outside and which generates pressure on the shaft as a result of the reduction of its internal diameter via conical pressing faces of the outer parts, as a result of which a frictional connection is produced between the shaft and the hub by way of a press fit. The disadvantage of a shrink disk is, however, that the shrink disk has to be dismantled every time in order to replace the rolls and has to be mounted again after the replacement, which increases the time spent on the replacement considerably, particularly in the case of mechanical shrink disks.

A solution would therefore be desirable, by way of which the elements which are fastened to a shaft can be removed and replaced in a rapid and uncomplicated manner without further intermediate steps.

It is an object of the present invention to at least substantially satisfy the above desire.

The present invention provides an antifriction bearing mounted shaft of a high pressure roll press, the shaft having at least one flange, wherein the shaft has at least two diameters of different size and the diameter of the flange is smaller than the diameter of an antifriction bearing seat.

By virtue of the fact that the shaft has diameters of different size, according to an embodiment of the invention the flange can then be attached at a relatively narrow location of the shaft. It is possible in this way, despite the flange plates, to keep the diameter of the flange connection smaller than the wider diameter of the shaft, on which the antifriction bearing is situated. This has the advantage that the antifriction bearing which is attached to the hub, or further machine elements, can be removed simply by being guided along the shaft, without the flange impeding the removal. In this way, the antifriction bearing can be replaced relatively simply and rapidly.

2012314630 21 Mar 2017

Since the flange does not have to be removed in order to remove the antifriction bearing, the use of an expensive hydraulic or mechanical shrinking means can therefore be omitted.

It is a further advantage of the construction according to an embodiment of the invention that merely one force direction is required to move the elements in order to replace the elements. This is preferable particularly in the case of the very large and heavy rolls of the roll presses, since their movement requires a large exertion of force and a special lifting device is usually required. By way of the construction according to an embodiment of the invention, in contrast, the element is moved only in the axial direction of the shaft, which considerably facilitates the replacement.

The shaft usually has a circular cross section; in principle, however, cross sections which differ herefrom are also conceivable. For example, the cross section can be oval or star-shaped. The diameter is then defined as the greatest possible distance of two points which are situated on the cross section.

Since, according to an embodiment of the invention, the diameter of the flange is not greater than the widest region of the shaft, the flange plates also must not be too wide. However, a comparatively small flange results correspondingly in a relatively small contact area of the flange plates. As a consequence, the torque during the rotation of the shaft is transmitted to a relatively small area of the flange. It is therefore provided in one preferable embodiment of the invention to insert one or more friction disks having a high coefficient of friction between the flange. The friction disks ensure an increase in the static friction between the flange and therefore bring about greater stability of the flange connection. As a result, the diameter of the flanges can be kept small.

In a further preferable refinement of the invention, the flange is forged on the shaft. Since the removal is no longer required, the more complicated screw connection is superfluous. In addition, a welded flange also has a relatively high mechanical stability.

The flange can also have more than two diameters. For example, the diameter of the shaft can decrease in steps in the direction of the flange. It is also conceivable that the shaft tapers conically in the axial direction.

2012314630 21 Mar 2017

A preferred embodiment of the invention will be described hereinafter, by way of example only, with reference to the accompanying drawing.

Fig. 1 shows a shaft 1 which has a diameter d1 at the location of the antifriction bearing seat 2. The shaft 1 tapers conically in the direction of the flange 3 and has a diameter d2 in the narrower region. The flange 3 is situated with the flange plates 4 at the narrower end of the shaft 1 with a diameter d3, which flange 3 is forged on the shaft 1 in this example and is therefore in one piece with the shaft. The flange is connected to the flange plates 4 by screws 5. In order to transmit the torque, a friction disk 6 is attached between the flange, which friction disk 6 ensures that the forces which are caused by the rotation are distributed homogeneously on the flange plates 4. On the wider end of the shaft 1, an antifriction bearing 8 with the rolling bodies 9 which are situated therein is attached at the hub 7. The diameter d3 of the flange connection 3 is somewhat smaller than the inner diameter d1, on which the antifriction bearing 8 is situated. It is therefore possible, after release of the flange connection 3 by removal of the screws 5, to remove the antifriction bearing 8 at the hub 7 along the arrow direction on the shaft, without the flange being an obstacle in the process.

LIST OF DESIGNATIONS

1	Shaft
2	Antifriction bearing seat
3	Flange
4	Flange plates
5	Screw
6	Friction disk
7	Hub
8	Antifriction bearing
9	Rolling body
d1, d2	Diameter of the shaft
d3	Diameter of the flange connection

2012314630 21 Mar 2017

CLAIMS

1. An antifriction bearing mounted shaft of a high pressure roll press, the shaft having at least one flange, wherein the shaft has at least two diameters of different size and the diameter of the flange is smaller than the diameter of an antifriction bearing seat.

2. The antifriction bearing mounted shaft as claimed in claim 1, wherein the flange is forged on the shaft.

3. The antifriction bearing mounted shaft as claimed in any one of the preceding claims, wherein the shaft tapers partially conically in the axial direction.

4. The antifriction bearing mounted shaft as claimed in any one of the preceding claims, wherein one or more friction disks are inserted between the flange in order to increase the static friction.

5. The antifriction bearing mounted shaft as claimed in any one of the preceding claims, wherein the flange is connected by screws or by welding.

KHD Humboldt Wedag GmbH
Patent Attorneys for the Applicant/Nominated Person
SPRUSON & FERGUSON

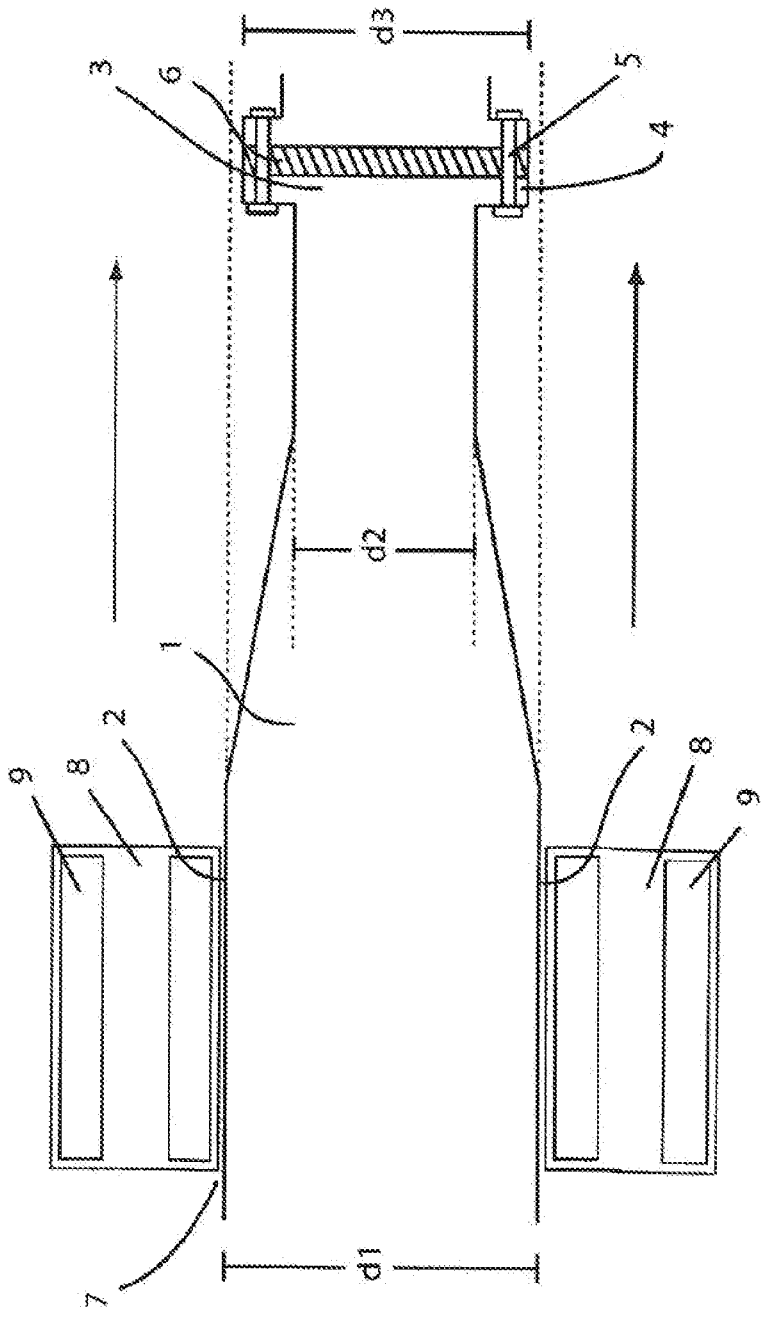

FIG. 1