(12) UK Patent Application (19) GB (11) 2 155 115 A

(43) Application published 18 Sep 1985

(21) Application No 8504306

(22) Date of filing 20 Feb 1985

(30) Priority data

(31) 84/029653 (32) 21 Feb 1984 (33) JP

(51) INT CL[4]
F04B 49/00 27/08

(52) Domestic classification
F1W 104 204 402 408 500 GL
U1S 1966 F1W

(56) Documents cited
GB 1558685 GB 1412776
GB 1533212 EP A1 0102691

(58) Field of search
F1W

(71) Applicant
Sanden Corporation, (Japan),
20 Kotobuki-cho, Isesaki-shi, Gunma-ken, Japan

(72) Inventor
Kiyoshi Terauchi

(74) Agent and/or address for service
Mathys & Squire, 10 Fleet Street, London, EC4Y 1AY

# (54) Controlling swash-plate pumps

(57) A pump for refrigerant has pistons 29 sliding in cylinders 28 the reciprocation being produced by linked wobble plate 21 which rocks, but not rotates, about ball 231. This action is caused by the rotation of angle plate 19, running on boss 194 of wobble plate 21 and hinged to plate 181 driven by shaft 15. Refrigerant is supplied via suction chamber 121 and pumped into chamber 122.

The pumping rate is controlled by the pressure in crank chamber 13, arising from the blow-by of gas past the pistons 29. The higher this is, the greater the action on the piston underside and the more perpendicular the wobble plate. The pressure is regulated by valve 31, which permits the required amount to be removed via line 30 to the suction chamber 121.

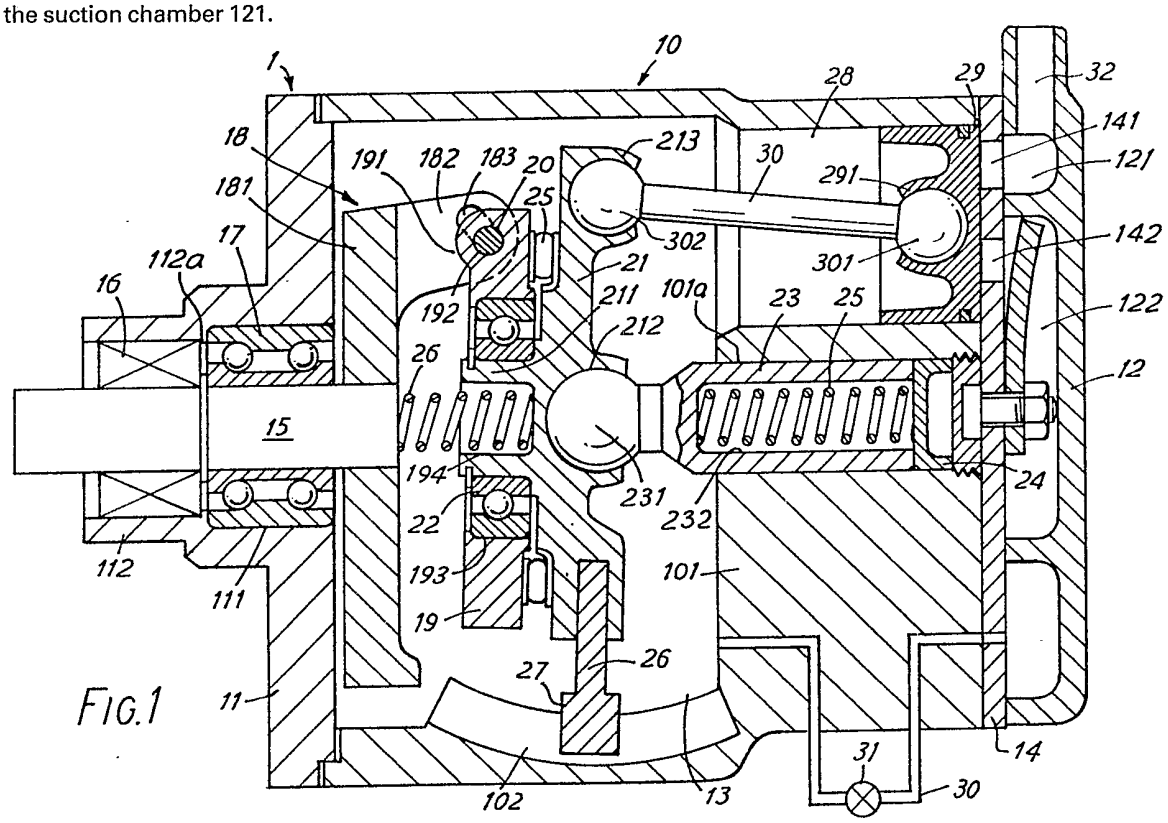


FIG.1

GB 1 155 115 A

The drawing originally filed was informal and the print here reproduced is taken from a later filed formal copy.

2155115

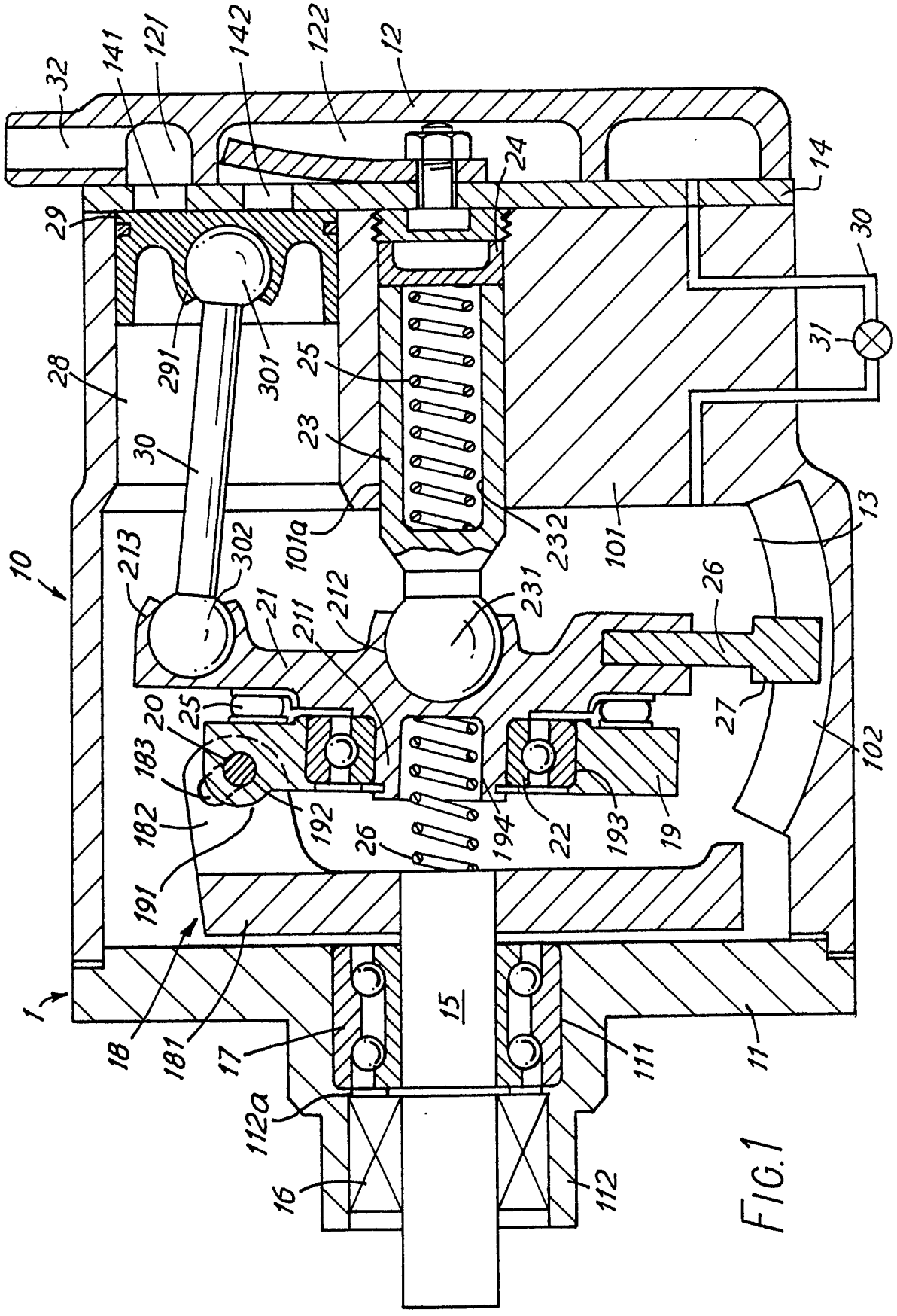


FIG.1

SPECIFICATION

**Refrigerant Compressor**

The present invention relates to a refrigerant compressor, and more particularly, to a wobble plate type compressor for an air conditioning system in which the compressor includes a mechanism for adjusting the capacity of the compressor.

Generally, in air conditioning apparatus, thermal control is accomplished by intermittent operation of the compressor in response to a signal from a thermostat located in the room being cooled. Once the temperature in the room has been lowered to a desired temperature, the refrigerant capacity of the air conditioning system generally need not be very large in order to handle supplemental cooling because of further temperature changes in the room or for keeping the room at the desired temperature. Accordingly, after the room has cooled down to the desired temperature, the most common technique for controlling the output of the compressor is by intermittent operation of the compressor. However, this intermittent operation of the compressor results in the intermittent application of a relatively large load to the driving mechanism of the compressor in order to drive the compressor.

In automobile air conditioning compressors, the compressor is driven by the engine of the automobile through an electromagnetic clutch. These automobile air conditioning compressors face the same intermittent load problems described above once the passenger compartment reaches a desired temperature. Control of the compressor normally is accomplished by intermittent operation of the compressor through the electromagnetic clutch which couples the automobile engine to the compressor. Thus, the relatively large load which is required to drive the compressor is intermittently applied to the automobile engine.

Furthermore, since the compressor of an automobile air conditioner is driven by the engine of the automobile, the rotation frequency of the drive mechanism changes from moment to moment, which causes the refrigerant capacity to change in proportion to the rotation frequency of the engine. Since the capacity of the evaporator and the condenser of the air conditioner does not change, when the compressor is driven at high rotation, the compressor performs useless work. To avoid performing useless work, prior art automobile air conditioning compressors often are controlled by intermittent operation of the magnetic clutch. Again, this results in a large load being intermittently applied to the automobile engine.

One solution to above mentioned problems is control the capacity of the compressor in response to refrigeration requirements. One of construction to adjust the capacity of compressor, particularly for a wobble plate type compressor, is disclosed in the U.S. Patent No. 3,861,829 issued to Roberts et al. That prior art is disclosed the wobble plate type compressor which has a cam rotor driving device to respectively drive a plurality of pistons and varying the slant angle of the slant surface to accomplished the change of stroke length of pistons. Since the stroke length of pistons within cylinders is directly responsed to the slant angle of the slant surface, the displacement of compressor is easily adjusted by change of slant angle. Furthermore, change of slant angle is accomplished by the pressure difference between a suction chamber and crank chamber in which the driving device is disposed.

In these prior art capacity adjusting mechanism, construction to vary the slant angle of cam rotor in response to the refrigeration requirements is compricated and enlarged the outer dimension of the compressor. Also, since a large bore is formed through each of wobble plate and cam rotor for penetration the drive shaft and for enabling the change of slant angle, wobble plate causes useless vibration.

It is a primary object of this invention to provide an improved refrigerant compressor in which a simple variable angle mechanism for cam rotor driving device is contained.

It is another object of this invention to provide a refrigerant compressor wherein vibration of a wobble plate is reduced.

It is still another object of this invention to accomplished the above objects with simple in construction and small in size.

A refrigerant compressor according to this invention includes a compressor housing having a cylinder block with a plurality of cylinders and crank chamber adjacent the cylinder block. A piston is slidably disposed within each cylinders and reciprocated by a wobble plate driven by an input cam rotor. The cam rotor is provided with a sloping surface in close proximity to the wobble plate. A drive shaft is connected to the cam rotor and rotatably supported by the compressor housing. A front end plate, which rotatably supports the drive shaft through a bearing, is disposed on an opening of the crank chamber. A rear end plate, which is disposed on the opposite end of the housing, includes a suction chamber and a discharge chamber for refrigerant. The rear end plate is fixed on the housing together with a valve plate. The crank chamber and the suction chamber are connected by a passage, the opening and closing of which are controlled by a control means.

The cam rotor comprises a rotor member fixed on the drive shaft and a slant plate formed on the sloping surface and connected to the rotor member by a hinge coupling for enabling to vary the slant angle thereof. The wobble plate of which wobbling center is lay on the axis of drive shaft is nutatably supported on a ball element fixed on a supporting rod, and the supporting rod is slidably disposed in the cylinder block for enabling to axial movement along the axis of the drive shaft.

The invention will now be described, by way of example, with reference to Figure 1 of the accompanying drawings, which is a vertical sectional view of a refrigerant compressor according to the preferred embodiment of this invention.

Referring to Figure 1, a refrigerant compressor according to this invention is shown. The

compressor, which is generally indicated by reference number 1, includes closed cylinder housing assembly 10 formed by cylinder block 101, a hollow portion such as crank chamber 13, front end plate and rear end plate 12.

Front end plate 11 is mounted on the left end portion of crank chamber 13 by a plurality of bolts (not shown). Rear end plate 12 and valve plate 14 are mounted on cylinder block 101 by a plurality of bolts (not shown). An opening 111 is formed in front end plate 11 for receiving drive shaft 15. An annular sleeve 112 projects from the front end surface of front end plate 11 and surrounds drive shaft 15 to define a shaft seal cavity 112a. A shaft seal assembly 16 is assembled on drive shaft 15 within the shaft seal cavity 112a.

Drive shaft 15 is rotatably supported by front end plate 11 through bearing 17, which is disposed within opening 111. The inner end of drive shaft 15 is provided with a swash plate or cam rotor device 18. The outer end of drive shaft 15, which extend outwardly from sleeve 112, is operatively connected to the engine of the vehicle through a pulley arrangement which will be disposed around the outer portion of sleeve 112.

Cam rotor device 18 comprises plate body 181 fixed on inner terminal end of drive shaft 15 and arm portion 182 axially projecting from plate body 181. A rectangular hole 183 is formed through the outer end portion of arm portion 182. Ring plate member 19 which is functioned as slant plate provided with slant surface is coupled with outer end portion of arm plate 182 through coupling portion 191 formed on an outer peripheral portion thereof to face the arm portion 182. Penetrating hole 192 is formed through coupling portion 191. A pin 20 is disposed through penetrating hole 192 of coupling portion 191 and rectangular hole 183 of arm portion 182, therefore ring plate member 19 is rotatably coupled to plate body 181 to enable rotating motion about pin 20. Pin 20 also slidably extends in rectangular hole 183, therefore pin 20 is able to move along the hole 183. Above coupling construction between plate body 181 and ring plate member 19 is functioned as hinge mechanism.

The sloping surface of ring plate member 19 is placed in close proximity to the surface of wobble plate 21 which has an annular axial projection 211 to extend into central portion 193 formed through ring plate member 19. Therefore, ring plate member 19 is rotatably supported on annular axial projection 211 of wobble plate 21 through bearing 22. Furthermore, wobble plate 21 is nutatably but non-rotatably supported on ball portion 231 of ball socket member 23 which is disposed within central bore 101a formed in the central portion of cylinder block 101, i.e., concave portion 212 of wobble plate 21 is contact with the outer peripheral surface of ball portion 231 to enable the nutating but non-rotating movement of wobble plate 21. The axial position of ball socket member 23 within central bore 101a is determined by adjusting screw 24 screwed into threaded portion of central bore 101a, and coil spring 25 is disposed within blind bore 232 of ball socket member 23 to pushed the ball socket 23 against the wobble plate 21. Further coil spring 26 is placed between the end surface of plate body 181 and bottom surface of blind bore 194 formed in the center portion of annular axial projection 191 of wobble plate. Thus wobble plate 19 is usually pushed toward ball socket member 23. Thrust needle bearing 25 is disposed between the sloping surface of ring plate member 19 and wobble plate 21 to accomplish the smoothly rotatable motion of cam rotor device 18.

The rotation of wobble plate 21 is prevented by a guide pin or rod 26 which is fixedly disposed on the bottom end surface thereof. One end of rod 26 extends into longitudinal guide groove 102 formed on the inner peripheral surface of housing to permit reciprocating motion through guide member 27.

Cylinder block 101 has a plurality of annularly arranged cylinders 28 in which pistons 29 slids. A typical arrangement includes five cylinders, but a smaller or larger number of cylinders may be provided. All pistons 29 are connected to wobble plate 21 by connecting rods 30. Ball 301 at one end of rod 30 is received in socket 291 of piston 29 and ball 302 at other end of rod 30 is received in socket 213 of wobble plate 21. It should be understood that, although only one such ball socket connection is shown in Figure 1, there are a plurality of sockets arranged peripherally around wobble plate 21 to receive the balls of various rods, and that each piston 29 is formed with a socket for receiving the other ball of rod 30.

Rear end plate 12 is shaped to define suction chamber 121 and discharge chamber 122. Valve plate member 14, which is fastened to the end of cylinder block 101 by the screw together with rear end plate 12, is provided with a plurality of valved suction port 141 connected between suction chamber 121 and the respective cylinders 28, and a plurality of valved discharge port 142 connected between discharge chamber 122 and respective cylinders 28. Suitable reed valves for suction port 121 and discharge port 122 are described in U.S. Patent No. 4,011,029 issued to Shimizu.

As shown in Figure 1, crank chamber 13 is connected with suction chamber 121 through passageway 30 extending through cylinder block 101 and valve plate 12. The opening and closing of passageway 30 is controlled by magnetic valve means 31 disposed on midway portion of passageway 30.

In operation, drive shaft 15 is rotated by the engine of the vehicle through a pulley arrangement, and cam rotor device including ring plate member 19 is rotated together with drive shaft 15 to cause a non-rotatable nutating motion of wobble plate 21 about ball portion 231 of ball socket member 23. Rotating motion of wobble plate 21 is prevented by rod 26 which extends from wobble plate 21 and is slidably fitted into sliding groove 102 through guide member 27. As wobble plate 21 nutate, piston 29 reciprocate out of phase in their respective cylinders 28. Upon reciprocations of pistons 29, the refrigerant gas, which is introduced into suction chamber 121 from a fluid inlet port 32 formed on rear end plate 12, is taken into each cylinder 28

through suction port 141 and compressed. The compressed refrigerant is discharged to discharge chamber 122 from each cylinders 28 through discharge port 142, and therefrom into an external fluid circuit, for example, a cooling circuit, through a fluid output port (not shown). During operation of compressor, if magnetic valve means 31 is operated to open passageway 30, the pressure in crank chamber 13 is maintained at suction pressure, because crank chamber 13 communicates with suction chamber 121 of rear end plate 12 through passageway 30. In this condition, during the compression stroke of the pistons, reaction force of gas compression normally acts against wobble plate 21. The resultant force of that reaction is received by the hinge coupling connected between the plate body 181 and ring plate member 19, i.e., moment ($M_1$) to rotate the wobble plate, which causes by the reaction gas force acted on the piston is acted against the hinge coupling. Furthermore, if determine the moment $M_2$ which causes the difference of recoil strength between two coils 25, 26 and moment $M_3$ which causes the pressure difference between crank chamber 13 and suction chamber 121, only moment $M_2$ is opposed to the moment $M_1$ because pressure difference does not occure. Therefore, if recoil strength of both coil spring is determined to accomplish the $M_1 > M_2$, ring plate member 19 moves forward plate body 181. Thus, coupling portion 191 of ring plate member 19 is pushed upwardly end of rectangular hole 183, and slant angle of ring plate member 19 is maximized relative to the vertical plate through pin 20. This result in the maximum stroke of pistons 19 within cylinder 28 which corresponds to the normal refrigeration capacity of the compressor.

On the other hand, if passageway 30 is closed by magnetic valve means 31, the pressure in crank chamber 13 is gradually raised and narrow pressure difference occurs because blow-by gas, which leaks from the cylinder chamber to crank chamber 13 through a gap between the pistons and cylinders during the compression stroke, is contained in crank chamber 13. During the raising of pressure in crank chamber, the moment $M_3$ is generated and raised the magnitude of moment in response to raising of pressure in crank chamber 13. This moment $M_3$ is opposed to the moment $M_1$ so that, in the some point, total magnitude of moment $M_2$ and $M_3$ is exceeded the moment $M_1$. In this situation, moment of unti-clockwise direction about hinge coupling is acted against the ring plate member 19, therefore the slant angle of ring plate member 19 decreases. Decreasing of slant angle is continued until pin 20 is fitted against the lower end portion of rectangular hole 183. As to the decreases of slant angle, stroke of the piston in the cylinder is reduced and capacity of the compressor gradually decreases. Since it is indesirable to completely stop movement of the pistons because the flow of refrigerant gas and lubricating oil would also stop, some movement of the pistons should be maintained to continue lubricating the compressor.

As mention above, in this invention, the cam rotor device comprises a plate body and ring plate both of which are connected by the hinge coupling for enabling the vary of slant angle of ring plate, and wobble plate is nutatable supported on the ball joint mechanism to fixed the place of wobbling center. Therefore, the simple construction of varying the slant angle is accomplished and could be contained within small size compressor. Also, wobbling center of wabble plate is maintained by ball joint supporting mechanism, the useless vibration of the wobble plate is prevented.

Although the invention has been described in detail in connection with a preferred embodiment, it will be understood by these skilled in the art that this embodiment is only for illustrations. Various modifications may be made therein by one skilled in the art without departing from the scope or spirit of this invention, which is only limited by the appended claims.

CLAIMS

1. A refrigerant compressor including a compressor housing having a cylinder block provided with a plurality of cylinders and a crank chamber adjacent said cylinder block, a piston slidably fitted within each of said cylinders and reciprocated by a driving mechanism including a wobble plate, an input drive rotor and a drive shaft connected to said input drive rotor to drive said input drive rotor, a front end plate on said compressor housing including a bearing for rotatably supporting said drive shaft, a rear end plate disposed on an opposite end of said compressor housing and having a suction chamber and a discharge chamber, said crank chamber and said suction chamber being connected by a passageway and control means for controlling the opening and closing of said passageway, wherein said input drive rotor has a rotor member fixed on an inner terminal end of said drive shaft, and a slant plate formed with a sloping surface in close proximity to said wobble plate, said slant plate is hinged with said rotor member to vary the slant angle thereof, and said wobble plate is nutatably supported on a supporting member which is axially slidably disposed in said cylinder block.

2. The refrigerant compressor of claim 1, wherein said slant plate is usually pushed against said wobble plate by a first elastic element, and said supporting member is usually pushed against said wobble plate by a second elastic element.

3. The refrigerant compressor of claim 2, wherein said first and second elastic elements are coil springs.

4. The refrigerant compressor of claim 1, wherein said slant plate is rotatably supported on said wobble plate through a bearing.

5. The refrigerant compressor of claim 4, wherein said wobble plate has an annular boss at a central portion thereof which extends into a central bore in said slant plate, and said bearing is disposed in a gap between said central bore and said annular boss to rotatably support said slant plate on said wobble plate.

6. The refrigerant compressor of claim 1, wherein said rotor member is provided with an axially

extending arm portion and a rectangular shaped hole is formed through an outer end portion of said arm portion, said slant plate has a coupling portion at a position corresponding to said arm portion which is formed with a pin hole, and a pin which extends into said pin hole and rectangular hole is connected between said rotor plate and said slant plate to enable a rotating movement of said slant plate about said pin.

7. A refrigerant compressor constructed, arranged and adapted to operate substantially as hereinbefore described with reference to, and as illustrated in, the accompanying drawing.

Printed for Her Majesty's Stationery Office by Courier Press, Leamington Spa. 9/1985. Demand No. 8817443.
Published by the Patent Office, 25 Southampton Buildings, London, WC2A 1AY, from which copies may be obtained.