(12) INTERNATIONAL APPLICATION PUBLISHED UNDER THE PATENT COOPERATION TREATY (PCT)

(19) World Intellectual Property Organization
International Bureau

(43) International Publication Date
14 February 2013 (14.02.2013)

WIPO | PCT

(10) International Publication Number
WO 2013/020583 A1

(51) International Patent Classification:
F24F 5/00 (2006.01)

(21) International Application Number:
PCT/EP2011/063647

(22) International Filing Date:
8 August 2011 (08.08.2011)

(25) Filing Language: English

(26) Publication Language: English

(71) Applicant *(for all designated States except US)*: **AUTARKIS B.V.** [NL/NL]; Ondernemersweg 2, NL-7451 PK Holten (NL).

(72) Inventors; and

(75) Inventors/Applicants *(for US only)*: **SCHMITZ, Antonius, Henricus, Hubertus** [NL/NL]; Kloosterhof 56, NL-6061 CT Posterholt (NL). **GOUW, Marcel, Reijer** [NL/NL]; Grote Marktstraat 3, NL-3841 AH Harderwijk (NL).

(74) Agents: **VAN ESSEN, Peter, Augustinus** et al.; Allens & Van Essen, Agro Business Park 20, NL-6708 PW Wageningen (NL).

(81) Designated States *(unless otherwise indicated, for every kind of national protection available)*: AE, AG, AL, AM, AO, AT, AU, AZ, BA, BB, BG, BH, BR, BW, BY, BZ, CA, CH, CL, CN, CO, CR, CU, CZ, DE, DK, DM, DO, DZ, EC, EE, EG, ES, FI, GB, GD, GE, GH, GM, GT, HN, HR, HU, ID, IL, IN, IS, JP, KE, KG, KM, KN, KP, KR, KZ, LA, LC, LK, LR, LS, LT, LU, LY, MA, MD, ME, MG, MK, MN, MW, MX, MY, MZ, NA, NG, NI, NO, NZ, OM, PE, PG, PH, PL, PT, QA, RO, RS, RU, SC, SD, SE, SG, SK, SL, SM, ST, SV, SY, TH, TJ, TM, TN, TR, TT, TZ, UA, UG, US, UZ, VC, VN, ZA, ZM, ZW.

(84) Designated States *(unless otherwise indicated, for every kind of regional protection available)*: ARIPO (BW, GH, GM, KE, LR, LS, MW, MZ, NA, SD, SL, SZ, TZ, UG, ZM, ZW), Eurasian (AM, AZ, BY, KG, KZ, MD, RU, TJ, TM), European (AL, AT, BE, BG, CH, CY, CZ, DE, DK, EE, ES, FI, FR, GB, GR, HR, HU, IE, IS, IT, LT, LU, LV, MC, MK, MT, NL, NO, PL, PT, RO, RS, SE, SI, SK, SM, TR), OAPI (BF, BJ, CF, CG, CI, CM, GA, GN, GQ, GW, ML, MR, NE, SN, TD, TG).

Declarations under Rule 4.17:

— *as to the identity of the inventor (Rule 4.17(i))*

Published:

— *with international search report (Art. 21(3))*

(54) Title: CLIMATE CONTROL SYSTEM

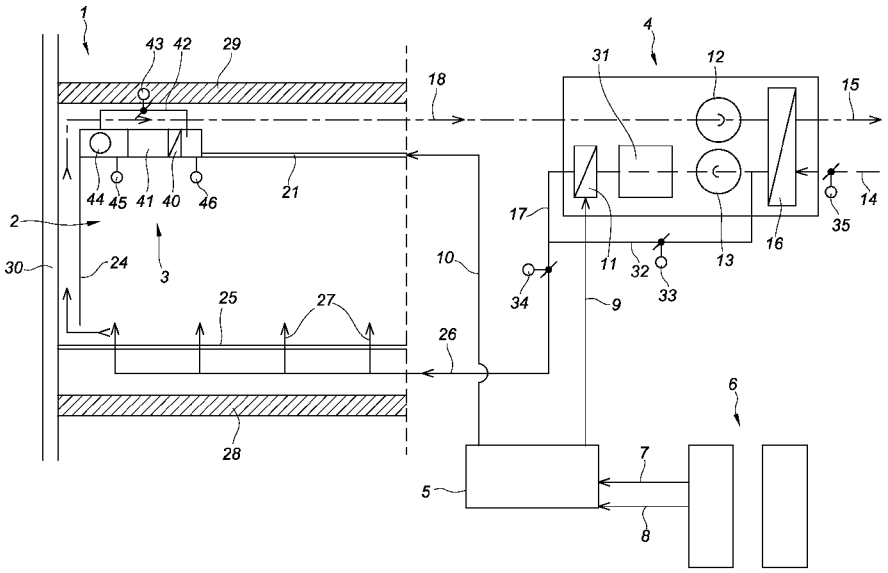

FIG. 2

(57) Abstract: The invention relates to a climate control system, comprising a PCM latent heat storage heat exchange assembly in a channel for ventilation air, an air temperature adjustment device in a channel for ventilation air, and a recirculation loop channel for circulating air, said recirculation loop channel including said PCM latent heat storage heat exchange assembly and said air temperature adjustment device.

WO 2013/020583 A1

Climate control system

TECHNICAL FIELD OF THE INVENTION

The invention relates to a climate control system.

BACKGROUND OF THE INVENTION

Climate control systems for buildings are generally known. Known HVAC installations for office building usually have a lager cooling/heating capacity installed which have a strongly discontinuous operation, usually a daytime operation and a nighttime operation. Furthermore, these systems however require a large amount of energy and thus have a high contribution to Carbon dioxide emission. Large efforts are being made to reduce the carbon dioxide emission of buildings.

An example of a current building design that seeks to reduce carbon dioxide emission, and even attempts to create a building in which the climate system does not use energy is described in "Seeking zero Energy", Roger E. Frechette, III, P.E. Leed, Russel Gilchrist, in Civil Engineering –ASCE, Vol. 79, No. 1, January 2009, pp. 38-47, states the following: "The Pearl River Tower, in Guangzhou, China, has been designed to be the most energy efficient of all the world's supertall structures. Although the design team's original goal of constructing a "net zero energy" building that would sell its excess power to the local power grid is unlikely to be achieved, the structure is expected to consume nearly 60 percent less energy than a traditional building of similar size and could serve as a model for future "carbon-neutral" towers." The climate system that seems to be used in this building will be discussed in more detail later.

Some other climate control systems use a phase change material to provide latent heat storage to reduce the energy requirement. WO2003102484A2 discloses a climate control unit located in the vicinity of the ceiling. The climate control unit comprises plate shaped latent heat accumulator bodies. The plate shaped bodies are parallel positioned at a predetermined distance with respect to each other to form an air channel between adjacent plate shaped bodies. The plate shaped bodies comprise a cavity filled with a phase change material. A phase change material (PCM) is a substance with a high latent heat of fusion. Cycles of melting and solidifying at a certain temperature enable

it to store and releasing large amounts of energy. Heat is absorbed or released when the material changes from solid to liquid and vice versa. Bodies filled with PCMs are classified as latent heat storage (LHS) units.

In most of the climate control systems using PCM material, the capacity is laid out in one of the following ways. When days are hotter than a set temperature and nights are colder that said set temperature, the outside air is used to cool down the PCM material. During daytime, air is passed the PCM material and cools a room or other part of a building. This, however, does not function when both days as well as nights are above the set temperature. This occurs, for instance, in tropical regions.

SUMMARY OF THE INVENTION

The object of the invention is to provide a climate control system which allows to realize at least one of: reduction of manufacturing costs of climate control unit, reduced energy use of the system compared with the known embodiment of a climate control systems, and/or a reduction in the required installed heating and cooling systems and their capacity, for instance in electrical HVAC systems.

According to the invention, this object is achieved by a climate control system comprising a PCM latent heat storage heat exchange assembly in a channel for ventilation air, an air temperature adjustment device in a channel for ventilation air, and a recirculation loop channel for circulating air, said recirculation loop channel including said PCM latent heat storage heat exchange assembly and said air temperature adjustment device.

The application of PCM material in combination with a recirculation of air inside the climate system in order to regenerate the installed PCM material provides a lossless or almost lossless storage of energy. This allows the installed systems for heating and/or cooling to operate in a more continuous way. This can lead to a lower installed capacity and thus a reduction in cost of the climate control system. It may also or alternatively lead to a lower overall energy consumption of the climate system and as a result on a lower overall energy consumption of the building. Furthermore, the use of PCM material, in particular when installed in buildings that have a discontinuous use, like office buildings, results in a more continuous use of installed (conventional) heating/cooling machines. Thus, the installed capacity can be reduced with up to 50 %. This may reduce

the energy usage and thus the carbon dioxide emission. It may also provide a reduction of the cost of the installation. Energy reduction may follow from this through:

-lower losses by switching off the system due to a lower overdimensioning.

-a higher efficiency of the installed air temperature adjustment devices due to higher temperature differences and use of natural temperature fluctuations;

-for instance in tropical environments, higher transmission and infiltration losses to outside the building due to lower outdoor temperatures. Thus, at night a room cools better and automatically due to the presence of PCM.

In the current invention, the PCM material is applied on the air-side of the climate control system. This reduces the installation costs of such a system. Using air reduces transfer losses as the air can be directly used in the ventilation of a building. Thus no additional transport losses apply. Because of the higher storage temperatures in an air side PCM application, a longer use of free outside air cooling can be used, thus again leading to an energy reduction. The additional air temperature adjustment device can adjust the air temperature beyond the PCM melting/solidifying temperature. And if the outside air temperature is close to the desired temperature or it is easily adaptable to a set temperature, it is even possible to use that air without heating or cooling, thus saving further energy.

In the current application, when using for instance the terms “parallel”, “rectangular”, “perpendicular”, it should be evident that small deviations from the absolute mathematical definitions can be possible. In some of the current designs, a deviation of as much as 10 % is possible. In most of the current designs a deviation of 1-5 % can be possible.

In this application, the PCM material is regenerated. Regeneration of PCM material in this context can mean melting of the PCM material. In this way, the PCM material can give off heat and solidify/crystallize again in the process of giving off heat. Regeneration can also mean solidifying of crystallizing the PCM material. In this way, the PCM material can take up heat which melts the PCM material again. In fact PCM material is double, as PCM already stands for Phase Change Material.

In this application, a latent heat storage heat exchange assembly has latent heat storage units filled with PCM, phase change material. It has in inlet allowing a fluid flow into said assembly and to contact said latent heat storage units. The fluid thus exchanges heat with the PCM material. In that way the fluid can be heated or cooled using the PCM material. In several patent applications from the applicant, latent heat storage heat

exchange units are described. In particular, the latent heat storage heat exchange devices, units and assemblies described in PCT/NL2011/050191 and NL2007209 of August 2011are referred to. These patent applications are referred to as if fully set forth in this document.

Furthermore, some embodiments of climates systems and for instance thermal ceilings are disclosed in EP1509738, EP1908809, NL1029355, EP2180108. These patent applications are referred to as if fully set forth in this document.

The air temperature adjustment device can be any general heating and/or cooling machine known in the art. In an embodiment, the air temperature adjustment device comprises a heat exchanger operationally coupled in series with the PCM heat storage heat exchange assembly. Air thus passes through the (conventional) heat exchanger as well as through the PCM heat exchanger. In the (conventional) heat exchanger, the air exchanges heat with another fluid. This fluid can originate from a buffer source of fluid, for instance a geothermal source, or from a conventional heating or cooling machine, from a solar heater, or from another source.

Alternatively, the air temperature adjustment device may also be of another nature and directly heat or cool the air. Examples are a conventional electric heater and a solar collector.

In an embodiment, said channel with said PCM latent heat storage heat exchange assembly and said channel with said air temperature adjustment device are one single channel. In an embodiment, the PCM latent heat storage heat exchange assembly and the air temperature adjustment device are arranged in series in one channel.

In an embodiment, at least part of said recirculation loop channel forms at least part of said channel with said PCM latent heat storage heat exchange assembly and/or said channel with said air temperature adjustment device.

In an embodiment, said climate control system for providing a temperature-controlled flow of air, comprising an inlet and an outlet for said air, an air displacement device, said PCM latent heat storage heat exchange assembly and said air temperature adjustment device operationally coupled in series between said inlet and said outlet, a return channel coupled in parallel over said serially coupled PCM latent heat storage heat exchange assembly and said air temperature adjustment device, and a set of valves, which valves are configured to be able in a first configuration to block at least partially said inlet and said outlet and to unblock at least partially said return channel, thus providing a

channel loop including said serially coupled PCM latent heat storage heat exchange assembly, said air temperature adjustment device and said air displacement device, said climate system configured to allow during operation in said first configuration to have a loop of circulating air for regenerating PCM material in said PCM latent heat storage heat exchange assembly, and said valves are configured to be able in a second configuration to at least partially block said return channel, said climate system further configured to allow during operation in said second configuration to provide a flow of air from said inlet through said PCM latent heat storage heat exchange assembly and said air temperature adjustment device to said outlet.

The air displacement device in general can be any air displacement device used to displace air. Such devices as such are well known in for instance air conditioning systems. For example, they can comprise all sorts and types of ventilators.

A return channel is in an embodiment coupled in parallel over said serially coupled PCM latent heat storage heat exchange assembly and said air temperature adjustment device. A channel can be provided between said inlet and said outlet, and the PCM latent heat storage heat exchange assembly and said air temperature adjustment device can be provided in said channel, or said channel passes air subsequently through said assembly and said device. Said return channel has two opposite ends. One end is in fluid communication with the channel between said inlet and upstream of said serially coupled PCM latent heat storage heat exchange assembly and said air temperature adjustment device. The opposite end is in fluid communication with said channel between said outlet and downstream of said serially coupled PCM latent heat storage heat exchange assembly and said air temperature adjustment device.

The climate control system comprises a set of valves. In one combination of positions of these valves, the air runs almost exclusively through the latent heat storage heat exchange assembly and the air temperature adjustment device. Usually, this is accomplished when blocking the return channel almost completely. In some cases, for instance if a larger flow of air is required and the required temperature adjustment is small, it may be desirable to use the return channel as a source of additional “bypass air”. The main purpose of the return channel, however, is regeneration of the PCM material. In another configuration of the valves, the inlet and outlet are at least partially blocked. Usually, for regeneration, the inlet and outlet will be completely blocked. If, however, a small amount of air is needed in the building, it may be possible to open these valves a

little to allow inflow of (fresh) air into the building. When regenerating, the return channel usually is unblocked to reduce air resistance as much as possible. The set of valves can include two switch valves at the ends of the return channel, Thus, these valves switch between (at least partially) blocking the inlet ends, and leaving the main channel that couples the inlet, outlet and serially coupled latent heat storage heat exchange assembly and air temperature adjustment device at least partially free, and a setting in which these valves (at least partially) unblock the return channel ends and (at least partially) block the inlet and outlet. In another embodiment, three controllable valves can be used. One valve in the return channel, one valve between a channel end and the inlet, and one valve positioned between the opposite channel end and the outlet. In one setting of the valves, the return channel valve at least partially blocks. This, air runs substantially through the main channel from the inlet to the outlet. In another setting the return channel together with the main channel form a loop. Air can circulate from the latent heat storage heat exchange assembly to the air temperature adjustment device and back again, allowing said air temperature adjustment device to regenerate the PCM material in the latent heat storage heat exchange assembly.

Various embodiments are disclosed in the depending claims. These embodiments may have additional advantages or solve additional problems that are mentioned in this application.

The invention further relates to a climate control system comprising:

-an inlet and an outlet for air;

- an air displacement device;

- a PCM latent heat storage heat exchange assembly and an air temperature adjustment device operationally coupled in series between said inlet and said outlet;

-a forward channel fluid coupling said inlet, said serially coupled PCM latent heat storage heat exchange assembly and air temperature adjustment device, and said outlet, allowing air to flow from said inlet through said serially coupled PCM latent heat storage heat exchange assembly and air temperature adjustment device to said outlet;

- a return channel having two opposite ends, one end in fluid communication with the channel between said inlet and upstream of said serially coupled PCM latent heat storage heat exchange assembly and said air temperature adjustment device, the opposite end in fluid communication with said channel between said outlet and downstream of said serially

coupled PCM latent heat storage heat exchange assembly and said air temperature adjustment device, and a valve for restricting said return valve.

The invention further relates to a climate control system comprising:

-an air channel loop comprising an air displacement device, said air channel loop having first loop part and a second loop part;

- a PCM latent heat storage heat exchange assembly and an air temperature adjustment device operationally coupled in series in said first loop part;

- an air inlet in said channel loop upstream of said serially coupled PCM latent heat storage heat exchange assembly and air temperature adjustment device .

- an air outlet in said channel loop downstream of said serially coupled PCM latent heat storage heat exchange assembly and air temperature adjustment device,

wherein said channel loop comprises channel adjustment means for adjusting the channel between mainly circulating air in said channel loop, and restricting the flow of air through said second loop.

The invention further relates to a climate control system, comprising:

a heat exchanger in fluid communication with a source of fluid and

a PCM latent heat storage heat exchange assembly, in fluid communication with said heat exchanger in a second air loop allowing said climate control system to selectively switch between:

- a first operational mode allowing said air to pass through said PCM latent heat storage heat exchanger and said heat exchanger in order to bring said air to a set temperature and exit said climate control system, and

- a second operational mode allowing said air to pass back and forth between said PCM latent heat storage heat exchanger and said heat exchanger in order to regenerate PCM material in said PCM latent heat storage heat exchanger.

The invention further relates to a climate control system for providing a temperature-controlled flow of air, said climate system comprising:

-an inlet and an outlet for said air;

- an air displacement device;

- a PCM latent heat storage heat exchange assembly and an air temperature adjustment device operationally coupled in series between said inlet and said outlet;

- a return channel coupled in parallel over said serially coupled PCM latent heat storage heat exchange assembly and said air temperature adjustment device, and

- a set of valves, which valves are configured to be able in a first configuration to block at least partially said inlet and said outlet and to unblock said return channel, thus providing a channel loop including said serially coupled PCM latent heat storage heat exchange assembly, said air temperature adjustment device and said air displacement device, said climate system configured to allow during operation in said first configuration to have a loop of circulating air for regenerating PCM material in said PCM latent heat storage heat exchange assembly, and said valves are configured to be able in a second configuration to at least partially block said return channel, said climate system further configured to allow during operation in said second configuration to provide a flow of air from said inlet through said PCM latent heat storage heat exchange assembly and said air temperature adjustment device to said outlet.

The invention in all its aspects thus provide embodiments of a climate system in which when in operation in a first configuration comprises a loop of circulating air that enables said air temperature adjustment device to regenerate said PCM latent heat storage heat exchange assembly, and in operation in a second configuration said air temperature adjustment device together with said PCM latent heat storage heat exchange assembly adjust the temperature of incoming air to a set temperature value.

It will be evident that the various aspects mentioned in this patent application may be combined and may each be considered separately for a divisional patent application. Other features and advantages of the invention will become apparent from the following detailed description, taken in conjunction with the accompanying drawings that illustrate, by way of example, various features of preferred embodiments of the invention.

BRIEF DESCRIPTION OF THE FIGURES

These and other aspects, properties and advantages of the invention will be explained hereinafter based on embodiments shown in the following description with reference to the drawings, wherein like reference numerals denote like or comparable parts, and illustrating in:

Figure 1 a schematic drawing of a climate system of the state of the art;

Figure 2 a schematic drawing of a climate system using PCM assemblies and units;

Figure 3 the climate system of figure 2 running in a tropical region during daytime;

Figure 4 the climate system of figure 2 running in the tropical region during nighttime;

Figure 5 a climate system as an external system;

Figure 6 a climate system installed inside a room or part of a building.

The drawings are not necessarily on scale.

DESCRIPTION OF EMBODIMENTS

In figure 1, a schematic drawing is made of a climate system that may be ofr instance be used in the Pearl River Tower, in Guangzhou, China. This schematic drawing is based upon the description in the article of Frechette et al. referred to above. The climate system used in this building may have the following layout. Please note that the schematic drawing and description are a generalized interpretation, and in some instances alternatives for the devices used in the actual building are presented.

The building 1 has rooms 2. The rooms are provided with several installations for climate control. The rooms 2 are partly temperature controlled using an air conditioning system 4. Furthermore, the rooms 2 are provided with further temperature control provisions 21 and 22 (discussed below) that use a temperature controlled liquid, usually water, to further control the temperature in each room. In the climatological region of the building, the former usually implies providing additional cooling. Both of these provisional use a source a cooling machine 5. In the Pearl Tower, a cooling machine 5 is used, but other sources may alternatively be used, like a geothermal source. In the Pearl tower, in was devised that the cooling machine 5 was to receive its electrical energy 7 from a set of micro turbines 6. The cooling machine 5 further used the heat 8 from these micro turbines 6 in cogeneration or heat-power coupling. The micro turbines 6 were further intended to deliver power 20 to the grid when the cooling machine 5 needs no or limited power. In that way, it was expected that the use of the micro turbines 6 could be optimized. In the actual design the micro turbines 5 were not used because coupling to the grid was not allowed.

The cooling machine 5 provides cooled water via conduits 10 to the further temperature control provisions, and via conduits 17 to the air conditioning system 4. The

further temperature control provisions will be discussed first, and afterwards the air conditioning system 4.

The rooms 2 of the building and with floor 28 and ceiling 29 are provided with a raised floor 25 from which cooled ventilation air 27 from the air conditioning system is released in the air as displacement ventilation. The maximum amount of ventilation air limits the cooling property of this part of the climate system. However, other configurations may be possible.

Furthermore, the rooms 2 use cooled liquid from the cooling machine 5 (conduits 10) to provide additional cooling. To that end, a lowered ceiling with a so-called "chilled radiant ceiling" 21 with a "perimeter chilled beam system" 22 may be used. However, other configurations may be possible.

Finally, the building is to be equipped with an internally ventilated, high performance active double wall with mechanized blinds 30 on the northern and southern facades. Heated air from this system is directed to the air conditioning system 4 and used as an energy source for a dehumidifier 16.

The air conditioning system 4 has a housing 19 with an inlet 14 for outside air and an outlet 15 for used exhaust air. In a tropical environment, usually both flows of air have a temperature above the set temperature of the room 2. In the tropical environment, usually the air is first dehumidified in a dehumidifier. In this embodiment, the exhaust air, which is in fact heated in the double wall façade 30, provides at least part of the energy needed for the dehumidifier. In particular, an evaporative cooler 16 with desiccant wheels 12, 13 are used. The dried air of usually 30-35 °C is cooled to 19-21 °C using heat exchanger 11.

The climate system laid out in figure 1 still requires a large amount of energy. In the Pearl tower, 50 micro turbines generating 3 MW were planned.

In figure 2 a complete climate control system using both an air conditioning system as well as temperature control using one or more liquid cooling/heating systems is presented. For simplicity of the discussion, many of the installed systems and devices are the same as in figure 1. They have the same reference numbers. Again, building 1 has rooms 2 and an air conditioning system 4. In this climate control system, PCM latent heat storage is applied in such a way that even in tropical climates the installed cooling capacity can be reduced with 50% or more. Keep in mind that in tropical regions, often the PCM material cannot be regenerated using outside air.

In this embodiment, the capacity of latent heat storage material that is installed should be sufficient to provide a maximum of about 50% of the cooling/heating capacity during use hours. During use hours, the other part of the required heating/cooling capacity is provided by heating/cooling machine 5. During off-use hours, the full capacity of the heating/cooling machine 5 can be used for regenerating the latent heat storage material. Thus, the heating/cooling machine 5 can be full time operational and its capacity can be reduced with about 50%. When using micro turbines, for instance, it is no longer required that they are able to give power to the grid. Thus, about have of the required micro turbine capacity would be needed.

The climate system of figure 2 has an air conditioning system 4 that in addition to the air conditioning system of figure 1 has a PCM latent heat storage heat exchange assembly 31 installed. This PCM assembly can be of a well-known type using for instance plates filled wit PCM material. In an embodiment, a PCM assembly is used that is described in NL2007209, filed on 1 August 2011, of the current applicant. This document is in this text incorporated by reference as if fully set forth. It describes a latent heat storage heat exchanger assembly comprising a support frame providing mutually parallel upper and lower support surfaces, and a frame unit for holding a latent heat storage heat exchange device between said support surfaces, said frame unit mounted at an angle with respect to the lower support surface, each latent heat storage device comprises a plurality of plate shaped elements at predetermined mutual distances of each other and the plate shaped elements provided perpendicular to the support surfaces. In particular the embodiment of figure 18 is very useful. This PCM assembly has a low pressure drop while on the other hand exchanging heat very efficiently. Alternatively, another setup or configuration using PCM latent heat storage hear exchange units like in PCT/NL2011/050191 can be used. Figure 1 shows such a unit as an injection moulded container holding the PCM material. It has a latent heat storage heat exchanger for use in a climate control system, the latent heat storage heat exchanger comprises a plurality of plate shaped elements, wherein the plate shaped elements are parallel positioned at a predetermined distance with respect to each other to form a fluid channel between adjacent plate shaped elements and each element comprises a cavity filled with a phase change material, and the latent heat storage heat exchanger comprises a coupling structure configured to coupled the cavities of the plurality of plate shaped elements to form one coupled cavity filled with phase change material.

The air conditioning system 4 further comprises a return conduit or channel 32 that can be used to allow air to flow back between the PCM assembly 31 and the heat exchanger 11. In that way, PCM material in the PCM assembly can be regenerated. In a tropical climate, that usually means that the PCM material is cooled.

In order to allow the air conditioning system 4 of figure 2 to switch between a mode of operation in which the combination of the PCM assembly 31 and the heat exchanger together bring the temperature of incoming air to a set temperature and a another mode of operation in which using the heat exchanger 11 the PCM assembly is regenerated, several valves 33, 34 and 35 are installed. In an embodiment, these valves are controllable valves that are operationally coupled to a control system of the climate control system. When valves 34 and 35 are fully opened and valve 33 is open, channel 32 and 17 will form a loop that allows air to flow from the heat exchanger 11 to the PCM assembly and back again. In the mean time, the heat exchanger will receive temperature-controlled fluid via conduit 9 from the heating/cooling machine 5. One or more of the valves 33, 34 and 35 can of course also be partially opened in order to allow some conditioned air to enter the building if needed. The air conditioning system 4 can have additional air displacement units installed in order to pass the air through the PCM assembly 31 and the heat exchanger 11. In an alternative regeneration mode when the air temperature o the outside air is sufficiently below the regeneration temperature of the PCM material, valve 35 can be opened end the outside air can be used to regenerate the PCM assembly, thus reducing the energy use even further.

In the embodiment of figure 2, the PCM assembly is positioned upstream of the heat exchanger 11. In a tropical environment, for instance where the Pearl Tower building is located, the day temperature can be between 30 and 40 °C and the air is humid, more than 70% (relative humidity). In these conditions, using the evaporative cooler 16 with desiccant wheels 12, 13 the air is first dried. Using the PCM assembly, that air is subsequently cooled to 23-28°C. In an embodiment, the air is cooled to between 24 - 26°C. To that end, the PCM material in the PCM assembly is selected to have as a melting temperature that selected temperature. Subsequently, using heat exchanger 11 that air is further cooled to a set temperature of for instance 16-25 °C. In an embodiment, the air leaves the air conditioning system at a temperature of 19-21 °C. In these situations, the PCM capacity should be up to 50 % of the required capacity of the air conditioning system 4 during daytime or working hours of people using the building. Thus, the use of the PCM

assembly allows a reduction of the capacity of the heating/cooling machine with up to 50%.

The temperature conditioning system 3 inside the room 2 of figure 2 uses the same inventive principle and also has a (usually smaller) PCM assembly 41 installed. It is evident that this temperature conditioning system 3 may also be a full climate control system that also controls humidity, and for instance filters the air. Usually, this local system can be coupled an overall control system that also controls the air conditioning system. Alternatively, system can be laid out in such a way that the overall control system provides a basic room temperature of for instance 19-24°C. Each room or set of rooms can have its local control system that allows the room temperature to be set locally as required.

The ceiling 21 in room 2 in this embodiment is still installed, but may also be left out. The room 2 has a local climate control subsystem 3 that has the PCM assembly, a heat exchanger 40 that is in fluid communication with the heating/cooling machine 5. The local system 3 of room 2 may further have an air displacement device 44. This usually is a ventilator. The local subsystem system has a channel allowing air from the room to enter the system, pass the air displacement device 44, the PCM assembly, the heat exchanger 40, an exit the system again into the room. Such a system is for instance in general disclosed in EP1509738 and in NL1029355 . These publications are incorporated by reference as if fully set forth in this publication. Additionally, the local system has a channel 42 that allows air to circulate from the heat exchanger back to the air displacement device 44. Additionally, the local system has valves 43, 44 and 45. Valves 44 and 45 allow closing off the air intake and air exit of the local system. When additionally opening valve 43, channel 42 becomes a return channel and a loop is now created that allows air to flow back and forth between the PCM assembly 41 and the heat exchanger 40 in order to regenerate the PCM assembly. In an embodiment installed in a tropical region, in the local system PCM material is installed that has a melting temperature of 16-25 °C, in an embodiment 19-21 °C. The heat exchanger can than be provided downstream of the PCM assembly in order to cool the air coming from the PCM assembly further.

In figure 3 the operation of the combined air conditioning system 4 and the local conditioning system of figure 2 is illustrated in daytime operation and in figure 4 in nighttime operation, in a tropical environment. The daytime temperature usually is 30-40°C during 12 hours, and the nighttime temperature is 20-30°C during 12 hours. In this drawing figure 3, the heating/cooling machine 5 is a cooling machine, the PCM assemblies

31 and 41 are cooling, i.e., the PCM material is slowly melting. In figure 3, the cooling machine 5 can be running on full capacity and the power sources 6 also can be running in full load. In figure 3, valves 33 and 43 are closed. The PCM assemblies 31 and 41 together with respective heat exchangers 11 and 40 cool the warm incoming air. Valves 34, 35 and 45 and 46 are open. In room 2, warm air enters the local system at inlet 47 and cooled air exits in flow 48. The inlet 47 and outlet 48 can be positioned at other position.

In figure 4, the nighttime operation mode in a tropical region is shown. The PCM material in the PCM assemblies 31 and 41 is now melted and needs to be regenerated. Cooling machine 5 keeps on running like daytime, but the cooling demand is much lower or almost zero. Valves 33 and 43 are now opened and a loop is created. Cooled air from the heat exchangers 11 and 40 is now passed through the PCM assemblies 31 and 41 and cooled again in order to regenerate (freeze) the PCM material. Valves 34, 35 and 47, 48 are now at least partially closed. The air conditioning system 4 now passes very little to no air to the rooms 2. In this embodiment, the cooled fluid from conduit 10 is not passed through the cooling ceiling 21 any more, but bypasses the cooling ceiling 21 and is now directly passed to the heat exchanger 40.

In figure 2, an air conditioning system 4 is combined with a local system. The local system can also be called a climate control system as it at least controls the temperature at least partly. Other features like a filter and humidity control can also be implemented in this local climate system.

In figure 5, the air conditioning system 4 of figure 2 is now depicted as a separate system that in fact is an embodiment of the climate system of the current invention. The same reference numbers have at least the same function as in figure 2. Such a climate control system can be a stand-alone unit placed outside a building, even in a transportable unit. Alternatively, the components can be integrated into a building. In this air conditioning system 4, the required installed heating/cooling machine can be halve of the usual size even if the outside temperature does not drop below the set operational temperature that needs to be maintained for instance during working hours. Thus, at least 50 % can be saved in these situations. These situations for instance also occur when an installed climate system needs to be replaced. The climate situations for instance occur in tropical regions. These climate situations may also occur in cold regions.

In figure 5, a control system 50 is further shown that operates the air conditioning system 4 and that can be part of such a system. Usually, as already explained

above, such a control system may comprise a computer running control software. The control system is operationally coupled to air displacement device 60 and to fluid displacement device 61. Furthermore, several sensors 62-65 can be operationally coupled to such a control system 50. Sensor 62 can be one or more sensors for measuring temperature, flow and/or humidity. Sensor 63 can be one or more sensors for measuring flow and/or temperature. Sensor 64 can be one or more sensors for measuring flow, temperature and/or humidity, Sensor 65 can be one or more sensors for measuring flow, temperature, humidity, and carbon dioxide levels. The operation and modes of operation for regenerating PCM material of control system 50 in air conditioning system 4 are also described above. In figure 5, the arrows towards control system 50 indicate information going to the control system, and arrows from the control system are control signals to for instance displacement devices, and controllable valves.

Figure 6 separately shows a local climate system having the elements of figure 2. This particular embodiment shows a climate system that takes air from a room and brings it to a desired temperature in order to control the temperature in the room. The room 2 can for instance be ventilated using natural ventilation.

The system of figure 2 can provided with one single centralised control system that is operationally coupled to the valves in order to open and closed them at least partially in order to switch between modes of operation. The control system further is operationally coupled to air displacement devices that pass air though the heat exchangers and through the PCM assemblies. Furthermore, the control system can be operationally coupled to a displacement device that provides fluid from the cooling/heating machine 5. By controlling the displacement devices, the amount of cooling and/or heating of the flows of air and of the ceiling 21 can be controlled. Furthermore, the rate of regeneration can thus be controlled. The control system can also be operationally coupled to various temperature sensors to check the local temperatures and check the operation of the climate control system. For instance the temperature of the outside air entering the air conditioning system 4 can be determined. Furthermore, its humidity can be determined using a humidity sensor operationally coupled to the control system.

The control system often is a computer system running software which, when running on said computer system, performs the operational or method steps described. In particular, the steps of switching and controlling the modes of operation discussed above can be controlled in that way.

Usually, the invention is used for flows of air passing the PCM material. However, it may also be used for flows of other fluids. For instance, other gases of mixtures of gases, but also for liquids, for instance water. Usually, the cooling or heating fluid running from the heating/cooling machine is a liquid, often water.

The measures described hereinbefore for embodying the invention can obviously be carried out separately or in parallel or in a different combination or, if appropriate, can be supplemented with further measures; it will in this case be desirable for the implementation to depend on the field of application of the device. The invention is not limited to the illustrated embodiments. Changes can be made without departing from the idea of the invention.

CLAIMS:

1. A climate control system, comprising:
- a PCM latent heat storage heat exchange assembly in a channel for ventilation air;
- an air temperature adjustment device in a channel for ventilation air, and
- a recirculation loop channel for circulating air, said recirculation loop channel including said PCM latent heat storage heat exchange assembly and said air temperature adjustment device.

2. The climate control system of claim 1, wherein said channel with said PCM latent heat storage heat exchange assembly and said channel with said air temperature adjustment device are one single channel.

3. The climate control system of claim 1 or 2, wherein at least part of said recirculation loop channel forms at least part of said channel with said PCM latent heat storage heat exchange assembly and/or said channel with said air temperature adjustment device.

4. The climate control system of any one of the preceding claims for providing a temperature-controlled flow of ventilation air via said ventilation channel, said climate system comprising:
-an inlet and an outlet for said ventilation air channel;
- an air displacement device;
- said PCM latent heat storage heat exchange assembly and said air temperature adjustment device operationally coupled in series between said inlet and said outlet;
- a return channel coupled in parallel over said serially coupled PCM latent heat storage heat exchange assembly and said air temperature adjustment device, and
- a set of valves, which valves are configured to be able in a first configuration to block at least partially said inlet and said outlet and to unblock said return channel, thus providing said recirculation loop channel including said serially coupled PCM latent heat storage heat exchange assembly, said air temperature adjustment device and said air displacement device, said climate system configured to allow during operation in said first configuration to have said loop of circulating air for regenerating PCM material in said PCM latent heat storage heat exchange assembly, and said valves are configured to be able in a second

configuration to at least partially block said return channel, said climate system further configured to allow during operation in said second configuration to provide a flow of air from said inlet through said PCM latent heat storage heat exchange assembly and said air temperature adjustment device to said outlet.

5. The climate control system of any one of the preceding claims, wherein said air temperature adjustment device comprises a heat exchanger, in fluid communication with a fluid for exchanging heat with said air.

6. The climate control system of any one of the preceding claims, wherein said inlet is positioned for the intake of outside air from outside a building and outlet for providing said air into said building,

7. The climate control system of any one of the preceding claims, wherein said inlet is positioned for the intake of air from inside a building and outlet for providing said air into said building.

8. The climate control system of any one of the preceding claims, installed inside or adjacent a room, rooms or part of a building, said inlet inside said room for air from said room and said outlet located inside said room.

9. The climate control system of any one of the preceding claims, installed outside a room, rooms or part of a building, having said inlet positioned for the inlet of air from outside said building and providing ventilation air to said room or rooms or part of said building via said outlet.

10. A climate control system for a building, comprising the climate system of claim 9 as a global climate subsystem and the climate system of claim 8 as a local climate subsystem, both air temperature adjustment devices of said global and said local climate subsystems each comprising a heat exchanger in fluid coupling with a same source of fluid.

11. The climate control system according to any one or the preceding claims wherein said air temperature adjustment device is coupled to a fluid heating and/or cooling machine.

12. The climate control system of any one of the preceding claims when depending on claim 2, wherein said air temperature adjustment device comprises a fluid displacement device for controlling heat transfer in said heat exchanger

13. The climate control system of any one of the preceding claims, wherein said set of valves comprises a first controllable valve in said return channel.

14. The climate control system of any one of the preceding claims, wherein said set of valves comprises a second controllable valve in said inlet.

15. The climate control system of any one of the preceding claims, wherein said set of valves comprises a third controllable valve in said outlet.

16. The climate control system of any one of the preceding claims, wherein said air displacement device is positioned in said return channel.

17. The climate control system of any one of the preceding claims, further comprising a control system that is operationally coupled to said set of valves and to said air displacement device for operating said valves between said first configuration and said second configuration.

18. The climate control system of the preceding claims, wherein said control system further comprises a set temperature, and a temperature sensor for determining the temperature of air flowing out of said outlet.

19. The climate control system of any one of the preceding claims, wherein said second fluid is a liquid, preferably water.

20. A method for conditioning at least the temperature in a building, comprising providing an air temperature adjustment device and a PCM latent heat storage heat exchange assembly in fluid communication with one another, wherein
in a first operational mode of said climate system said air is circulated between said PCM

latent heat storage heat exchanger and said heat exchanger in order to regenerate PCM material in said PCM latent heat storage heat exchanger, and
in a second operational mode of said climate system said air is passed through said PCM latent heat storage heat exchanger and through said heat exchanger in order to bring said air to a set temperature.

21 The method of claim 20, wherein said air temperature adjustment comprised a heat exchanger, said method further comprises bringing said heat exchanger in fluid communication with a source of temperature controllable fluid.

22. The method of claim 20, wherein said air is first passed through said PCM latent heat storage heat exchange assembly and subsequently through said air temperature adjustment device.

23. A computer program product which, when running on a computer of a control system in a climate control system of any one of the preceding claims 1-19, allows said computer to perform the steps of any one of the claims 20-22.

24. Use of said climate control system of any one of the claims 1- in conditioning the climate inside a building.

-o-o-o-o-o-

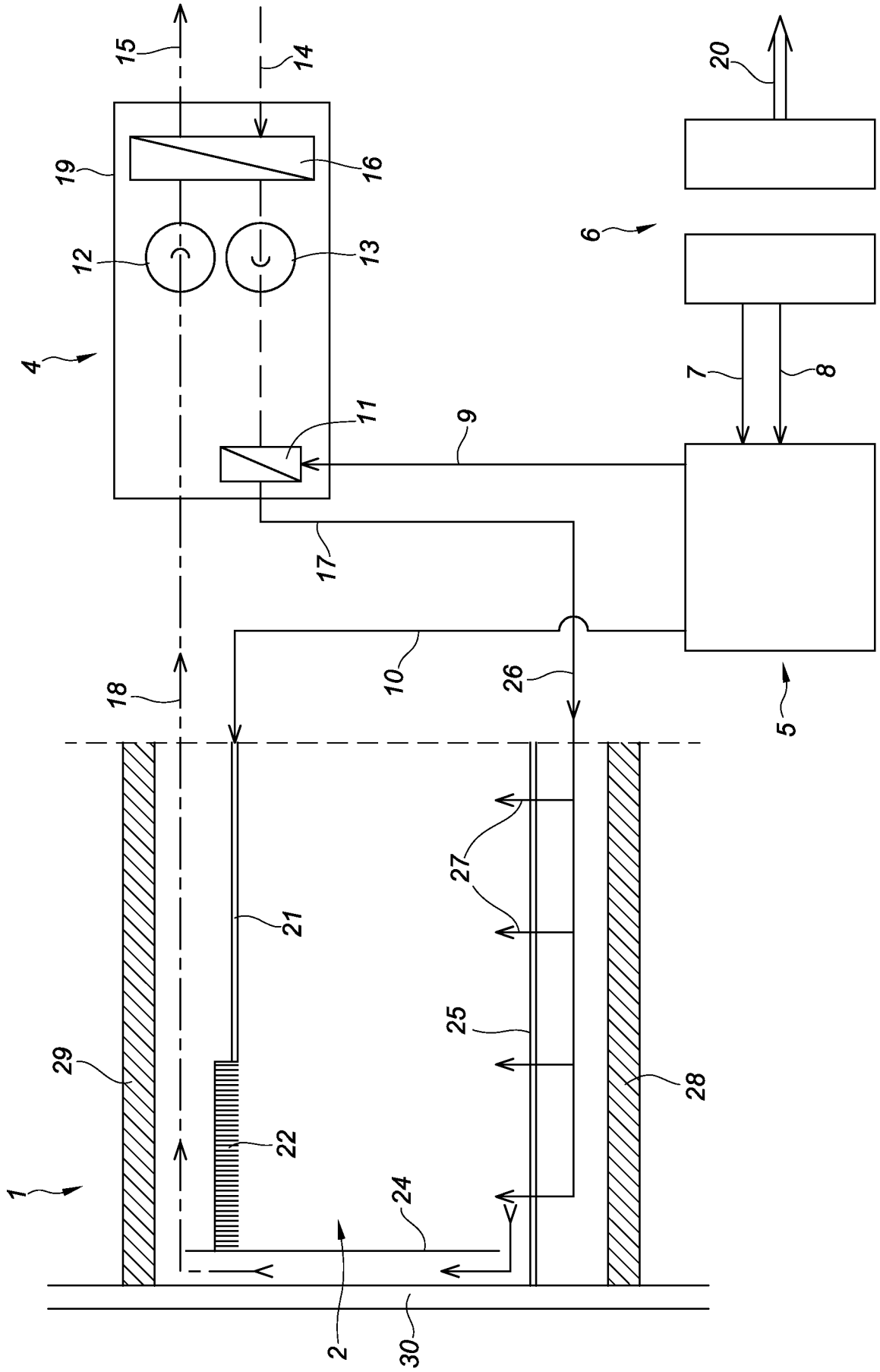

FIG. 1

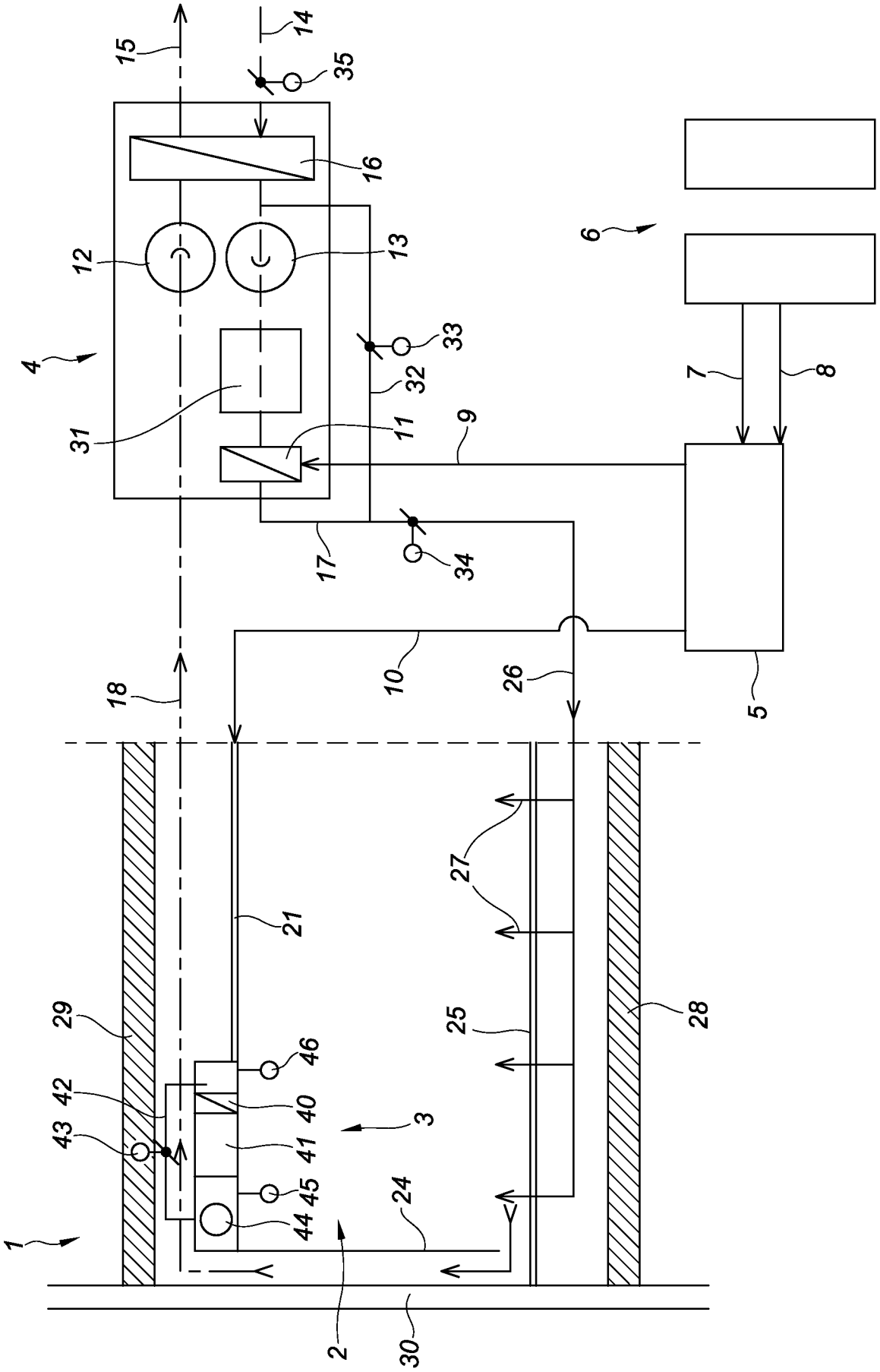
1
2
3
4
5
6
7
8
9
10
11
12
13
14
15
16
17
18
21
24
25
26
27
28
29
30
31
32
33
34
35
40
41
42
43
44
45
46

FIG. 2

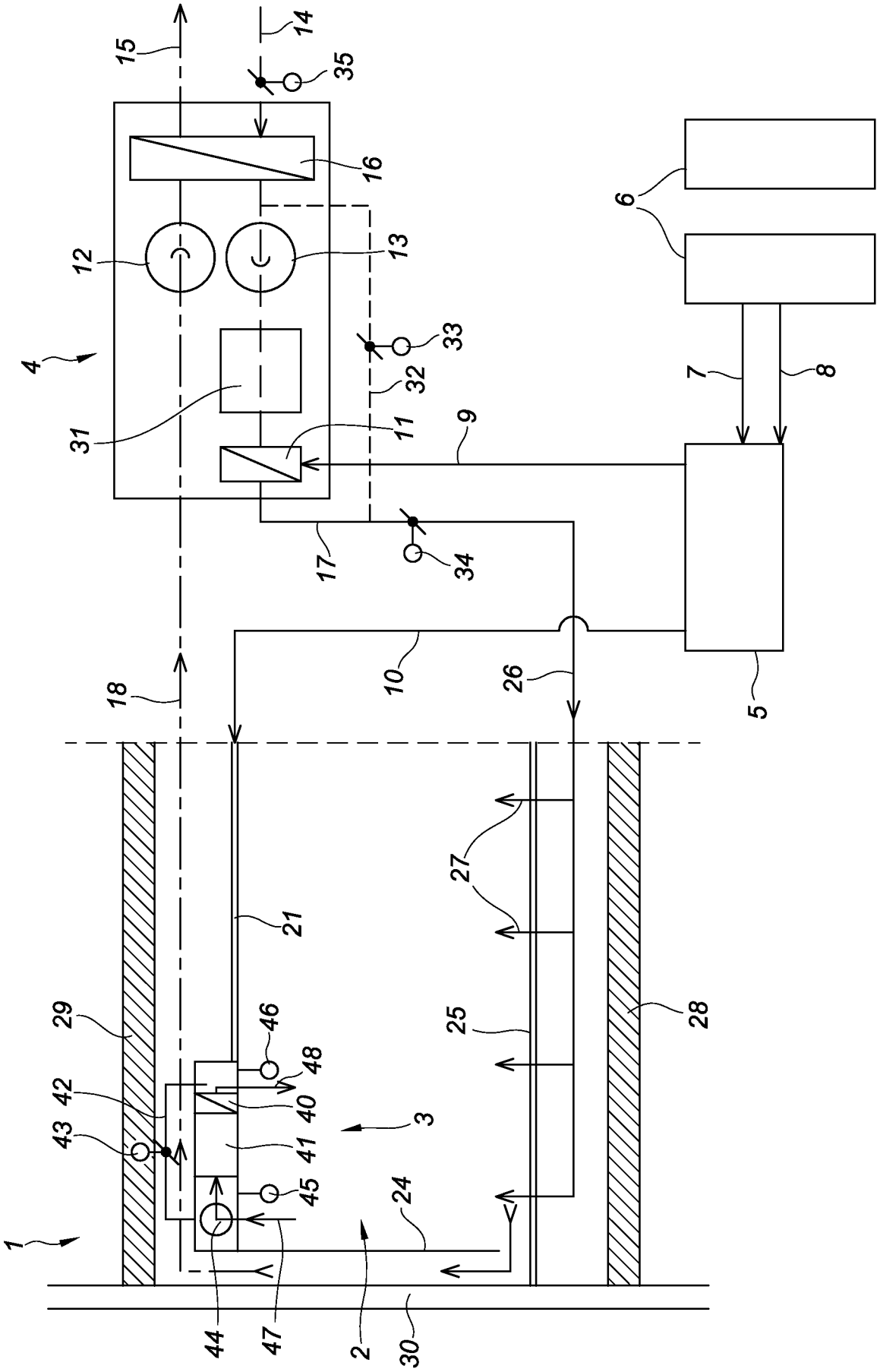
1
2
3
4
5
6
7
8
9
10
11
12
13
14
15
16
17
18
21
24
25
26
27
28
29
30
31
32
33
34
35
40
41
42
43
44
45
46
47
48

FIG. 3

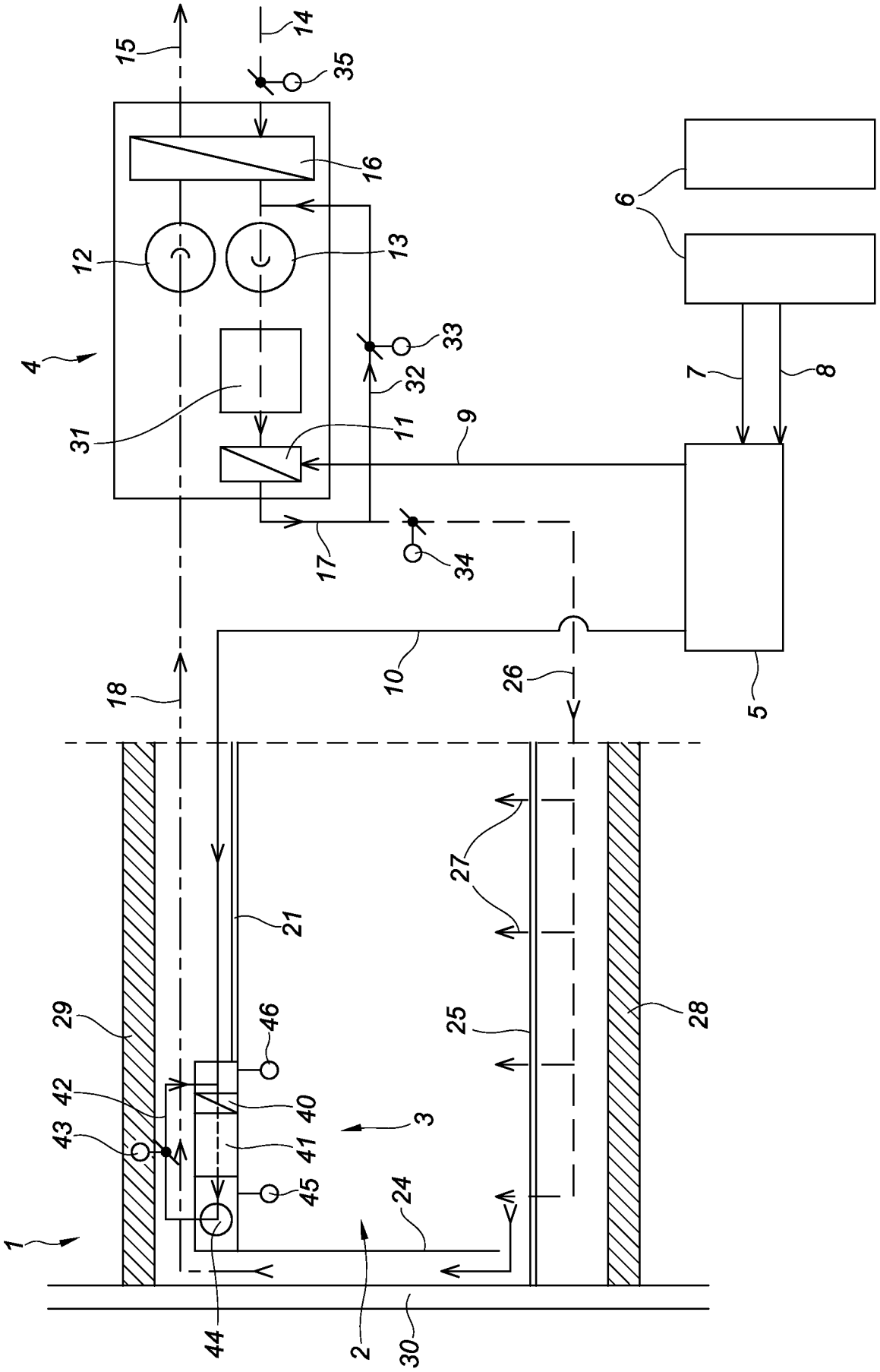
15
14
35
16
6
12
13
4
33
32
7
8
31
11
9
17
34
10
26
18
5
27
21
29
46
25
28
42
40
43
41
3
45
24
1
44
2
30

FIG. 4

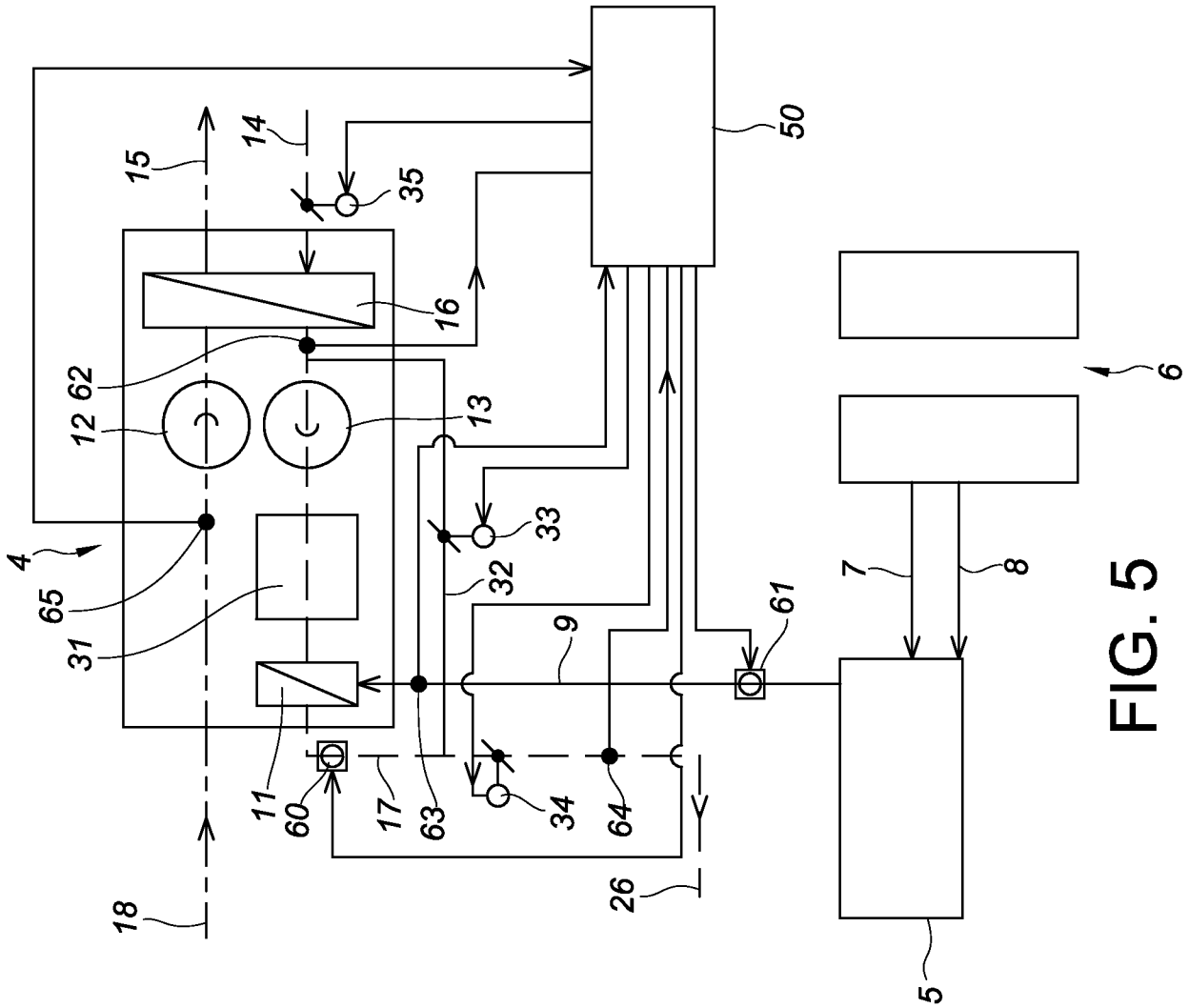

FIG. 5

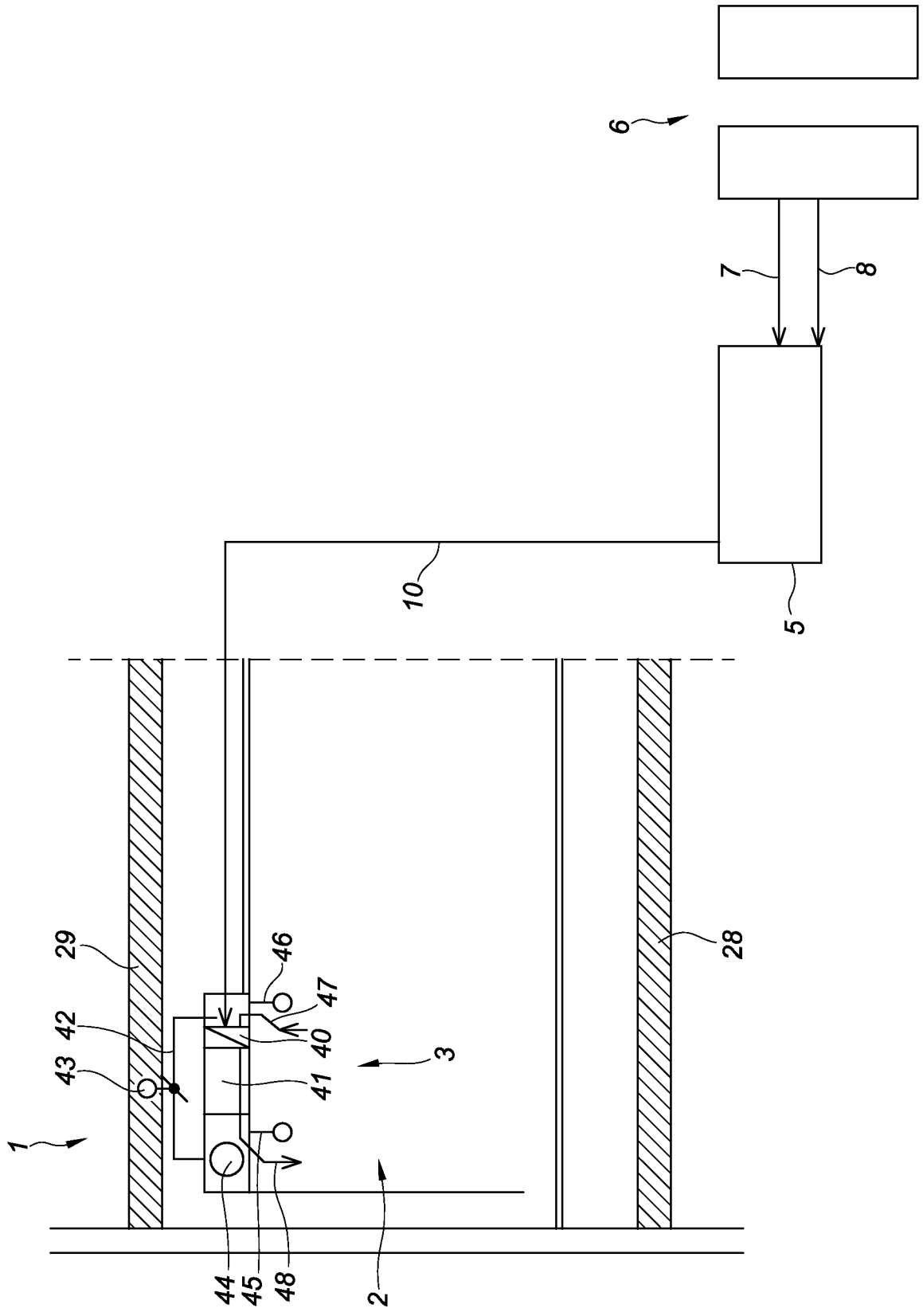

FIG. 6

INTERNATIONAL SEARCH REPORT

International application No
PCT/EP2011/063647

A. CLASSIFICATION OF SUBJECT MATTER
INV. F24F5/00
ADD.

According to International Patent Classification (IPC) or to both national classification and IPC

B. FIELDS SEARCHED

Minimum documentation searched (classification system followed by classification symbols)
F24F

Documentation searched other than minimum documentation to the extent that such documents are included in the fields searched

Electronic data base consulted during the international search (name of data base and, where practical, search terms used)
EPO-Internal, WPI Data

C. DOCUMENTS CONSIDERED TO BE RELEVANT

Category*	Citation of document, with indication, where appropriate, of the relevant passages	Relevant to claim No.
X	EP 1 455 156 A2 (IMTECH DEUTSCHLAND GMBH & CO K [DE]) 8 September 2004 (2004-09-08) paragraph [0019] - paragraph [0028] figures 1-3	1-24
A	WO 03/102484 A2 (RUBITHERM GMBH [DE]; ARCADIS BOUW EN VASTGOED VESTI [NL]; FIEBACK KLAU) 11 December 2003 (2003-12-11) cited in the application page 22, line 11 - page 35, line 16 figures	1
A	EP 1 908 809 A1 (SCHMITZ HARRY [NL]) 9 April 2008 (2008-04-09) cited in the application paragraph [0006] - paragraph [0017] figures	1

-/--

[X] Further documents are listed in the continuation of Box C.

[X] See patent family annex.

* Special categories of cited documents :

"A" document defining the general state of the art which is not considered to be of particular relevance

"E" earlier document but published on or after the international filing date

"L" document which may throw doubts on priority claim(s) or which is cited to establish the publication date of another citation or other special reason (as specified)

"O" document referring to an oral disclosure, use, exhibition or other means

"P" document published prior to the international filing date but later than the priority date claimed

"T" later document published after the international filing date or priority date and not in conflict with the application but cited to understand the principle or theory underlying the invention

"X" document of particular relevance; the claimed invention cannot be considered novel or cannot be considered to involve an inventive step when the document is taken alone

"Y" document of particular relevance; the claimed invention cannot be considered to involve an inventive step when the document is combined with one or more other such documents, such combination being obvious to a person skilled in the art.

"&" document member of the same patent family

Date of the actual completion of the international search	Date of mailing of the international search report
26 April 2012	07/05/2012

Name and mailing address of the ISA/	Authorized officer
European Patent Office, P.B. 5818 Patentlaan 2 NL - 2280 HV Rijswijk Tel. (+31-70) 340-2040, Fax: (+31-70) 340-3016	Mattias Grenbäck

Form PCT/ISA/210 (second sheet) (April 2005)

INTERNATIONAL SEARCH REPORT

International application No
PCT/EP2011/063647

C(Continuation). DOCUMENTS CONSIDERED TO BE RELEVANT

Category*	Citation of document, with indication, where appropriate, of the relevant passages	Relevant to claim No.
A	NL 1 029 355 C2 (SCHMITZ HARRY [NL]) 2 January 2007 (2007-01-02) cited in the application abstract; figures -----	1
A	EP 2 180 108 A1 (AUTARKIS B V [NL]) 28 April 2010 (2010-04-28) cited in the application abstract; figures -----	1

INTERNATIONAL SEARCH REPORT

Information on patent family members

International application No
PCT/EP2011/063647

Patent document cited in search report	Publication date	Patent family member(s)	Publication date
EP 1455156 A2	08-09-2004	AT 382837 T	15-01-2008
		EP 1455156 A2	08-09-2004
		ES 2298636 T3	16-05-2008
WO 03102484 A2	11-12-2003	AU 2003242612 A1	19-12-2003
		CA 2488276 A1	11-12-2003
		EP 1509738 A2	02-03-2005
		WO 03102484 A2	11-12-2003
EP 1908809 A1	09-04-2008	EP 1908809 A1	09-04-2008
		NL 2000253 C2	04-04-2008
NL 1029355 C2	02-01-2007	DE 102006029597 A1	25-01-2007
		NL 1029355 C2	02-01-2007
EP 2180108 A1	28-04-2010	NONE	