(12) INTERNATIONAL APPLICATION PUBLISHED UNDER THE PATENT COOPERATION TREATY (PCT)

(19) World Intellectual Property Organization
International Bureau

(43) International Publication Date
8 April 2010 (08.04.2010)

PCT

(10) International Publication Number
WO 2010/037449 A1

(51) International Patent Classification:
F15B 15/14 (2006.01) *F03D 7/02* (2006.01)

(21) International Application Number:
PCT/EP2009/005999

(22) International Filing Date:
19 August 2009 (19.08.2009)

(25) Filing Language: English

(26) Publication Language: English

(30) Priority Data:
0817784.2 30 September 2008 (30.09.2008) GB

(71) Applicant *(for all designated States except US)*: **ROLLS-ROYCE PLC** [GB/GB]; 65 Buckingham Gate, London SW1E 6AT (GB).

(72) Inventor; and

(75) Inventor/Applicant *(for US only)*: **HODGKINSON, Philip, David** [GB/GB]; c/o Rolls-Royce Plc, P.O. Box 31, Derby, DE24 8BJ (GB).

(74) Agent: **WHITE, Kevin, Andrew**; Rolls-Royce Plc, P.O. Box 31, Derby DE24 8BJ (GB).

(81) Designated States *(unless otherwise indicated, for every kind of national protection available)*: AE, AG, AL, AM, AO, AT, AU, AZ, BA, BB, BG, BH, BR, BW, BY, BZ, CA, CH, CL, CN, CO, CR, CU, CZ, DE, DK, DM, DO, DZ, EC, EE, EG, ES, FI, GB, GD, GE, GH, GM, GT, HN, HR, HU, ID, IL, IN, IS, JP, KE, KG, KM, KN, KP, KR, KZ, LA, LC, LK, LR, LS, LT, LU, LY, MA, MD, ME, MG, MK, MN, MW, MX, MY, MZ, NA, NG, NI, NO, NZ, OM, PE, PG, PH, PL, PT, RO, RS, RU, SC, SD, SE, SG, SK, SL, SM, ST, SV, SY, TJ, TM, TN, TR, TT, TZ, UA, UG, US, UZ, VC, VN, ZA, ZM, ZW.

(84) Designated States *(unless otherwise indicated, for every kind of regional protection available)*: ARIPO (BW, GH, GM, KE, LS, MW, MZ, NA, SD, SL, SZ, TZ, UG, ZM, ZW), Eurasian (AM, AZ, BY, KG, KZ, MD, RU, TJ, TM), European (AT, BE, BG, CH, CY, CZ, DE, DK, EE, ES, FI, FR, GB, GR, HR, HU, IE, IS, IT, LT, LU, LV, MC, MK, MT, NL, NO, PL, PT, RO, SE, SI, SK, SM, TR), OAPI (BF, BJ, CF, CG, CI, CM, GA, GN, GQ, GW, ML, MR, NE, SN, TD, TG).

Declarations under Rule 4.17:

— *as to applicant's entitlement to apply for and be granted a patent (Rule 4.17(ii))*

Published:

— *with international search report (Art. 21(3))*

(54) Title: HYDRAULIC CYLINDER ANDRELATED ARRANGEMENTS

Fig.4

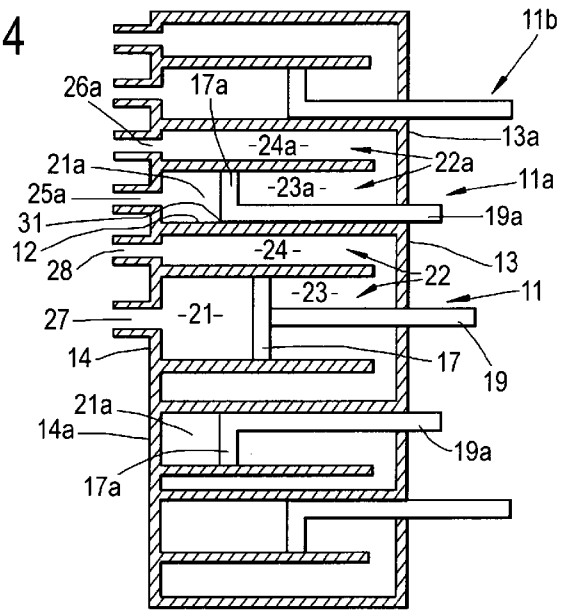

(57) Abstract: A hydraulic cylinder (11) is disclosed comprising a cylinder barrel (12) within which a moveable piston (17) is provided. A piston (17) is connected to a piston-rod (19) and the barrel (12) is divided by the piston (17) into a bottom chamber (21) and a piston-rod side chamber (22). The barrel (12) is configured such that one of the chambers (21, 22) lies substantially concentrically within at least a region of the other chamber (22, 21). The invention also relates to hydraulic arrangements comprising at least one hydraulic cylinder of this type, and preferably a plurality of hydraulic cylinders of this type. The configuration of the hydraulic cylinder allows a multi-cylinder hydraulic actuating unit to be constructed in a more compact manner, with the hydraulic cylinders arranged concentrically. Also disclosed in a method and arrangement for independently controlling the pitch of a plurality of blades in a turbine rotor or a propeller.

WO 2010/037449 A1

HYDRAULIC CYLINDER AND RELATED ARRANGEMENTS

The present invention relates to hydraulic cylinders and to hydraulic arrangements comprising a plurality of hydraulic cylinders, particularly for use as blade-pitch actuators for turbines or propellers.

It has been proposed previously to use hydraulic actuator arrangements to control the pitch of propeller blades on aircraft engines, so that the propeller can be adapted to different thrust levels and air-speeds in order to maximise efficiency and prevent the blades from stalling.

In contra-rotating propeller arrangements, where two propellers are arranged one behind the other for rotation in opposite directions, it has been proposed to provide two hydraulic cylinders; one to control the blade-pitch of each propeller. However, in the environment of an aero-engine, space is very limited, and weight concerns are paramount. It is therefore desirable to provide a hydraulic actuator arrangement comprising two hydraulic cylinders in as compact a package as practicable.

One previously proposed form of dual-cylinder hydraulic actuator for this purpose is illustrated in figure 1. The arrangement illustrated in figure 1 has actually been proposed for use in controlling the blade-pitch of a contra-rotating propfan engine (also sometimes known as an ultra-high bypass engine), which can be considered to represent a modified form of turbofan engine, with a pair of contra-rotating unducted fans arranged outside the engine nacelle.

The prior art arrangement of figure 1 has a first hydraulic cylinder 1 comprising a cylinder barrel 2, within which a piston 3 is provided, the piston being carried at the end of an elongate piston-rod 4. The piston 3 and the piston-rod 4 are both provided with an axial through-bore

5. A second hydraulic cylinder is provided which comprises a cylinder barrel 7 mounted against one end of the barrel 2 of the first cylinder 1. The second hydraulic cylinder also comprises a piston 8 which is carried at the end of an elongate piston-rod 9. The piston-rod 9 of the second hydraulic cylinder 6 is arranged to extend through the central bore 5 of the first piston-rod, and so the two piston-rods are thus arranged for independent, sliding movement relative to one another. Each cylinder is provided with a respective pair of feed/return lines 10 which, because of the end-to-end relation of the two cylinders, are arranged along one side of the arrangement. Each piston rod is mechanically connected to the blades of a respective fan, such that movement of the rods serves to adjust the pitch of the fan blades. The blades of each fan can therefore be pitched independently of those of the other fan.

Because of the end-to-end relation of the two cylinders 1, 6, the prior art actuator arrangement shown in figure 1 has a length which is approximately equal to the sum of the lengths of the two cylinders. Therefore, although this arrangement has a relatively low profile in the vertical sense as illustrated, it is rather long which can cause installation issues. Another drawback of this sort of arrangement is that the feed/return lines are spread along the length of the assembly, which can cause packaging problems for some installations.

Another area where multi-cylinder hydraulic actuators are required is in the field of tidal- or wind-turbines of the sort which are becoming increasingly useful in converting kinetic energy from tidal currents or wind into mechanical energy for the generation of electrical power.

Contra-rotating tidal- or wind-turbines have been proposed, where it is desirable to control the blade-pitch of each

rotor independently. For such installations, an actuator of the sort described above with reference to figure 1 can be difficult to house within the turbine's nacelle, given the size of the hydraulic cylinders required to generate sufficient actuating power, and the restrictions on the size of the nacelle arising from casting limitations and the need to ensure that it can be conveniently transported and manoeuvred in to position at the installation site.

It is essential that tidal- or wind- turbines be configured to stop automatically in case of malfunction, for example if the generator overheats or becomes disconnected from the electrical grid, in which case the generator would no longer brake the rotation of the rotor, with the result that the rotor would start accelerating rapidly and uncontrollably, possibly to the point of destruction. Accordingly, it is a certification requirement that tidal- and wind-turbines have at least two means to prevent such over-speed occurances. One proposal for this has been to use a collective blade-pitching mechanism in which all of the blades of the rotor are pitched in synchronism, together with a separate mechanical disc-brake. In such an arrangement, the collective blade pitching arrangement represents one braking mechanism, and the disc-brake represents the second braking mechanism. However, in order to provide effective braking to a large tidal- or wind-turbine, the disc brake arrangement needs to have a very large size and mass, which is disadvantageous from the point of view of installation constraints, particularly in the case of a wind turbine where the brake mechanism needs to be supported at the top of a tall support tower which for aerodynamic reasons must be made as slender as possible.

It is an object of the present invention to provide an improved hydraulic cylinder for possible use in a multi-

cylinder hydraulic arrangement, and to provide an improved hydraulic arrangement incorporating such a cylinder.

Accordingly, a first aspect of the present invention provides a hydraulic cylinder comprising a cylinder barrel within which a moveable piston is provided, the piston being connected to a piston-rod; wherein the barrel is divided by the piston in to a bottom chamber and a piston-rod side- chamber, the barrel being configured such that one of said chambers lies substantially concentrically within at least a region of the other chamber.

Preferably, the bottom chamber lies concentrically within at least a region of the piston-rod side-chamber.

In a preferred arrangement, the barrel is closed at one end by a cylinder head through which the piston-rod extends, and is closed at the other end by a cylinder bottom, each said chamber being provided in fluid communication with a respective port, both of the ports being provided through the cylinder bottom.

Alternatively, the piston-rod side-chamber can lie concentrically within at least a region of the bottom chamber. In such an arrangement, the barrel is preferably closed at one end by a cylinder head through which the piston-rod extends, and is closed at the other end by a cylinder bottom, each said chamber being provided in fluid communication with a respective port, both of the ports being provided through the cylinder head.

In a preferred arrangement, one of said chambers is substantially cylindrical in form and lies substantially concentrically within an annular region of the other chamber.

The annular region of the other chamber may be configured so as to have an inner profile which tapers towards the port of the chamber.

According to another aspect of the present invention, there is provided a hydraulic arrangement comprising a first hydraulic cylinder of the type disclosed above, provided in combination with a second hydraulic cylinder, the first and second cylinders being arranged substantially concentrically.

In such an arrangement, the second cylinder is preferably provided within an axial throughbore extending through the piston and the piston-rod of the first cylinder.

Preferably, the bottom chamber of the first hydraulic cylinder is substantially annular in form and is provided around at least a region of the second hydraulic cylinder.

Alternatively, the first cylinder may be provided within an axial throughbore extending through the piston and the piston-rod of the second cylinder.

The second cylinder may be configured so as to have a form generally similar to that of the first cylinder described above.

A hydraulic arrangement falling within the scope of the present invention may also comprise at least one additional hydraulic cylinder (i.e. an hydraulic cylinder in addition to the first and second hydraulic cylinders mentioned above), such that all of the hydraulic cylinders of the arrangement are substantially concentric with respect to one another. In such an arrangement the or each additional cylinder may preferably have a similar form to the first and second cylinders described above.

Preferably, the hydraulic cylinders each have a barrel of substantially equal length, the barrels being substantially aligned with one another.

A hydraulic arrangement as described above may be configured to hydraulically actuate a variable pitch

turbine rotor, for example a rotor forming part of a tidal- or wind-turbine.

In such an arrangement, each hydraulic cylinder may be arranged to control the pitch of a respective rotor blade.

Alternatively, each hydraulic cylinder may be arranged to collectively control the pitch of the blades of a respective rotor in a contra-rotating turbine arrangement.

Another aspect of the invention provides a wind or tidal turbine having a multi-cylinder hydraulic arrangement of the type identified above, wherein the hydraulic arrangement is configured to control the pitch of the rotor blades during rotation of the rotor such that the pitch of each blade changes from a first predetermined pitch to a second predetermined pitch as the blade passes a first predetermined position, and subsequently returns to said first pitch as the blade passes a second predetermined position.

In a preferred arrangement, the rotor is supported for rotation about a substantially horizontal axis by a support structure, the arrangement being such that during rotation of the rotor each said blade becomes overlapped with the support structure substantially at said first predetermined position, and subsequently moves clear of said support structure substantially at said second predetermined position.

A hydraulic arrangement of the type described above may also be configured to hydraulically actuate a variable pitch propeller arrangement. In such a case, each hydraulic cylinder may be arranged to control the blade-pitch of a respective propeller of a contra-rotating propeller arrangement, for example for use in a propfan engine.

It is another object of the present invention to provide an improved method of adjusting the pitch of the blades of a propeller or turbine.

Accordingly, there is also provided a method of controlling the pitch of a plurality of blades within a turbine rotor or a propeller, the method comprising the step of providing each blade with a respective pitch-actuator, and actuating each said pitch-actuator independently of the or each other pitch-actuator so as to adjust the pitch of the blades independently of one another.

The method may comprise the step of actuating the pitch-actuator of each blade during rotation of the rotor or propeller such that the pitch of said blade changes from a first predetermined pitch to a second predetermined pitch as the blade passes a first predetermined position, and the subsequent step of actuating the pitch-actuator of said blade such that its pitch returns to said first pitch as the blade passes a second predetermined position.

In such a method employed to control the pitch of blades within a wind or tidal turbine rotor, the turbine rotor is preferably supported for rotation about a substantially horizontal axis by a support structure, and wherein each said blade becomes overlapped with the support structure substantially at said first predetermined position, and subsequently moves clear of said support structure substantially at said second predetermined position.

The method may preferably involve the use of a multi - cylinder hydraulic arrangement of the type identified above, wherein each hydraulic cylinder is used as a respective said pitch-actuator to hydraulically control the pitch of a respective blade.

So that the invention may be more readily understood, and so that further features thereof may be appreciated, embodiments of the invention will now be described, by way of example, with reference to the accompanying drawings, in which:

Figure 1 (referred to above) is a sectional drawing illustrating a prior art multi-cylinder hydraulic actuator;

Figure 2 is a perspective view illustrating a hydraulic cylinder in accordance with a first embodiment of the present invention;

Figure 3 is a perspective view illustrating a hydraulic cylinder in accordance with a second embodiment of the present invention;

Figure 4 is a sectional view illustrating a multi-cylinder hydraulic arrangement incorporating a hydraulic cylinder of the type illustrated in figure 2;

Figure 5 is a sectional view similar to that of figure 4 illustrating an alternative multi-cylinder hydraulic arrangement incorporating a hydraulic cylinder of the type illustrated in figure 3;

Figure 6 is a sectional view of an alternative multi-cylinder hydraulic arrangement incorporating a modified form of the hydraulic cylinder illustrated in figure 2;

Figure 7 is a schematic drawing showing the internal profile of an inner chamber of an alternative form of hydraulic cylinder;

Figure 8 is a perspective view illustrating a hydraulic cylinder incorporating a piston-rod side-chamber having a region shaped as illustrated in figure 7;

Figure 9 is a schematic drawing illustrating a hydraulic arrangement in accordance with the present invention provided as part of a tidal- or wind-turbine;

Figure 10 is an enlarged view of part of the arrangement illustrated in figure 9;

Figure 11 is a schematic front elevation showing three successive positions of the rotor of a wind turbine;

Figure 12 is a perspective view corresponding generally to that of figure 9, but illustrating a tidal- or wind-turbine having two contra-rotating rotors;

Figure 13 is a longitudinal sectional view through a contra-rotating propfan engine incorporating a hydraulic actuating arrangement in accordance with the present invention; and

Figure 14 is a longitudinal sectional view corresponding generally to that of figure 13, showing a contra-rotating propfan engine incorporating a hydraulic actuating arrangement in accordance with another embodiment of the present invention.

Referring now to figure 2, there is illustrated a hydraulic cylinder 11 in accordance with the present invention. The cylinder 11 comprises a cylinder barrel 12 which is closed at one end by a cylinder head 13 and which is closed at the opposite end by a cylinder bottom 14. As will be appreciated, the cylinder barrel takes the form of a right-circular cylinder.

An internal chamber wall 15, in the form of a right circular cylinder of reduced diameter compared to the cylinder barrel 12, is provided within the cylinder barrel 12 and extends from the cylinder bottom 14 towards the cylinder head 13, terminating at an open end 16 spaced slightly inwardly of the cylinder head 13.

A piston 17 is provided within the internal space defined by the chamber wall 15, the piston 17 being slideably moveable within the cylinder and being provided in sealing engagement around its periphery with the inner surface of the internal chamber wall 15. The piston 17 is mounted to an inner end 18 of a piston-rod 19, the piston-rod 19 extending through the open end 16 of the internal

chamber wall 15 and through a sealed opening 20 formed at the centre of the cylinder head 13.

The moveable piston 17 thus divides the cylinder barrel 13 in to two fluidly-distinct chambers. One of these chambers represents a bottom chamber 21 and is defined within the internal chamber wall 15, between the cylinder bottom 14 and the piston 17. The other chamber represents a piston-rod side-chamber 22 on the piston-rod side of the piston 17. The piston-rod side-chamber has two regions which are in substantially free fluid-communication with one another, namely an inner region 23 located within the internal chamber wall 15, and an outer annular region 24 located outside the internal chamber wall 15.

As can also be seen in figure 2, the hydraulic cylinder 11 is provided with a pair of ports. Firstly, a port 25 is provided through the cylinder bottom 14 in fluid-communication with the bottom chamber 21 within the confines of the internal chamber wall 15. A second port 26 is also provided through the cylinder bottom 14, but this port lies outside the confines of the internal chamber wall 15 so as to lie in fluid-communication with the piston-rod side-chamber 22, and in particular so as to lie in direct fluid-communication with the outer annular region 24. The ports 25, 26 are each connected to a respective hydraulic fluid feed/return line 27, 28.

As will be appreciated, if hydraulic fluid is supplied under pressure along the feed line 27, through the port 25 and in to the bottom chamber 21, the piston 17 will be driven away from the cylinder bottom 14 with the result that the piston-rod 19 is moved so as to extend further out of the sealed opening 20 provided in the cylinder head 13. As the piston is moved in this way, the hydraulic fluid within the piston-rod side-chamber 22 is driven out through the port 26 and along the return line 28. The operation of

the hydraulic cylinder is reversed when hydraulic fluid is provided under pressure along the line 28 so as to pass through the port 26 in to the piston-rod side-chamber 22.

It should be appreciated that in the hydraulic cylinder arrangement illustrated in figure 2, the inner region 23 of the piston-rod side-chamber 21 is substantially cylindrical in form and lies concentrically within the outer annular region 24 of the piston-rod side-chamber 22. This arrangement is also illustrated in figure 4 (which will be discussed in more detail hereinafter) in which the central hydraulic cylinder 11 is constructed exactly as described above and as illustrated in figure 2.

Turning now to consider figure 3, however, there is illustrated an alternative embodiment of the hydraulic cylinder of the present invention, in which the positions of the bottom chamber 21 and the piston-rod side-chamber 22 have been effectively swapped such that the piston-rod side-chamber 22 is substantially cylindrical in form and lies concentrically within an annular region of the bottom chamber 21. In this arrangement the cylinder head 13, through which the piston-rod 19 extends, is shown at the left hand end of the cylinder barrel 12, whilst the cylinder bottom 14 is shown at the right hand end. In this arrangement, the internal chamber wall 15 has the same general form as in the arrangement illustrated in figure 2, but is now closed at one end by the cylinder head 13 and extends towards the cylinder bottom 14 so as to terminate at an open end 16 located slightly inwardly of the cylinder bottom 14. The effect of this reversed arrangement is that the bottom chamber 21 of the arrangement shown in figure 3 has a configuration generally similar to that of the piston-rod side-chamber 22 of the arrangement in figure 2, and thus comprises two distinct regions, namely an inner

region 29 of generally cylindrical form lying within an outer annular region 30.

As will be appreciated from a consideration of figure 3, in order to allow the piston-rod 19 to pass through the sealed opening 20 formed centrally within the cylinder head 13, the feed/return line 28 and its associated port 26 provided in fluid-communication with the piston-rod side-chamber 22 has been moved off-axis.

Another notable difference between the arrangements illustrated in figure 2 and figure 3 is that in the arrangement of figure 3, the ports 25, 26 are provided through the cylinder head 13, whereas in the arrangement of figure 2, the ports 25, 26 are provided through the cylinder bottom 14. Nevertheless, it should be appreciated that in both of these arrangements the cylinder barrel 12 is divided by the piston 17 in to a bottom chamber and a piston-rod side-chamber, such that one of those chambers (the bottom chamber in the case of figure 2, and the piston-rod side-chamber 22 in the case of figure 3) lies substantially concentrically within at least a region of the other chamber. This means that the ports 25, 26 can both be provided through the same end plate of the cylinder 11 (the ports 25, 26 being formed through the cylinder bottom 14 in the case of figure 2, and being provided through the cylinder head 13 in the case of figure 3). This provides significant packaging advantages when providing a hydraulic arrangement comprising a plurality of hydraulic cylinders, as will now be explained in more detail with regard to figure 4.

Figure 4 illustrates a hydraulic arrangement in accordance with the present invention which incorporates three hydraulic cylinders arranged generally concentrically with respect to one another. The first hydraulic cylinder 11 takes the form described above and illustrated in figure

2 and is located centrally within the array. A second hydraulic cylinder 11a is provided around the outside of the first cylinder 11. In order to permit this arrangement, the piston 17a of the second cylinder 11a has a generally annular form defining a relatively large central opening 31 through which the cylinder barrel 12 of the first hydraulic cylinder 11 is slideably received. As will be apparent from figure 4, the piston-rod 19a of the second cylinder 11a also has a relatively large complimentary central bore through which the cylinder barrel 12 of the first cylinder 11 is slideably received.

The cylinder head 13a of the second cylinder 11a also has a generally annular form, as indeed does the cylinder bottom 14a. As will therefore be appreciated, the entire construction of the second hydraulic cylinder 11a is generally annular in form so as to lie substantially concentrically around the centrally located first hydraulic cylinder 11. This means that in the arrangement illustrated in figure 4, the bottom chamber 21a of the second hydraulic cylinder 11a has a generally annular form extending around the periphery of the cylinder barrel 12 of the first hydraulic cylinder 11. Similarly, the inner region 23a of the piston-rod side-chamber 22a of the second hydraulic cylinder 11a also has an annular form with the outer annular region 24a lying outside it. The bottom chamber 21a and the outer annular region 24a of the piston-rod side-chamber 22a are both each provided with respective fluid ports 25a, 26a provided through the cylinder bottom 14a in the same manner as in the case of the central first hydraulic cylinder 11.

Although it will not be described in detail here, the hydraulic arrangement of figure 4 also comprises a third hydraulic cylinder 11b, having a configuration substantially identical to that of the second hydraulic

cylinder 11a, and thus having a generally annular form so as to lie around the outer periphery of the second hydraulic cylinder 11a.

It will therefore be appreciated that the arrangement illustrated in figure 4 comprises three concentrically arranged hydraulic cylinders, all of which have cylinder barrels 12, 12a, 12b of substantially equal length such that the respective cylinder heads 13, 13a, 13b and the respective cylinder bottoms 14, 14a, 14b are effectively aligned and may thus be defined by a unitary end plate. This arrangement therefore allows the provision of a plurality of individually operable hydraulic cylinders in a unit of significantly reduced length compared to the prior art illustration of figure 1. Of course, the arrangement illustrated in figure 4 will grow in radial dimension with each additional hydraulic cylinder but in certain applications, such as within the nacelles of tidal- or wind-turbines, it has been found that this increased dimension can be more readily accommodated than an arrangement of very long length such as that illustrated in figure 1.

Another advantage with the arrangement illustrated in figure 4 is that the feed/return ports 25, 26, 25a, 26a are more conveniently arranged on a single end face of the hydraulic arrangement which has been found to enable the associated feed/return lines to be packaged more compactly than in the sort of arrangement as illustrated in figure 1 in which the feed lines are spread along the length of the hydraulic arrangement.

Of course, whilst the concentric arrangement illustrated in figure 4 has been described with reference to use of a central hydraulic cylinder 11 of the type illustrated in figure 2 and with annular derivatives of the cylinder illustrated in figure 2, variants of the invention

could be constructed using a central cylinder of the alternative form illustrated in figure 3 and annular derivatives thereof.

Figure 5 illustrates an arrangement based generally on that of figure 4, but with the central cylinder having been replaced with a cylinder of the type illustrated in figure 2, and with the third cylinder 11b having been removed. It will be noted, however, that the second cylinder 11a is identical to that of the arrangement shown in figure 4. As will be noted from consideration of figure 5, the central cylinder 11 is effectively reversed from the orientation shown in figure 4 such that its piston rod 19 extends in the opposite direction to the piston 19a of the second annular cylinder 11a. The piston rod side chamber 22 is therefore substantially cylindrical in form and lies concentrically within an annular region 30 of the bottom chamber 21. It should thus be noted that in this arrangement the cylinder head 13, through which the piston-rod 19 extends is located at the left-hand-end of the arrangement as illustrated, and is thus contiguous with the cylinder bottom 14a of the second cylinder 11a. Similarly, the cylinder bottom 14 of the central cylinder 11 is now contiguous with the cylinder head 13a of the second cylinder.

Turning now to consider figure 6, there is illustrated an alternative embodiment of hydraulic arrangement comprising a central hydraulic cylinder 32 around which is provided an annular hydraulic cylinder 11a of identical configuration to the second hydraulic cylinder 11a described above and illustrated in the arrangements of figures 4 and 5. However, in this arrangement, it will be noted that the central hydraulic cylinder 32 has a different form to any of those described above.

The central hydraulic cylinder 32 of the arrangement illustrated in figure 5 is not configured so that the bottom chamber lies substantially concentrically within a region of the piston-rod side-chamber or *vice-versa*. Instead, the central hydraulic cylinder 32 takes a more conventional form in which the bottom chamber 33 is defined to one side of the piston 34 and the piston-rod side-chamber 35 is defined entirely on the other side of the piston 34, actually within the piston-rod 36 which in this arrangement is hollow. In order to provide fluid-communication with the piston-rod side-chamber 35, via a fluid line 37 formed through the same end plate as the fluid lines 27a, 28a of the annular cylinder 11a, the piston 34 has an annular form and is arranged to slide over an axial fluid supply pipe 38. The end of the fluid supply pipe 38 on the piston-rod side of the piston 34 carries a bracket 39 to which the cylinder head 40 of the central hydraulic cylinder 32 is secured and retained in position.

Figures 7 and 8 illustrate a possible modification to the cylinder arrangements illustrated in figures 2 and 3 which has been proposed in order to improve the hydraulic efficiency of the cylinder arrangement. In this modified version, the outer annular region 24 of the piston-rod side-chamber 22 has been modified so as to have an inner profile which tapers (i.e. narrows) towards the port 26. Figure 7 illustrates, in schematic form, the preferred form of the tapering inner profile for the outer and inner region 24. It is believed that by using the tapering profile illustrated in figures 7 and 8, pressure losses within the hydraulic fluid can be reduced when compared to the arrangement illustrated in figure 2 in which there is a large step-up in area between the outlet area of the port 26 and the area of the annular region 24 with which it communicates. It is envisaged that the arrangement

illustrated in figure 3 could also be modified in a similar manner to that illustrated in figures 7 and 8 such that the outer annular region 30 of the bottom chamber 21 would have an inner profile tapering towards the port 25.

Turning now to consider figure 9, there is illustrated, in schematic form, a cut away view of a tidal turbine incorporating a hydraulic actuating arrangement comprising a pair of concentric hydraulic cylinders in accordance with the present invention. However, it should be appreciated that the arrangement illustrated in figure 9 could also serve as a wind-turbine with relatively minor modifications. Also, it should be noted that for the sake of simplicity and clarity, the turbine rotor illustrated in figure 8 comprises only two rotor blades 40, 41, the pitch of each being independently controlled by a respective hydraulic cylinder 11, 11a. However, it is common in tidal- and wind-turbine installations to use turbine rotors comprising three or possibly even more rotor blades, in which case the pitch of each additional rotor blade would also be controlled by a respective hydraulic cylinder, necessitating a three- or four-cylinder hydraulic actuator.

Each rotor blade 40, 41 is connected to a central hub 44 of the turbine for individual rotation about a respective longitudinal blade axis 45, 46. The central hub 44 is mounted for rotation relative to a fixed nacelle 47, about a longitudinal axis 48.

The hub 44 is fixed to a central shaft 49 which runs along the longitudinal axis 48 and is connected at its opposite end to a generator 50 housed within the nacelle 47 in a manner known *per se*. Also housed within the fixed nacelle 47 is a hydraulic supply system 51 which comprises at least one hydraulic pump and a hydraulic fluid reservoir connected via feed/return lines (indicating generally at

52) to the inner chambers of the respective hydraulic cylinders 11, 11a in order to operate the cylinders.

As illustrated more clearly in figure 10, the stem 42, 43 of each rotor blade 40, 41 is rotatably connected, at a point 52 which is spaced radially from the respective blade axis to the end 53 of a respective cranked connecting rod 54, 55. Thus, each connecting rod 54, 55 has a longitudinal arm 56, 57 which lies substantially parallel to the longitudinal axis 48. The opposite end of each connecting rod 54, 55 is fixably connected to a respective thrust bearing 58, 59 mounted to the projecting end of a respective hydraulic cylinder piston 19, 19a.

As each hydraulic cylinder 11, 11a is actuated, such that its associated piston 19, 19a is moved axially along the longitudinal axis 48, linear motion is imparted to the respective connecting rods 54, 55, as represented schematically by arrow 60 in figure 10 which, by virtue of the eccentric connection between the end 53 of the connecting rod and the respective blade stem 42, 43, imparts a rotational deflection to the respective rotor blade 40, 41, about the respective blade axis 45, 46. In this manner, hydraulic operation of each cylinder 11, 11a serves to control the pitch of a respective blade 40, 41.

As will be appreciated, in the embodiment illustrated in figure 9, the pistons 19, 19a of the two hydraulic cylinders do not rotate significantly around the longitudinal axis 48, the thrust bearings 58, 59 serving to allow the hub 44 and the associated blades 40, 41 to rotate. However, it is envisaged that the arrangement of figure 9 could be modified by allowing the pistons 19, 19a to rotate within the respective hydraulic cylinders 11, 11a, thereby eliminating the need for the thrust bearings 58, 59. Of course, given the likely speed of rotation required (approximately 20rpm in the case of a tidal

turbine), such a modification would require very effective seals between the hydraulic cylinders and their respective rotating pistons.

As will also be appreciated from figure 9, in the specific arrangement illustrated, the piston 19 of the central hydraulic cylinder 11 has an annular form provided around the central shaft 49, thereby allowing the shaft 49 to rotate within the piston 19. Such an arrangement would require one of the feed/return lines 52 to be moved off-centre with respect to the longitudinal axis of the hydraulic cylinder 11, in a manner generally similar to that illustrated in figure 3. Nevertheless, the arrangement illustrated in figure 9 allows the feed/return lines 52 all to be located on an end face of the hydraulic arrangement, thereby leading to a very neat and efficient network of piping.

It is envisaged that an electronic control system arranged to sense individual blade position and hub speed would be used to calculate the direction and degree of blade-pitch-adjustment required, converting this into a target linear movement required by the relevant piston.

A hydraulic actuating arrangement of the type shown in figure 9 lends itself particularly well to use as a braking device in the context of a tidal- or wind-turbine installation. As previously mentioned, it is important that all tidal- or wind-turbines are provided with at least two mechanisms to slow the turbine rotor in the event of failure or disconnection of the generator, or some other malfunction which would otherwise cause the rotor to accelerate without control. Prior art arrangements achieve this by using collective pitch-control of all the turbine blades as one brake mechanism, and a disc brake as a second brake mechanism. However, the present invention proposes independently controlling the pitch of each turbine blade

40, 41 such that the pitch control mechanism associate with each blade represents a separate brake mechanism. So, taking the example shown in figure 9, in the event of a failure occurring which causes the turbine rotor to begin accelerating without the normal load applied through the generator 50, the two hydraulic cylinders 11, 11a can be actuated independently of one another so as to move the two blades to different pitches, the effect of which is to slow the rotor very rapidly. However, should one of the two hydraulic cylinders 11, 11a fail, the pitch of the other blade can still be adjusted by the remaining cylinder in order to slow the rotor, thereby providing sufficient redundancy, such that the large and inconvenient disc-brake of the prior art arrangements can be dispensed with.

Turning now to consider figure 11a there is illustrated a wind-turbine arrangement comprising a supporting structure in the form of a pylon 58. The pylon supports a fixed nacelle 59 at its upper end, and a turbine rotor 60 is mounted for rotation about a substantially horizontal axis relative to the nacelle 59. The rotor 60 illustrated comprises three variable pitch rotor blades 61, 62, 63, each of which is mounted for rotation about a respective longitudinal blade axis 64, 65, 66. It is envisaged that the pitch of the blades 61, 62, 63 will be individually controlled via a three-cylinder version of the hydraulic actuator arrangement illustrated in figure 9, each hydraulic cylinder being arranged to control the pitch of a respective blade.

As will now be explained in further detail with reference to figures 11a, 11b and 11c, one aspect of the present invention proposes individually adjusting the pitch of each blade 61, 62, 63 as it moves past the support pylon 58, in order to account for the non-uniform flow of air (or

in the case of a tidal turbine, water) through the rotor in the region of the pylon.

Figure 11a shows the rotor 60 in a position in which each of the three blades is substantially clear of the pylon 58. In this rotational position it is proposed that each blade 61, 62, 63 will be trimmed about its respective axis 64, 65, 66 so as to have a first predetermined pitch, the first predetermined pitch being appropriate for the instant wind conditions.

Figure 11b shows the rotor 60 in a subsequent position during its rotation in which the blade 61 is partially overlapped with the support pylon 58. The position of the blade 61 shown in figure 11b represents a first predetermined position, in which the longitudinal axis 64 of the blade lies coincident with a nominal radial axis 65 which makes an acute angle α to the vertical. When the blade 61 reaches its first predetermined position, its respective hydraulic actuator is actuated to adjust the pitch of the blade, changing its pitch from the first predetermined pitch to an alternate second predetermined pitch, the second predetermined pitch being calculated as more efficient for the local flow conditions whilst the blade moves past the pylon 58.

Figure 11c shows the rotor in a subsequent position, in which the blade 61 has moved substantially past the pylon 58 and is about to clear the pylon. The position of the blade 61 shown in figure 11c represents a second predetermined position, in which the longitudinal axis 64 of the blade lies coincident with a second nominal radial axis 66 on the opposite side of the pylon and which makes an acute angle θ to the vertical. When the blade 61 reaches its second predetermined position, its respective hydraulic actuator is actuated again to adjust the pitch of the blade, returning its pitch from the second

predetermined pitch to the first predetermined pitch for optimal operation in the region of substantially undisturbed airflow away from the pylon 58.

Each of the other rotor blades 62, 63 are also successively adjusted in the manner described above, as they move past the pylon 58.

It is envisaged that in most installations, the angle α will be substantially equal to the angle θ, but it is to be appreciated that this is not essential. It should also be noted that the values of angles α and θ can be adjusted depending on the particular characteristics of any given pylon/rotor/prevailing wind combination. For example, in some installations it may be appropriate to allow each blade to become more overlapped with the pylon than shown in figure 11b before the pitch of the blade is adjusted, in which case the angle α would be reduced from that shown in figure 11b.

Whilst this aspect of the invention has been described above with reference to figures 11a, 11b and 11c in the context of a wind-turbine, it should be appreciated that a similar pitch-adjustment regime could be applied to the blades of a tidal-turbine.

It is also thought that the above-described method of varying the pitch of each blade as it moves through a lower region of its rotational path could be used to improve the overall performance of a wind- or -tidal turbine by adjusting the pitch of each blade to account for the local reduction in working medium (air or water flow rate respectively) in the lower region of the rotor due to altitude/depth mass flow gradient variations caused by a surface boundary layer.

Figure 12 illustrates an arrangement generally similar to that illustrated in figure 9, except the arrangement of figure 12 shows a wind- or tidal-turbine comprising a pair

of contra- rotating rotors 69, 70. In this arrangement, the central hydraulic cylinder 11 is arranged to collectively control the pitch of the rotor blades 71 of the first turbine rotor 69, whilst the second hydraulic cylinder 11a is arranged to collectively control the pitch of the blades 72 of the second rotor 70. In this arrangement, because the two rotors 69, 70 are spaced apart from one another along the longitudinal axis 48, the pistons 19, 19a of the hydraulic cylinders can be arranged so as to have a length appropriate to eliminate the need for cranked connecting rods as illustrated in the arrangement of figure 9. In this arrangement, the rotor blades 71, 72 are each connected to the respective thrust bearing 67, 68 by radially arranged, substantially straight connecting rods 73, 74.

Turning now to consider figure 13, a contra-rotating propeller gas turbine engine (commonly known as a "propfan" engine) is indicated at 75 and has a principal and rotational axis 76. The engine 75 comprises a core engine 77 having, in axial flow series, an air intake 78, an intermediate pressure compressor 79 (IPC), a high pressure compressor 80 (HPC), combustion equipment 81, a high pressure turbine 82 (HPT), a low pressure turbine 83 (IPT), a free power turbine 84 (LPT) and a core exhaust nozzle 85. A nacelle 86 generally surrounds the core engine 77 and defines the intake 78 and nozzle 85 and a core exhaust duct 87. The engine also comprises two contra-rotating propellers 88, 89 attached to and driven by the free power turbine 84, which comprises contra-rotating blade arrays 90, 91.

The gas turbine engine 75 works in a conventional manner so that air entering the intake 78 is accelerated and compressed by the IPC 79 and directed in to the HPC 80 where further compression takes place. The compressed air

exhaustives from the HPC 80 is directed in to the combustion equipment 81 where it is mixed with fuel and the mixture is combusted. The resultant hot combustion products then expand through, and thereby drive, the high, low-pressure and free power turbines 82, 83, 84 before being exhausted through the nozzle 85 to provide some propulsive thrust. The high, low-pressure and free power turbines 82, 83, 84 respectively drive the high and intermediate pressure compressors 80, 79 and the propellers 88, 89 by suitable inter-connecting shafts. Propellers 88, 89 normally provide the majority of propulsive thrust.

The engine of figure 13 incorporates a hydraulic actuating arrangement comprising a pair of concentric cylinders in accordance with the present invention. The piston-rod 19 of a central hydraulic cylinder 11 extends axially from a cylinder barrel arrangement 92, and carries a plurality of radially extending connecting rods 93 at its free end (only two connecting rods illustrated). Each connecting rod 93 is connected to the root of a respective blade of the first propeller 88, in a manner generally similar to that of the arrangement described above with regard to figures 9 and 12. Similarly, the piston rod 19a of an outer annular hydraulic cylinder 11a extends outwardly from the cylinder barrel arrangement 92 and carries a plurality of radially extending connecting rods 94 at its free end (only two connecting rods illustrated). Each connecting rod 94 is connected to the root of a respective blade of the second propeller 89.

As will be understood, actuation of the first hydraulic cylinder 11 thus serves to adjust the pitch of each blade of the first propeller 88, whilst actuation of the second hydraulic cylinder 11a serves to adjust the pitch of each blade of the second propeller 89.

Figure 14 illustrates a similar propfan engine to that illustrated in figure 13, but shows the hydraulic actuating arrangement having been replaced with one of the type illustrated in figure 5. In this arrangement, the central hydraulic cylinder 11 serves to adjust the pitch of the second propeller 89, via its piston-rod 19 and a similar arrangement of radial connecting rods 94. The second, annular, piston rod 19a exits the cylinder barrel housing 92 from the opposite end and serves to adjust the pitch of the first propeller 88. As will be seen from figure 13, because the pistons 19, 19a of the two hydraulic cylinders 11, 11a of this arrangement extend in opposite directions, the cylinder barrel housing 92 can be more conveniently located between the axial positions of the two propellers 88, 89, where there is more space available.

While the invention has been described in conjunction with the exemplary embodiments described above, many equivalent modifications and variations will be apparent to those skilled in the art when given this disclosure. Accordingly, the exemplary embodiments of the invention set forth above are considered to be illustrative and not limiting. Various changes to the described embodiments may be made without departing from the spirit and scope of the invention.

Claims:

1. A hydraulic cylinder (11) comprising: a cylinder barrel (12) within which a moveable piston (17) is provided, the piston (17) being connected to a piston-rod (19); wherein the barrel (12) is divided by the piston (17) into a bottom chamber (21) and a piston-rod side chamber (22), characterised by the barrel (12) being configured such that one of said chambers (21, 22) lies substantially concentrically within at least a region of the other chamber (22, 21).

2. A hydraulic cylinder according to claim 1, wherein the bottom chamber (21) lies concentrically within at least a region (24) of the piston-rod side chamber (22).

3. A hydraulic cylinder according to claim 1 or claim 2, wherein the barrel (12) is closed at one end by a cylinder head (13) through which the piston-rod (19) extends, and is closed at the other end by a cylinder bottom (14), each said chamber (21, 22) being provided in fluid communication with a respective port (25, 26), both of the ports being provided through the cylinder bottom (14).

4. A hydraulic cylinder according to claim 1, wherein the piston-rod side-chamber (22) lies concentrically within at least a region of the bottom chamber (21).

5. A hydraulic cylinder according to claim 1 or claim 4, wherein the barrel (12) is closed at one end by a cylinder head (13) through which the piston-rod (19) extends, and is closed at the other end by a cylinder bottom (14), each said chamber (21, 22) being provided in fluid communication with a respective port (25, 26), both of the ports being provided through the cylinder head (13).

6. A hydraulic cylinder according to any preceding claim, wherein one of said chambers (21, 22) is substantially cylindrical in form and lies substantially concentrically

within an annular region (24, 30) of the other chamber (22, 21).

7. A hydraulic cylinder according to claim 6 as dependant upon either claim 3 or claim 4, wherein the annular region (24, 30) of the other chamber (22, 21) is configured so as to have an inner profile which tapers towards the port (25, 26) of the chamber.

8. A hydraulic arrangement comprising a first hydraulic cylinder (11) in accordance with any one of claims 1 to 7 provided in combination with a second hydraulic cylinder (11a), wherein the first (11) and second (11a) cylinders are arranged substantially concentrically.

9. A hydraulic arrangement according to claim 8, wherein the second cylinder (32) is provided within an axial throughbore (31) extending through the piston (17a) and the piston-rod (19a) of the first cylinder (11a).

10. A hydraulic arrangement according to claim 9, wherein the bottom chamber (21a) of the first hydraulic cylinder (11a) is substantially annular in form and is provided around at least a region of the second hydraulic cylinder (32).

11. A hydraulic arrangement according to claim 8, wherein the first cylinder (11) is provided within an axial throughbore (31) extending through the piston (17a) and the piston-rod (19a) of the second cylinder (11a).

12. A hydraulic arrangement according to any one of claims 8 to 11, wherein the second cylinder (11a) is also in accordance with any one of claims 1 to 7.

13. A hydraulic arrangement according to claim 11 or claim 12, wherein the bottom chamber (21a) of the second hydraulic cylinder (11a) is substantially annular in form and is provided around at least a region of the first hydraulic cylinder (11a).

14. A hydraulic arrangement according to any one of claims 8 to 13 comprising at least one additional hydraulic cylinder (11b) such that all of the hydraulic cylinders (11, 11a, 11b) are substantially concentric with respect to one another.

15. A hydraulic arrangement according to claim 14, wherein the or at least one said additional cylinder (11b) is in accordance with any one of claims 1 to 7.

16. A hydraulic arrangement according to any one of claims 8 to 15, wherein the hydraulic cylinders (11, 11a, 11b) each have a barrel (12, 12a, 12b) of substantially equal length, the barrels being substantially aligned with one another.

17. A hydraulic arrangement according to any one of claims 8 to 16 configured to hydraulically actuate a variable pitch turbine rotor.

18. A hydraulic arrangement according to claim 17, wherein each hydraulic cylinder (11, 11a) is arranged to control the pitch of a respective rotor blade (40, 41).

19. A hydraulic arrangement according to claim 17, wherein each hydraulic cylinder (11, 11a) is arranged to collectively control the pitch of the blades (71, 72) of a respective rotor (69, 70) in a contra-rotating turbine arrangement.

20. A wind or tidal turbine having a hydraulic arrangement according to any one of claims 17 to 19.

21. A wind or tidal turbine having a hydraulic arrangement according to claim 18, wherein the hydraulic arrangement is configured to control the pitch of the blades (61,62,63) during rotation of the rotor (60) such that the pitch of each blade changes from a first predetermined pitch to a second predetermined pitch as the blade passes a first predetermined position (65), and subsequently returns to

said first pitch as the blade passes a second predetermined position (66).

22. A wind or tidal turbine according to claim 21, wherein the turbine rotor (60) is supported for rotation about a substantially horizontal axis by a support structure (58), the arrangement being such that during rotation of the rotor (60) each said blade (61,62,63) becomes overlapped with the support (58) structure substantially at said first predetermined position (65), and subsequently moves clear of said support structure (58) substantially at said second predetermined position (66).

23. A hydraulic arrangement according to any one of claims 8 to 16 configured to hydraulically actuate a variable pitch propeller arrangement (88, 89).

24. A hydraulic arrangement according to claim 23, wherein each hydraulic cylinder (11, 11a) is arranged to control the blade-pitch of a respective propeller (88, 89) in a contra-rotating propeller arrangement.

25. A contra-rotating propfan engine (75) having a hydraulic arrangement according to claim 24.

26. A method of controlling the pitch of a plurality of blades (61,62,63) within a turbine rotor (60) or a propeller, the method comprising the steps of providing each blade with a respective pitch-actuator, and actuating each said pitch-actuator independently of the or each other pitch-actuator so as to adjust the pitch of the blades (61,62,63) independently of one another.

27. A method according to claim 26 for controlling the pitch of the blades (61,62,63) within a wind- or tidal-turbine rotor.

28. A method according to claim 26 or claim 27, comprising the step of actuating the pitch-actuator of each blade (61,62,63) during rotation of the rotor (60) or propeller such that the pitch of said blade (61) changes from a first

predetermined pitch to a second predetermined pitch as the blade (61) passes a first predetermined position (65), and the subsequent step of actuating the pitch-actuator of said blade (61) such that its pitch returns to said first pitch as the blade passes a second predetermined position (66).

29. A method according to claim 28 as dependant upon claim 27, wherein the turbine rotor (60) is supported for rotation about a substantially horizontal axis by a support structure (58), and wherein each said blade (61,62,63) becomes overlapped with the support structure (58) substantially at said first predetermined position (65), and subsequently moves clear of said support structure substantially at said second predetermined position (66).

30. A method according to any one of claims 26 to 29 involving the use of a hydraulic arrangement according to any one of claims 8 to 16, wherein each hydraulic cylinder (11,11a) is used as a respective said pitch-actuator to hydraulically control the pitch of a respective blade (61,62,63).

31. A hydraulic cylinder substantially as hereinbefore described with reference to and as shown in figures 2 to 7 of the accompanying drawings.

32. A hydraulic arrangement substantially as hereinbefore described with reference to and as shown in figures 4, 5, 9, 10 and 12 of the accompanying drawings.

33. A wind or tidal turbine substantially as hereinbefore described with reference to and as shown in figures 8 to 12 of the accompanying drawings.

34. A contra-rotating propfan engine substantially as hereinbefore described with reference to and as shown in figures 13 and 14 of the accompanying drawings.

35. A method of controlling the pitch of a plurality of blades within a turbine rotor or propeller substantially as

hereinbefore described with reference to figure 11 of the accompanying drawings.

Fig.1
Prior Art

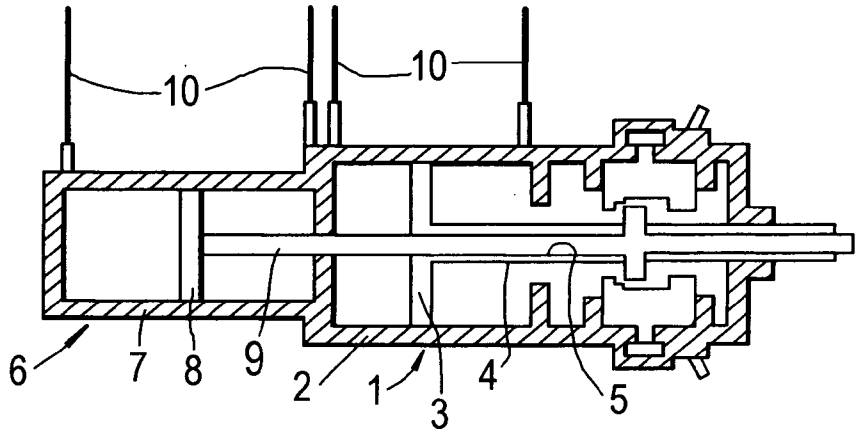

Fig.2

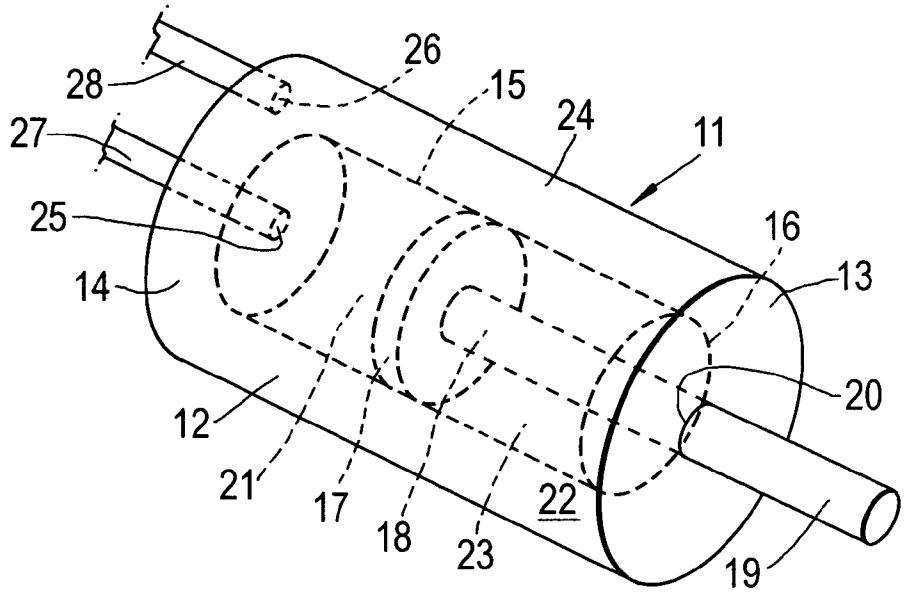

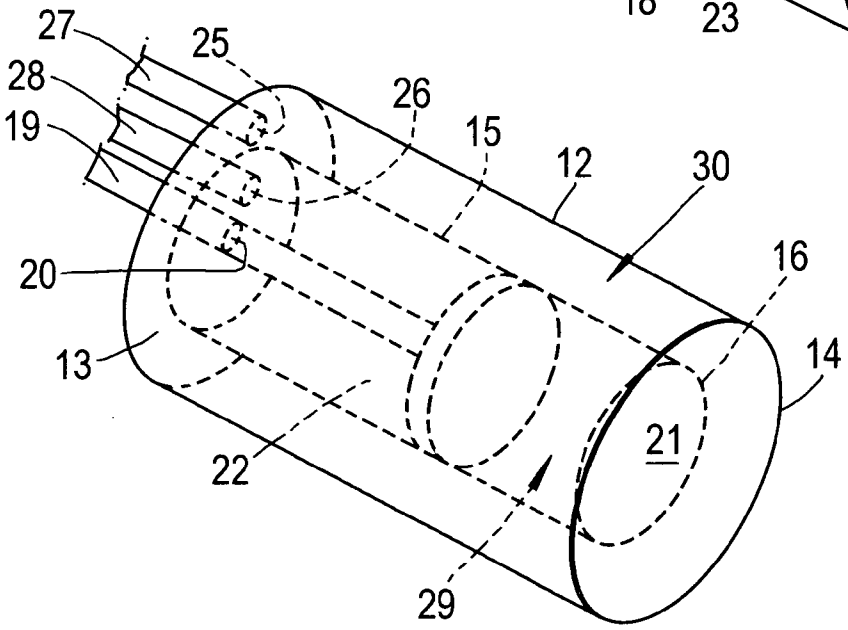

Fig.3

Fig.4

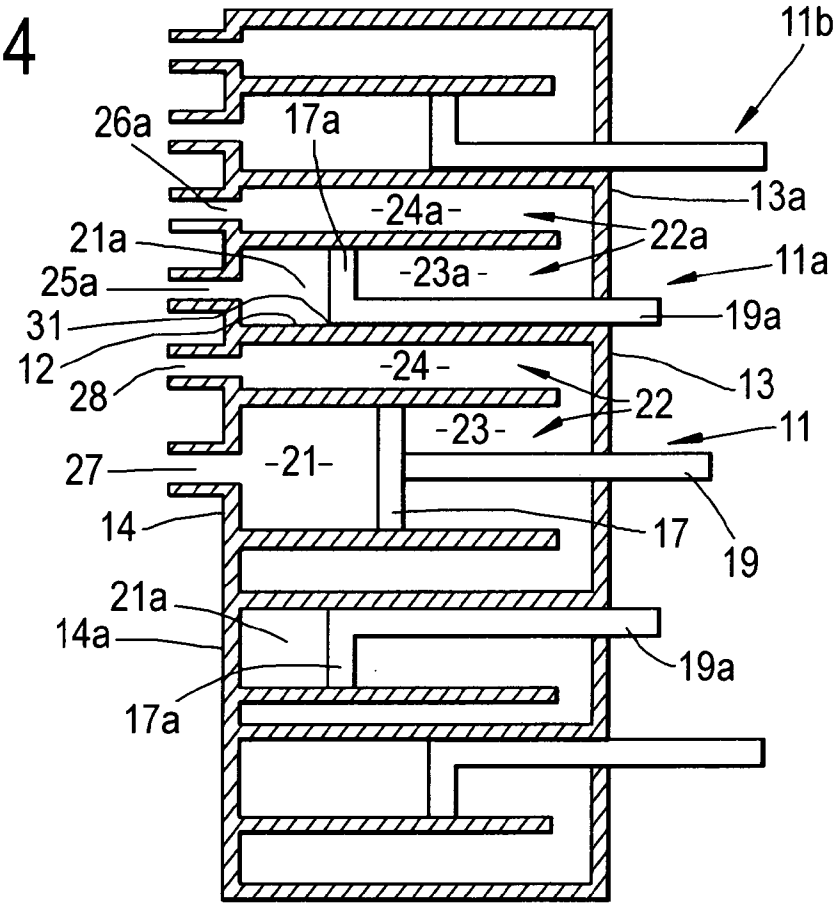
11b
26a
17a
13a
-24a-
22a
21a
-23a-
11a
25a
19a
31
12
-24-
13
28
22
-23-
11
27
-21-
14
17
19
21a
14a
19a
17a

Fig.5

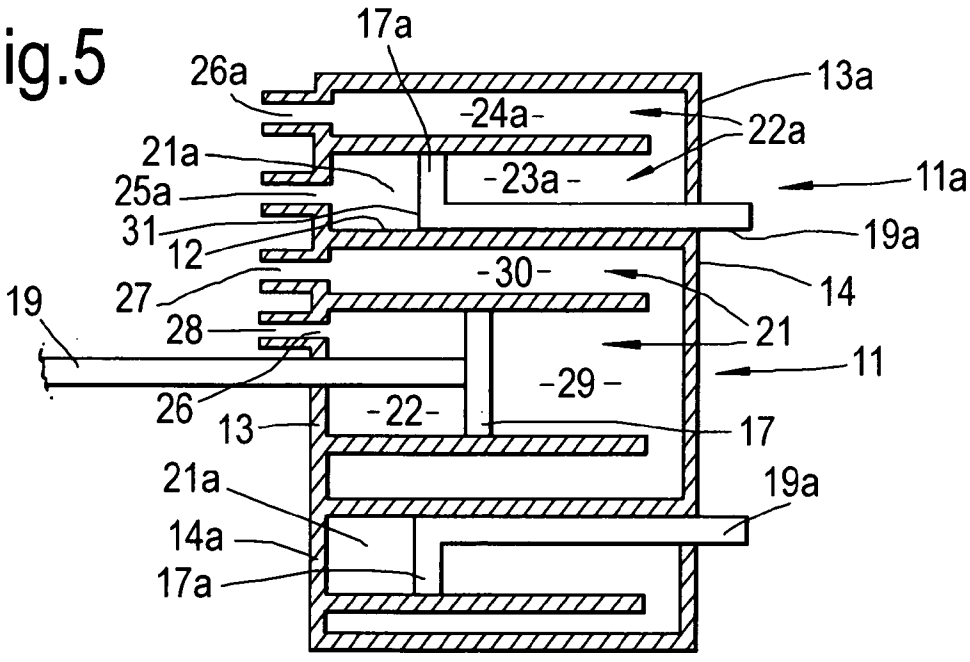
17a
26a
13a
-24a-
22a
21a
-23a-
11a
25a
19a
31
12
-30-
14
27
19
28
21
11
-29-
26
13
-22-
17
21a
19a
14a
17a

Fig.6

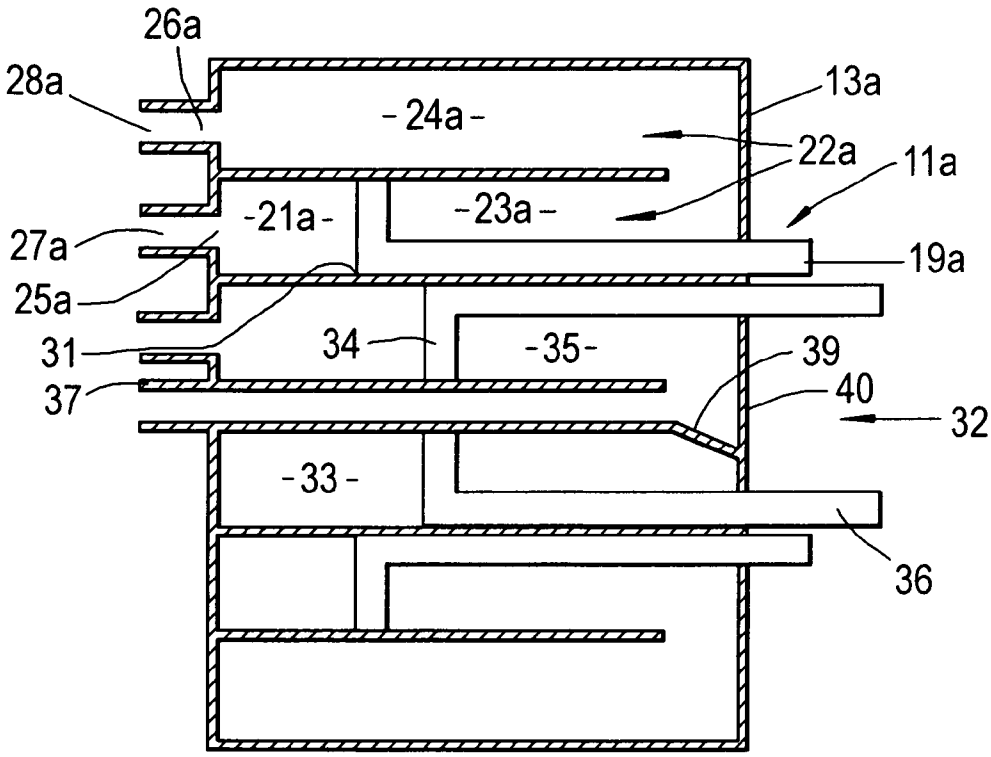
26a
28a
-24a-
13a
22a
11a
-21a-
-23a-
27a
19a
25a
31
34
-35-
39
37
40
32
-33-
36

Fig.7

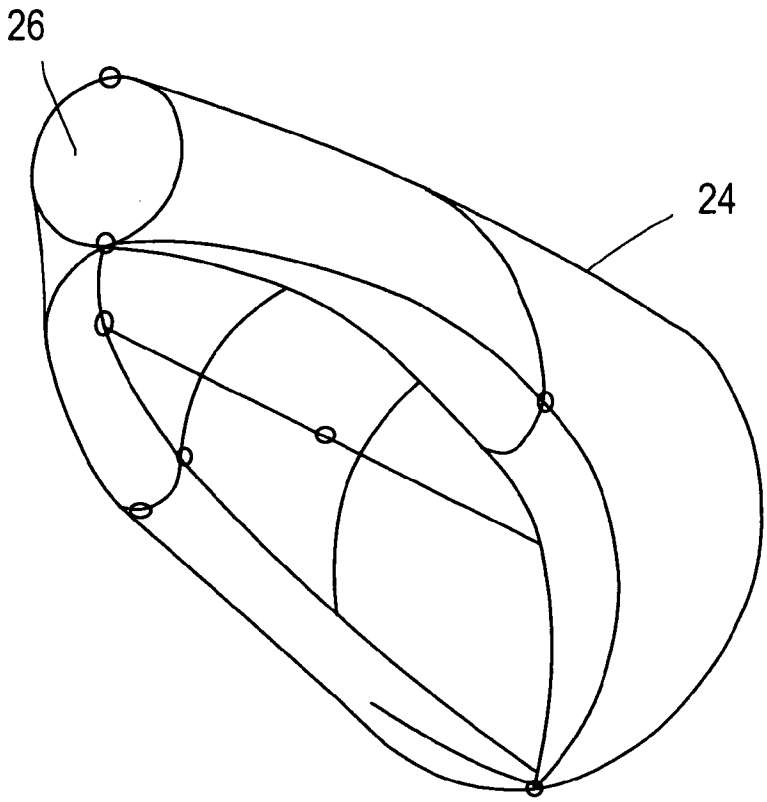

Fig.8

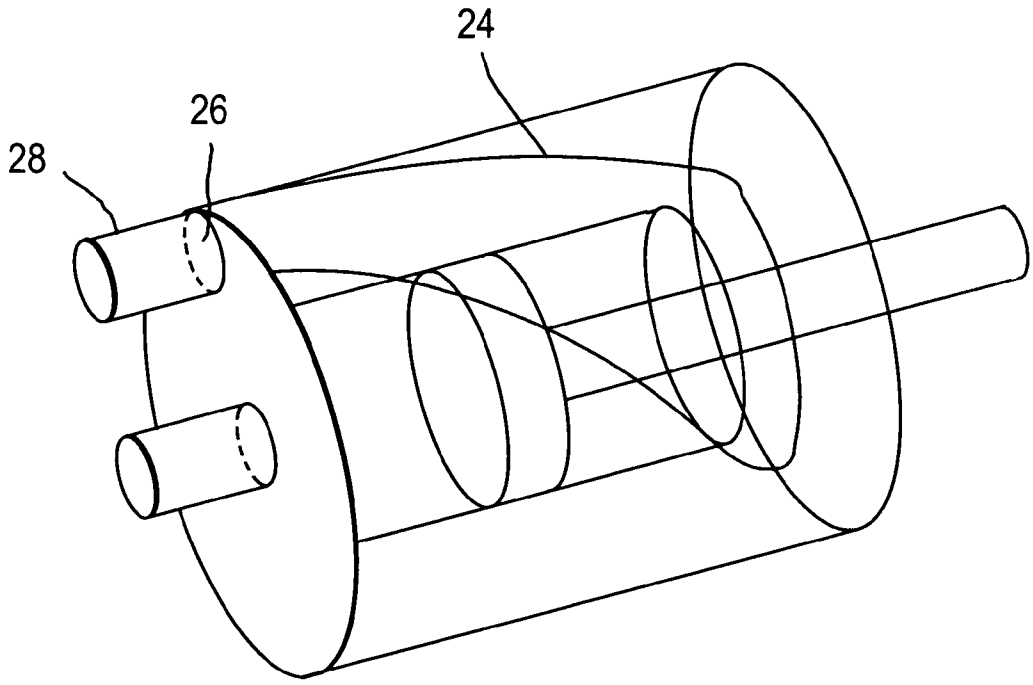

Fig.9

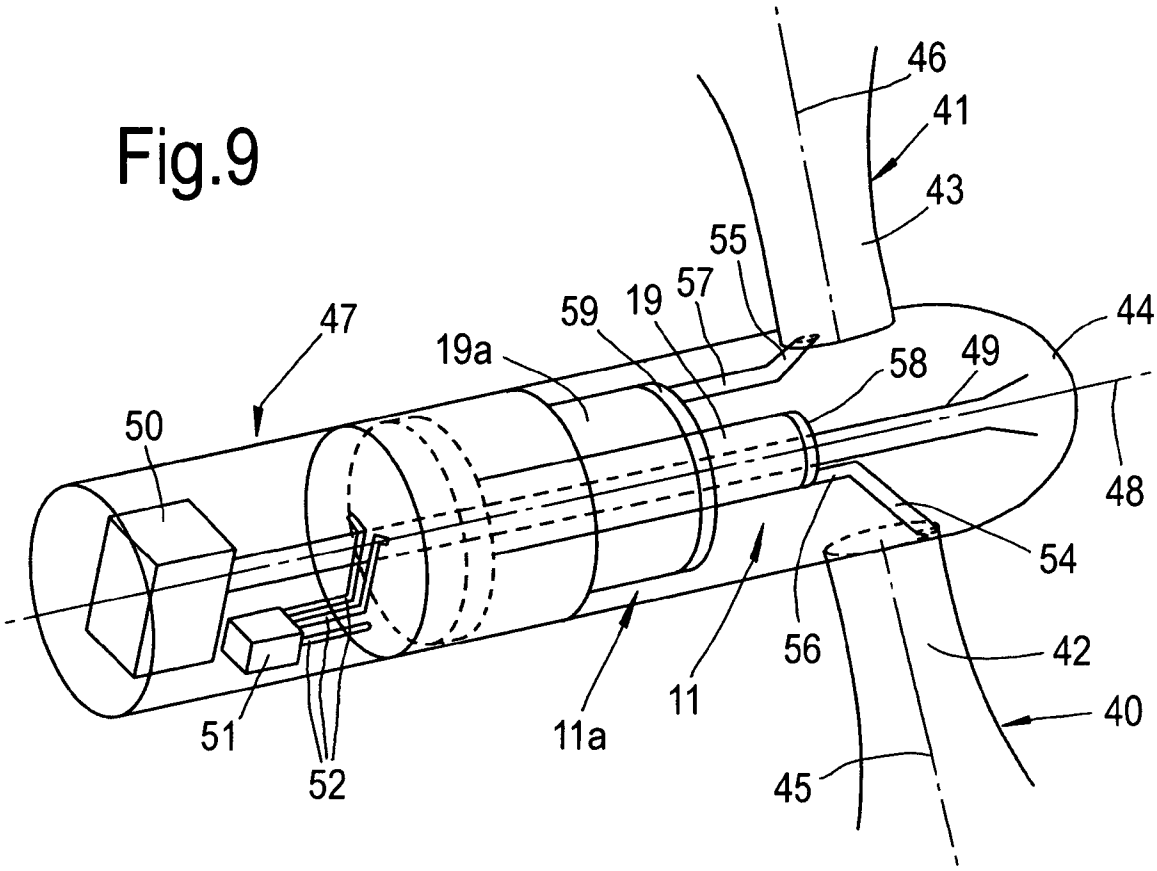
46
41
43
55
57
59
19
47
19a
44
58
49
50
48
54
56
42
11
40
11a
51
52
45

Fig.10

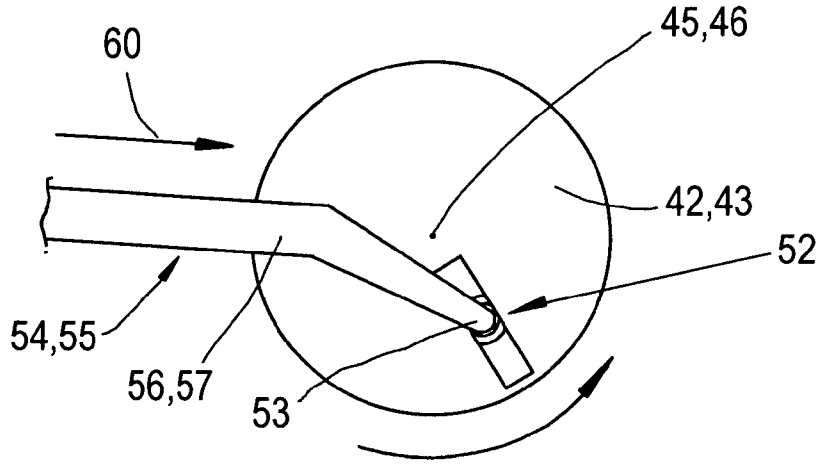
60
45,46
42,43
52
54,55
56,57
53

Fig.11

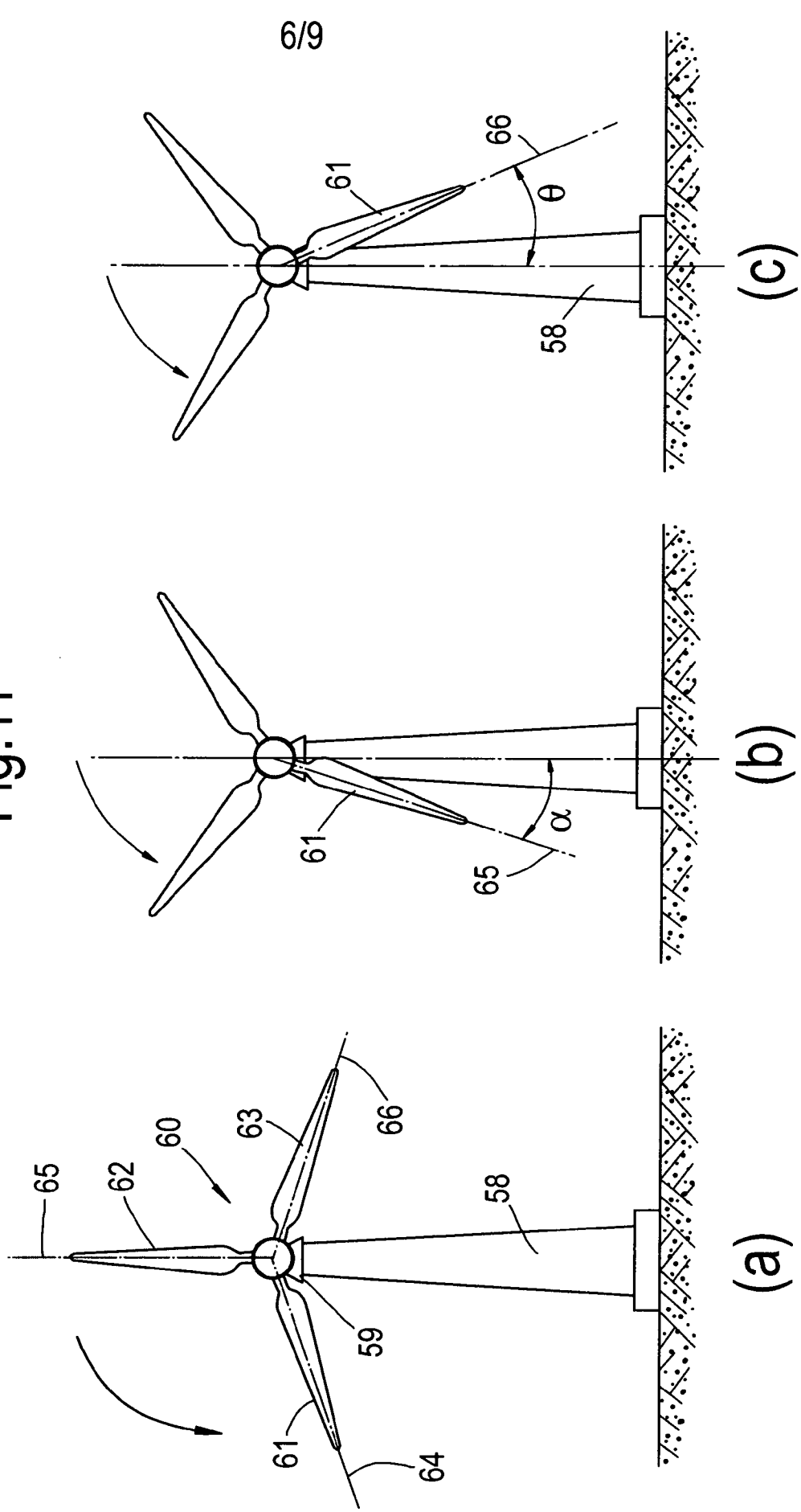

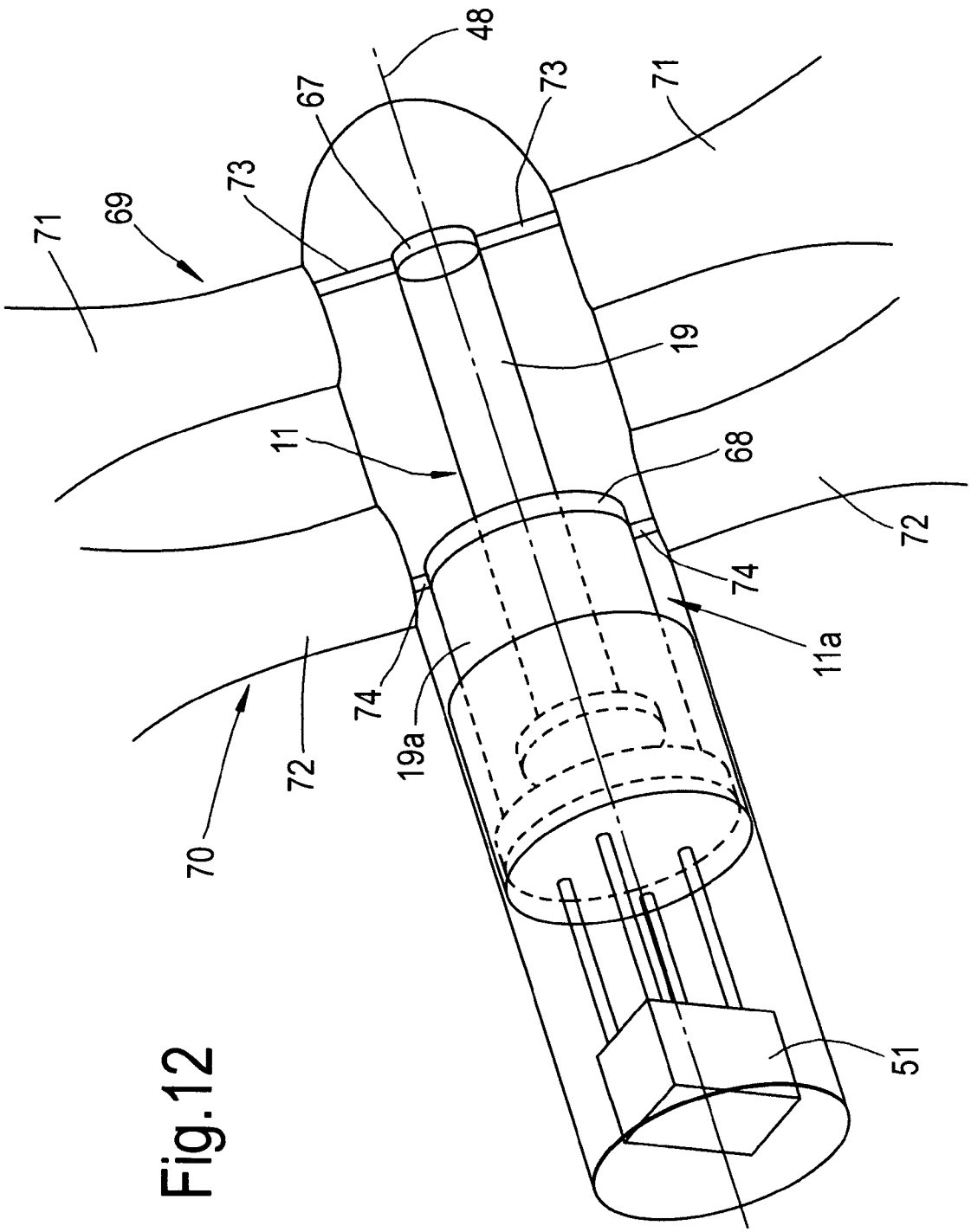

Fig.12

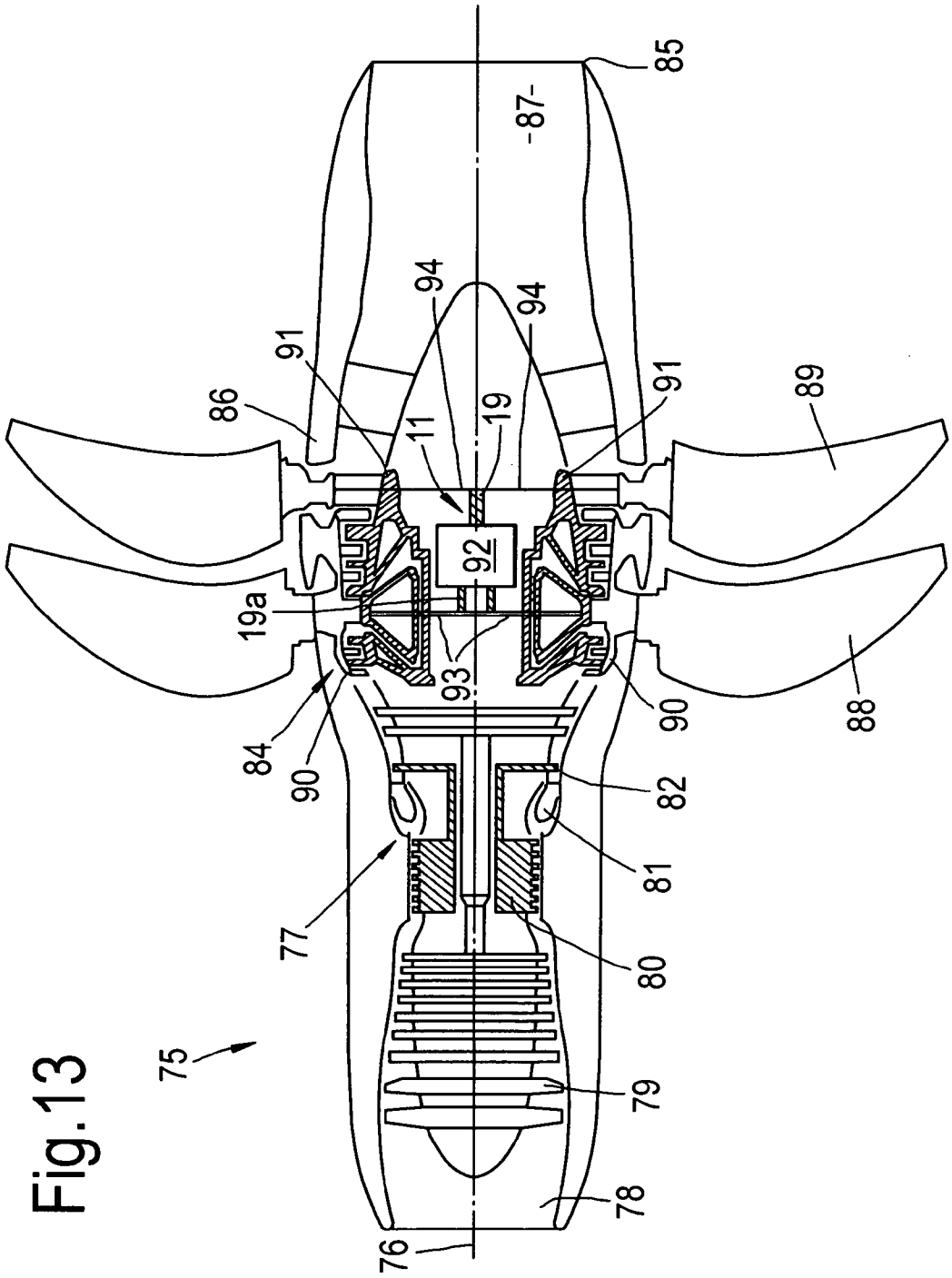
85
-87-
94
94
91
91
86
11
19
89
92
19a
93
84
90
90
88
82
81
77
80
75
79
78
76

Fig.13

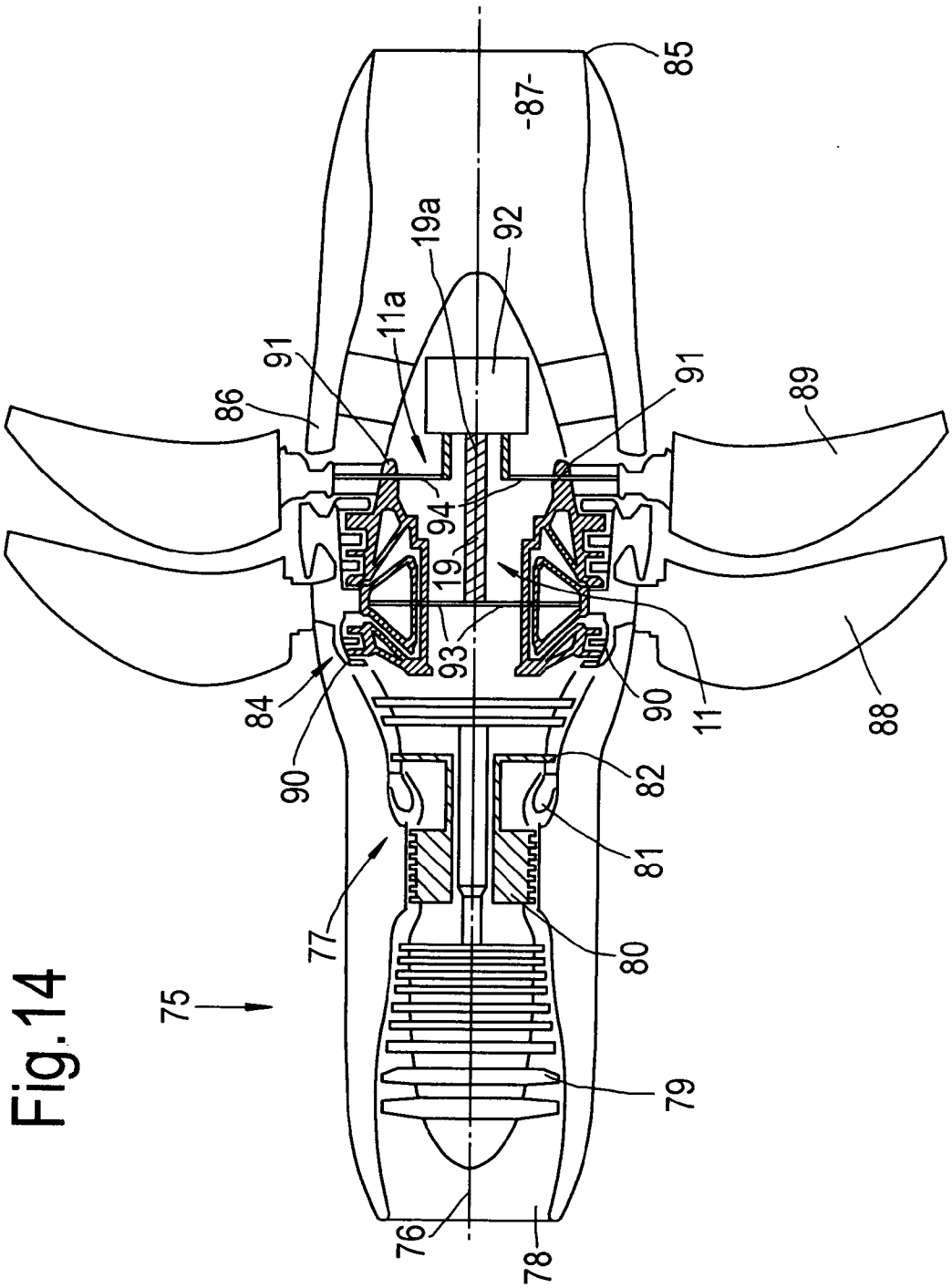
85
-87-
19a
92
11a
91
91
86
89
94
19
93
84
90
11
88
90
82
81
77
80
75
79
76
78

Fig.14

INTERNATIONAL SEARCH REPORT

International application No
PCT/EP2009/005999

A. CLASSIFICATION OF SUBJECT MATTER
INV. F15B15/14 F03D7/02

According to International Patent Classification (IPC) or to both national classification and IPC

B. FIELDS SEARCHED

Minimum documentation searched (classification system followed by classification symbols)
F15B F03D

Documentation searched other than minimum documentation to the extent that such documents are included in the fields searched

Electronic data base consulted during the international search (name of data base and, where practical, search terms used)
EPO-Internal

C. DOCUMENTS CONSIDERED TO BE RELEVANT

Category*	Citation of document, with indication, where appropriate, of the relevant passages	Relevant to claim No.
X	GB 749 564 A (DOUGLAS FRASER & SONS LTD) 30 May 1956 (1956-05-30) page 2, lines 61-97; figures 1-4	1-7,31, 32
A		30
X	WO 91/13791 A1 (ZAHNRADFABRIK FRIEDRICHSHAFEN [DE]) 19 September 1991 (1991-09-19)	1-3,6, 31-32
A	page 4, lines 20-33; figure 2	30
X	DE 197 39 164 A1 (INST SOLARE ENERGIEVERSORGUNGS [DE]) 4 March 1999 (1999-03-04)	33
A	claims 1-7; figures 1,2,6,7	30

-/--

[X] Further documents are listed in the continuation of Box C.

[X] See patent family annex.

* Special categories of cited documents :

"A" document defining the general state of the art which is not considered to be of particular relevance

"E" earlier document but published on or after the international filing date

"L" document which may throw doubts on priority claim(s) or which is cited to establish the publication date of another citation or other special reason (as specified)

"O" document referring to an oral disclosure, use, exhibition or other means

"P" document published prior to the international filing date but later than the priority date claimed

"T" later document published after the international filing date or priority date and not in conflict with the application but cited to understand the principle or theory underlying the invention

"X" document of particular relevance; the claimed invention cannot be considered novel or cannot be considered to involve an inventive step when the document is taken alone

"Y" document of particular relevance; the claimed invention cannot be considered to involve an inventive step when the document is combined with one or more other such documents, such combination being obvious to a person skilled in the art.

"&" document member of the same patent family

Date of the actual completion of the international search	Date of mailing of the international search report
20 November 2009	22/01/2010

Name and mailing address of the ISA/	Authorized officer
European Patent Office, P.B. 5818 Patentlaan 2 NL – 2280 HV Rijswijk Tel. (+31-70) 340-2040, Fax: (+31-70) 340-3016	Rechenmacher, M

INTERNATIONAL SEARCH REPORT

International application No
PCT/EP2009/005999

C(Continuation). DOCUMENTS CONSIDERED TO BE RELEVANT

Category*	Citation of document, with indication, where appropriate, of the relevant passages	Relevant to claim No.
X	DE 39 05 282 C1 (KASTENS, KARL) 31 May 1990 (1990-05-31) abstract column 1, lines 3-25; claim 1; figures 1,2	34
X	WO 2008/100157 A1 (HYDRA TIDAL ENERGY TECHNOLOGY [NO]; HENRIKSEN SVEIN DAG [NO]) 21 August 2008 (2008-08-21) page 3, line 17 - page 4, line 3; figure 1	33

INTERNATIONAL SEARCH REPORT

International application No.
PCT/EP2009/005999

Box No. II Observations where certain claims were found unsearchable (Continuation of item 2 of first sheet)

This international search report has not been established in respect of certain claims under Article 17(2)(a) for the following reasons:

1. ☐ Claims Nos.:
because they relate to subject matter not required to be searched by this Authority, namely:

2. ☐ Claims Nos.:
because they relate to parts of the international application that do not comply with the prescribed requirements to such an extent that no meaningful international search can be carried out, specifically:

3. ☐ Claims Nos.:
because they are dependent claims and are not drafted in accordance with the second and third sentences of Rule 6.4(a).

Box No. III Observations where unity of invention is lacking (Continuation of item 3 of first sheet)

This International Searching Authority found multiple inventions in this international application, as follows:

see additional sheet

1. ☐ As all required additional search fees were timely paid by the applicant, this international search report covers all searchable claims.

2. ☐ As all searchable claims could be searched without effort justifying an additional fees, this Authority did not invite payment of additional fees.

3. ☐ As only some of the required additional search fees were timely paid by the applicant, this international search report covers only those claims for which fees were paid, specifically claims Nos.:

4. ☒ No required additional search fees were timely paid by the applicant. Consequently, this international search report is restricted to the invention first mentioned in the claims; it is covered by claims Nos.:

1-25, 30-34

Remark on Protest

☐ The additional search fees were accompanied by the applicant's protest and, where applicable, the payment of a protest fee.

☐ The additional search fees were accompanied by the applicant's protest but the applicable protest fee was not paid within the time limit specified in the invitation.

☐ No protest accompanied the payment of additional search fees.

FURTHER INFORMATION CONTINUED FROM PCT/ISA/ 210

This International Searching Authority found multiple (groups of) inventions in this international application, as follows:

1. claims: 1-25, 30-34

   Hydraulic cylinder and hydraulic arrangement or wind or tidal turbine or propfan with said hydraulic cylinder and method involving the use of the hydraulic arrangement.

   ---

2. claims: 26-29, 35

   Method of controlling the pitch of a plurality of rotor blades

   ---

INTERNATIONAL SEARCH REPORT

Information on patent family members

International application No
PCT/EP2009/005999

Patent document cited in search report	Publication date	Patent family member(s)	Publication date
GB 749564 A	30-05-1956	NONE	
WO 9113791 A1	19-09-1991	EP 0518922 A1	23-12-1992
		ES 2050536 T3	16-05-1994
		RU 2068120 C1	20-10-1996
DE 19739164 A1	04-03-1999	DE 29715249 U1	24-12-1998
DE 3905282 C1	31-05-1990	NONE	
WO 2008100157 A1	21-08-2008	AU 2008215210 A1	21-08-2008
		CA 2678060 A1	21-08-2008
		EP 2118482 A1	18-11-2009
		NO 327567 B1	17-08-2009