May 18, 1965 M. T. PHELPS 3,183,550

COUNTERBALANCE HINGE

Filed Oct. 21, 1963 2 Sheets-Sheet 1

Fig. 1.

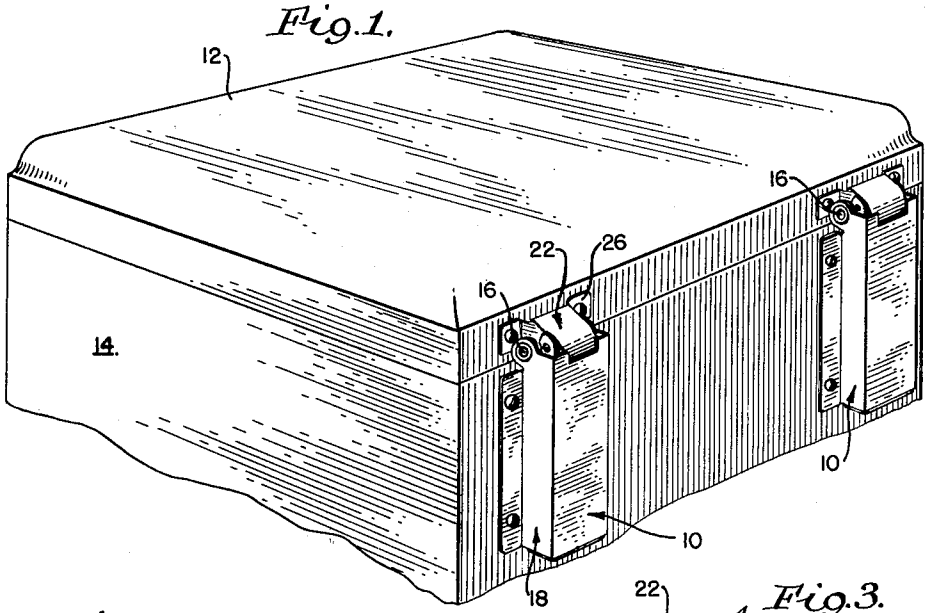

Fig. 2.

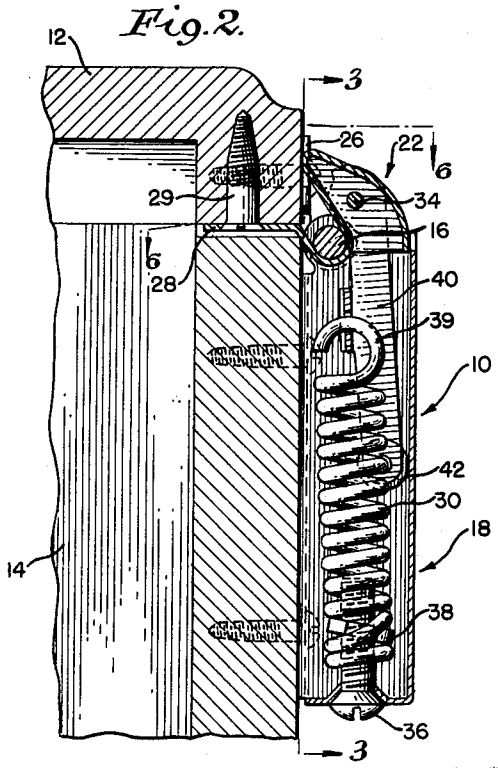

Fig. 3.

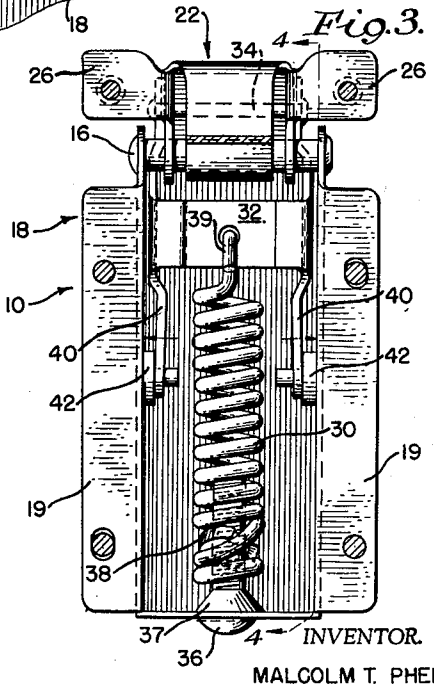

INVENTOR.
MALCOLM T. PHELPS

BY

Bean, Brooks, Buckley & Bean
ATTORNEYS

May 18, 1965 M. T. PHELPS 3,183,550

COUNTERBALANCE HINGE

Filed Oct. 21, 1963 2 Sheets-Sheet 2

Fig. 4.

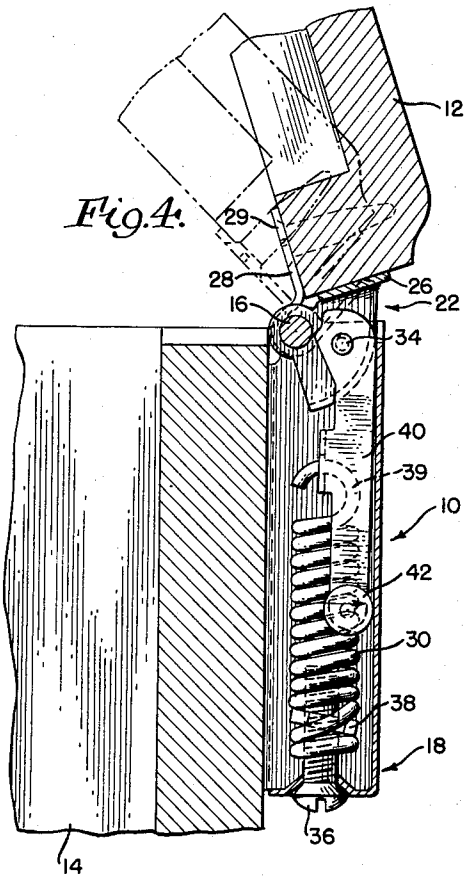

Fig. 5.

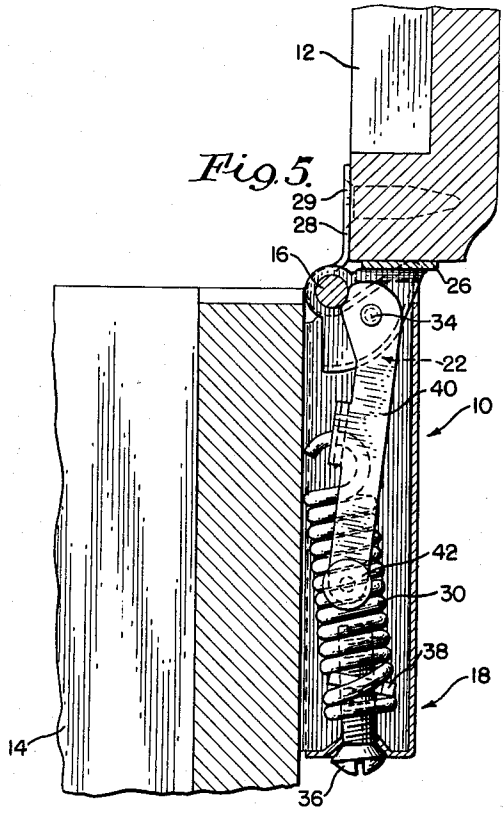

Fig. 7.

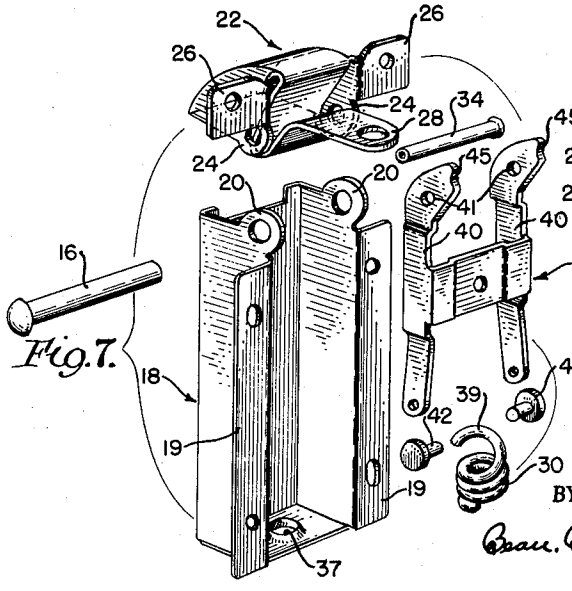

Fig. 6.

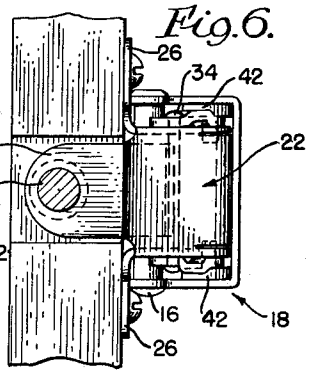

INVENTOR.
MALCOLM T. PHELPS

BY

Beau, Brooks, Buckley & Beau
ATTORNEYS

United States Patent Office 3,183,550 Patented May 18, 1965

3,183,550

COUNTERBALANCE HINGE

Malcolm T. Phelps, Jamestown, N.Y., assignor to Weber-Knapp Company, Jamestown, N.Y.

Filed Oct. 21, 1963, Ser. No. 317,733
8 Claims. (Cl. 16—190)

This invention relates to an improved counterbalance type hinge mechanism for pivotally supporting and balancing and otherwise positionally controlling the lid or cover of an open top type cabinet or the like; the lid being thereby adapted to swing between substantially horizontal and vertically standing positions. Thus, the invention relates more specifically to motion control hinge mechanisms such as are useful for example in connection with top covers of record player cabinets, freezer cabinet, filing cabinets, or other receptacles having hinged covers or lids swingable from horizontal "closed" positions to vertically standing "open" positions.

It is a primary object of the present invention to provide an improved motion controlling hinge device as aforesaid which will effectively counterbalance the weight of a cover or lid member throughout the operative arc of its movement; automatically compensating for the variable torque (due to gravity) effects on the cover as it swings between horizontally extending and vertically standing attitudes.

Another object of the invention is to provide a hinge mechanism as aforesaid which is of structurally simple and compact form; the parts of which are rugged and fail-proof in operation and yet which may be relatively inexpensively fabricated.

Another object of the invention is to provide an improved hinge mechanism as aforesaid which is adapted to be mounted on the outside of the cabinet back wall and below the level of the cabinet top surface, thereby leaving the interior of the cabinet totally unobstructed while still being inconspicuous from positions from which the cabinet is usually viewed.

Another object is to provide an improved hinged mechanism as aforesaid which may be readily adjusted to adapt it to operate to provide improved counterbalancing effects in connection with cabinet covers of various weights and dimensions.

Another object is to provide an improved hinge mechanism as aforesaid having a range of action enabling the mounted cover to be swung between horizontal and fully vertically standing positions.

Another object is to provide in a hinge mechanism as aforesaid improved means for cushioning and damping the cover movement as it swings towards a vertically standing position, whereby to slow down cover movements and for example to prevent upward "whipping" of the cover when released after manual starting of a cover opening operation.

Another object is to provide in a hinge mechanism as aforesaid an improved motion braking means.

Another object is to provide in a mechanism as aforesaid an improved counterbalance spring arrangement, including mechanical advantage varying means coming automatically into operation to compensate for varying torque loads (due to gravity effects) on the cover.

Another object is to provide in a mechanism as aforesaid a novel friction-brake applying mechanism variably operable to compensate for torque variations (due to gravity effect changes) on the cover as it moves between horizontal extending and vertically standing positions.

Other objects and advantages of the invention will appear from the specification hereinafter and the accompanying drawing wherein:

FIG. 1 is a fragmentary top perspective view of a cabinet having its cover mounted thereon by means of a pair of hinges of the present invention;

FIG. 2 is a fragmentary vertical sectional view, on enlarged scale, through one of the hinges of FIG. 1;

FIG. 3 is a section taken on line 3—3 of FIG. 2;

FIGS. 4, 5 are views corresponding to FIG. 2 but showing the hinge parts when the cabinet cover is in various "open" positions;

FIG. 6 is a fragmentary sectional view taken on line 6—6 of FIG. 2; and

FIG. 7 is an "exploded" view in perspective of the parts of the hinge mechanism.

As shown in the drawing herewith, a pair of hinges embodying the invention; being individually indicated generally at 10—10, FIG. 1, are employed to mount a cover 12 relative to a cabinet 14; it being understood of course that only one, or any other number of such hinges, may be employed to provide proper hinging support for a cabinet cover depending upon its weight and/or dimensional characteristics. The hinge or hinges, as the case may be, are adapted to be mounted against the rear wall of the cabinet and against the rear edge of the cover, so as to be thereby unobtrusively disposed from view such as when the cabinet is customarily placed against or adjacent a room wall surface or the like. Hence, when the cover is raised to its full open position as illustrated for example at FIG. 5, access to the interior of the cabinet is completely unobstructed by the presence of any hinge parts. This is an important feature in connection with many cabinet-cover arrangements, such as for example in record player cabinets, or the like. Also the hinge mechanism of the present invention is of such compact dimensional form as to be adequately accommodated in the space between the cabinet and the adjacent wall which is required to permit raising of the cabinet cover to its fully vertical standing position. Hence, mounting of the hinge mechanism of the present invention on the outside of the cabinet rear wall is of no detriment, and per se requires no positional shifting of the cabinet relative to the adjacent wall.

As shown by way of example herein, the mechanism of the present invention comprises a pair of relatively pivotable bracket portions interconnected by means of a hinge pin 16. One of the bracket portions comprises a generally channel-shaped housing member 18 adapted to be fixed as by means of wood screws or the like; in vertically standing attitude against the wall of the cabinet; having apertured side flanges 19—19 for that purpose. The side walls of the bracket 18 are formed at their upper ends with eye portions 20—20 accommodating the pin 16. The second bracket portion comprises a metal stamping as indicated generally at 22, having parallel eye portions 24—24 suitably apertured to also accommodate the pin 16 therethrough; whereby the parts 18, 22, are interconnected in hinged relation. The bracket 22 is also formed with a pair of apertured side flanges 26—26 for fastening the bracket to the rear edge of the cabinet cover 12. The member 22 also preferably includes a forwardly extending tab 28 which is apertured to accommodate a wood screw 29 or the like for additional fastening of the device to the underside of the cabinet cover. Thus it will be appreciated that by reason of this arrangement the cover 12 is mounted to pivot relative to the open top of the cabinet 14 between horizontally extending "closed" position and either partial or "full open" positions, such as when the cover is in its fully vertical extending position.

To counterbalance the weight of the cover to which the hinge mechanism is attached, a tension spring 30 is provided to connect at its lower end with the bottom portion of the bracket housing 18, and at its upper end with a yoke 32 which suspends pivotally from a pin 34 carried

by the top bracket member 22. To provide for tension adjustments of the spring 30 it is connected at its lower end to the bracket 18 by means of a screw 36, the head of which is journaled in a beveled apertured portion 37 formed in the bottom plate of the bracket 18 to permit the screw 36 to rock slightly in its anchor. The screw 36 is threaded through a flat nut 38 which is slip-fitted between convolutions of the spring adjacent its lower end, whereby to operatively connect the screw 36 and the spring 30. At its upper end the spring 30 is provided with a portion 39 which hooks through an aperture in the yoke 32 as shown in the drawing herewith.

The yoke 32 includes a pair of generally parallel disposed side legs 40—40 which are apertured at their upper ends as indicated at 41 (FIG. 7) to accommodate therethrough the transverse pin 34, thus "hanging" the yoke 32 on the pin 34 which in turn is carried by the bracket member 22 at a side view position offset from the center of rotation of the member 22 about the axis of the main hinge pin 16. At their lower ends the yoke leg portions 40—40 are apertured to accommodate mounting thereon of friction-brake buttons or "shoes" as indicated at 42—42, the heads of which are thereby arranged to bear flatwise against the inner side wall portions of the bracket housing 18. The spring characteristics of the legs 40—40 hold the brake shoe buttons 42—42 in friction-bearing relation against the bracket side walls. Note also, that as shown in FIG. 4, the heads of the buttons 42—42 bear edgewise against the back wall of the bracket 18 to avoid any metal-to-metal chaffing as the mechanism operates.

The parts are so dimensioned and arranged that when the cover is down, as shown in FIG. 2, the yoke 32 is pulled upon upwardly so as to elongate the spring 30 into the range of its high-tensioned condition. Thus, the spring 30 is now exerting maximum pull downwardly through the yoke and upon the pin 34, tending to rotate the hinge bracket 22 about the main hinge pin 16 so as to effectively counterbalance the gravity effects upon the cover 12 when in its horizontal position. Hence, the cover may now be easily lifted by application of only slight manual pressures against the front edge of the cover, for access to the cabinet interior. As the cover is first moved upwardly, such as through the first 45 degrees of its opening are, the yoke hanger pin 34 swings in an arc behind the hinge pin 16 as from the position of FIG. 1 to the position of FIG. 4, thereby substantially reducing the distance between the pin 34 and the anchorage of the screw 36 at the bottom of the housing 18. This relaxes the spring and reduces the tension forces being applied by the spring for counterbalancing the gravity forces on the cover; but inasmuch as the cover is now swinging towards an upwardly standing position about the hinge pin 16, the torque forces thereon (due to gravity) are now decreasing progressively as the cover approaches its fully upright position. Thus, when the cover reaches a truly vertical standing attitude as shown for example in FIG. 5, the distance between the hanger pin 34 and the anchor point of the screw 36 is minimum; and the screw 36 is preferably adjusted so that under this condition the spring exerts only low tension forces on the hanger pin 34. Throughout the entire range of cover movements the friction buttons 42 oppose tendencies of the cover to "coast" after being manually set into motion. Thus the cover will stop at the intended position.

It is a particular feature of the mechanism of the invention that the upper ends of the yoke legs 40—40 are formed with concave dwell portions designated 45—45 (FIG. 7); and the parts are so arranged that after the mechanism passes the positions shown in FIG. 4 and attains for example an approximately 85° upstanding position, the concave surfaces 45—45 cam into seated positions against the hinge pin 16 as shown in FIG. 5. The member 22 and the yoke 32 are thus effectively locked together to now rotate as a stiff-arm unit about the axis of the hinge pin 16. This forces the lower

ends of the yoke legs to move laterally and inwardly toward the back wall of the cabinet, as from the position shown in FIG. 4 to the position shown in FIG. 5. The friction pads 42—42 are thereby displaced in substantially horizontal directions, and their resistance to this motion is applied through the yoke legs 40—40 in such manner as to resist rotation of the temporarily locked together unit about the hinge pin 16. The effective lever arm length through which the friction pads 42 now operate is the vertical distance between the axis of the pin 16 and the pads 42—42. Thus, as the cover finally settles into its vertically standing attitude the friction brake effects of the pads 42—42 are supplemented by a lever arm multiplication which produces a many times greater frictional effect. This augmentation of the braking effect operates to prevent "coasting" and to cushion the arrival of the cover to its full open position, and prevents sudden stops and consequent stresses upon the hinge fasteners. This action also damps out any tendency of the cover to oscillate when it is in its upright standing position. In addition, it should be noted that after locking together of the member 22 and the yoke 32, the further upward movement of the cover operates to displace the top end of the spring 30 horizontally, thereby acting counter to the spring relaxation effect and causing the spring to now become slightly elongated; thereby introducing an increasing spring force which augments the cushioning effect which was previously referred to. As shown in FIG. 2, the parts are so proportioned and arranged that as the cover springs down towards its fully closed position, the hanger pin 34 moves so as to reduce the effective lever arm through which the spring is acting. Therefore, although the spring is now under maximum tension, it is less effective in supporting the cover whereby the latter is permitted to fall through the last few degrees of its travel arc into firmly pressed relation against the cabinet. Thus, substantially the full weight of the cover is now acting to maintain the cover closed so that it is thereby prevented from noisily vibrating against the cabinet, such as might otherwise occur under the influence of cabinet vibrations, induced by audio speakers, floor movements, or the like.

Ajustments of the spring anchor screw 36 will of course adapt the mechanism to properly control the movements of covers of different weights and/or dimensions. Thus, when applied to heavier covers, for example, and/or to covers of greater depth dimensions, whereby gravity-induced torque loads thereon are heavier, the spring 30 will be more highly tensioned; and incidental to the final movement of the cover into full open position the horizontal deflection of the top end of the spring as explained hereinabove will provide a proportionately greater (and needed) cushioning effect.

Thus, the mechanism of the invention provides a plurality of improved and highly desirable operational features, some of which are quite unobvious until explained as hereinabove. It will of course be appreciated that although only one specific form of the invention has been illustrated and described in detail herein, various changes may be made in the mechanism shown and described by way of example, without departing from the spirit of the invention or the scope of the following claims.

I claim:

1. A combination hinge and counterbalance mechanism for mounting a cover upon an open top cabinet whereby said cover may be easily swung between horizontal and vertically standing attitudes, said mechanism including first and second brackets adapted to be fixed to said cabinent and said cover respectively and a hinge pin pivotally interconnecting said brackets, link means pivotally connected at one end to one of said brackets at a position radially offset from the axis of said hinge pin, a tension spring connected at one end to said link means and attached at its other end to the other of said

brackets, thereby exerting upon said link means a force counterbalancing the torque effects of gravity on said cover, a friction brake shoe carried by said link means at a position radially offset from the axis of said hinge pin by an amount greater than the aforesaid radial spacing between said link means connection and said hinge pin and bearing in frictional engagement with a flat wall portion of said other of said brackets, said link means having a concave-shaped nose portion extending radially from the axis of pivotal connection of said link means to said one bracket and so directed that when the cover reaches an approximately 85 degree "open" position said nose portion locks upon said hinge pin and rigidifies said link means and said one bracket as a unit to thenceforth rotate about the axis of said hinge pin thereby sweeping said brake shoe about the axis of said hinge pin through a relatively long lever arm throughout the upper range of the arc of movement of said cover.

2. A combination hinge and counterbalance mechanism for mounting a cover upon an open top cabinet whereby said cover may be easily swung between horizontal and vertically standing attitudes, said mechanism including first and second bracket members adapted to be fixed to said cabinet and said cover respectively, a hinge pin pivotally interconnecting said bracket members, link means pivotally connected at one end to one of said bracket members at a position radially offset from the axis of said hinge pin, a tension spring connected at one end to said link means and attached at its other end to the other of said bracket members, and adjusted to exert forces upon said link means counterbalancing the torque effects of gravity on said cover, a friction brake means carried by said link means at a position radially offset from the axis of said hinge pin by an amount greater than the aforesaid radial spacing between said link means connection and said hinge pin and bearing in frictional engagement with a flat wall portion of the other of said bracket members, said link means having a nose portion extending radially from the axis of pivotal connection of said link means to said one bracket member and arranged so that when the cover reaches an approximately 85 degree "open" position said nose portion bears against said hinge pin and thereby rigidifies said link means and said one bracket member as a unit to thenceforth rotate about the axis of said hinge pin and to sweep said brake means about the axis of said hinge pin and thereby causing it to act through a relatively long lever arm throughout the remainder of the upper range of the arc of movement of said cover.

3. A combination hinge and counterbalance mechanism for mounting a cover upon an open top cabinet whereby said cover may be easily swung between horizontal and vertically standing attitudes, said mechanism including first and second bracket members adapted to be fixed to said cabinet and said cover respectively, a hinge pin pivotally interconnecting said bracket members, an elongate link means pivotally connected at one end to one of said bracket members, at a position radially offset from the axis of said hinge pin, a tension spring connected at one end to an upper portion of said link means and attached at its other end to the other of said bracket members and adjusted to exert forces upon said link means counterbalancing the torque effects of gravity on said cover, a friction brake shoe carried by a lower portion of said link means at a position radially offset from the axis of said hinge pin by an amount greater than the aforesaid radial spacing between said link means connection and said hinge pin and bearing in frictional engagement with a flat wall portion of the other of said bracket members, said link means having an abutment portion extending radially from the axis of pivotal connection of said link means to said one bracket member and disposed so that when the cover reaches a predetermined position just ahead of its fully "open" position said abutment portion bears against said hinge pin and rigidifies said link means and said one bracket member as a unit to then rotate about the axis of said hinge pin as said cover proceeds towards its full "open" position while sweeping said brake shoe about the axis of said hinge pin and causing it to act through a greatly increased lever arm thereby providing increased motion braking effect as the cover moves towards its full open position.

4. A combination hinge and counterbalance mechanism for mounting a cover upon an open top cabinet whereby said cover may be easily swung between horizontal and vertically standing attitudes, said mechanism including first and second bracket members adapted to be fixed to said cabinet and said cover respectively, a hinge pin pivotally interconnecting said bracket members, an elongate link device pivotally connected at one end to one of said bracket members at a position radially offset from the axis of said hinge pin and connected intermediately of its length to one end of a tension spring, said tension spring being attached at its opposite end to the other of said bracket members and adjusted to exert forces through said link device counterbalancing the torque due to effects of gravity on said cover, friction brake shoe means carried by said link device at its end portion remote from said hinge pin and bearing in frictional engagement with flat surface portions of the other of said brackets at points radially offset from the axis of said hinge pin by an amount greater than the aforesaid radial spacing between said link means connection and said hinge pin, said link device having a nose portion extending from one end thereof and so directed that when said cover approaches its full "open" position said nose portion bears against said hinge pin and thereby rigidifies said link device relative to said first bracket member whereby they continue to rotate as a unit about the axis of said hinge pin, thereby causing said brake shoes means to sweep in an arc about the axis of said hinge pin and hence through a relatively long lever arm as said cover moves into its full "open" position.

5. A combination hinge and counterbalance mechanism for mounting a cover upon an open top cabinet whereby said cover may be easily swung between horizontal and vertical standing attitudes, said mechanism including first and second bracket portions adapted to be fixed to said cabinet and said cover respectively and hinge means pivotally interconnecting said bracket portions, link means pivotally connected at one end to one of said bracket portions at a point radially offset from the axis of said hinge means, a tension spring connected at one end to said link means and attached at its other end to the other of said brackets portions, thereby exerting upon said link means a force counterbalancing the torque effects of gravity on said cover, a friction brake shoe carried by said link means and bearing in frictional engagement with a flat wall portion of the other of said brackets at a point spaced from said axis of the hinge means more remotely than is the point of connection between said link means and said one bracket portion, said link means having a nose portion extending therefrom so that when the cover approaches its fully "open" position said nose portion bears against said hinge means and rigidifies said link means relative to said one bracket portion to thenceupon rotate as a unit about the axis of said hinge means thereby causing said brake shoe to sweep about the axis of said hinge means in response to further rotation of said one bracket portion while acting through a relatively long lever arm throughout the final range of the arc of movement of said cover into full open position.

6. In combination with a cabinet and a closure member therefor, a hinge assembly mounting said closure member on said cabinet for movement between closed and open extreme positions relative thereto; said hinge

assembly including a bracket member fixed to said closure member, a bracket member fixed to said cabinet and pivot means joining said bracket members; and brake means for exerting sudden intensive opposition to movement of said closure member as it is caused to approach one of its extreme positions, said brake means including link means pivotally connected to one of said bracket members, abutment means acting between said link means and said one bracket member for rigidifying said link means and said one bracket member in response to said closure member approaching said one of its extreme positions, and a brake member connected to said link means and engaging the other bracket member.

7. A hinge assembly adapted to mount a closure member on a cabinet for movement between closed and open extreme positions relative thereto, said hinge assembly including a pair of bracket members, means pivotally connecting said bracket members, and brake means for exerting forces opposing movement of a closure member which are of different intensities dependent upon relative positioning between closure member and cabinet, said brake means including link means pivotally connected to one of said bracket members, a brake member connected to said link means and engaging the other bracket member, and abutment means for causing said brake member to move at different rates relative to said other bracket member.

8. In comibnation with a cabinet and a closure member therefor, a hinge assembly mounting said closure member on said cabinet for movement between closed and open extreme positions relative thereto; said hinge assembly including a bracket member fixed to said closure member, a bracket member fixed to said cabinet and pivot means joining said bracket member; and brake means for exerting forces opposing movement of said closure member relative to said cabinet which vary in intensity dependent upon the relative position between said closure member and said cabinet, said brake means including link means pivotally connected to one of said bracket members, a brake member connected to said link means and engaging the other bracket member, and abutment means for causing said brake member to move at different rates relative to said other bracket member in response to uniform rate of movement between said closure member and said cabinet and dependent upon the relative position therebetween.

References Cited by the Examiner

UNITED STATES PATENTS

1,039,588	9/12	Pearson	16—142
2,816,318	12/57	Philipp	16—190
2,911,667	11/59	Burke	16—190
3,091,796	6/63	Leslie	16—142

DONLEY J. STOCKING, *Primary Examiner.*