No. 881,957. PATENTED MAR. 17, 1908.

G. H. RIDLON.

BASE BALL MASK.

APPLICATION FILED OCT. 26, 1907.

2 SHEETS—SHEET 1.

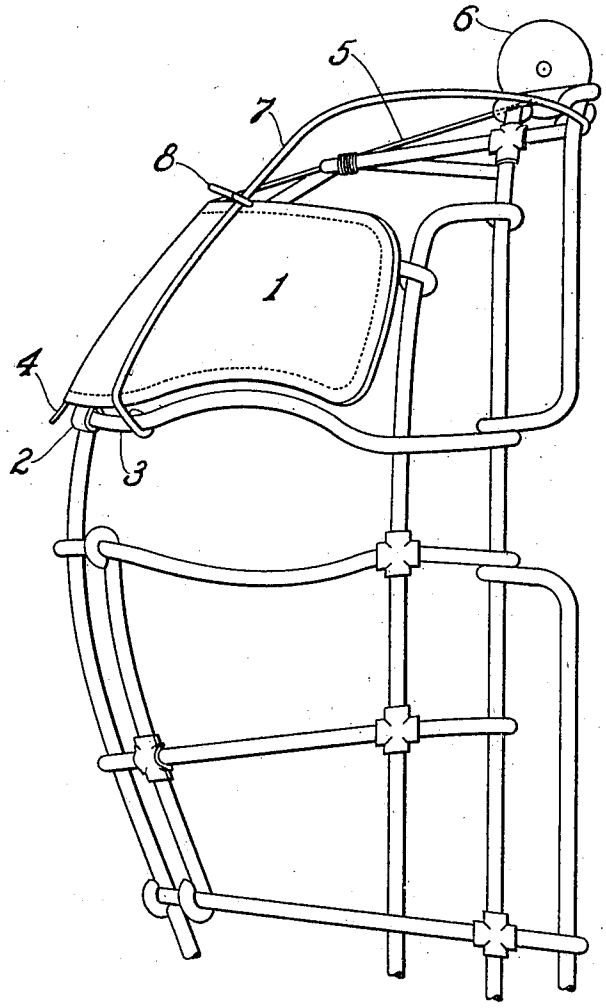

FIG. 1

WITNESSES

Edward S. Day

Annie C. Richardson.

INVENTOR

George H. Ridlon

by his Attorneys

Phillips Van Everen Fisk

THE NORRIS PETERS CO., WASHINGTON, D. C.

No. 881,957. PATENTED MAR. 17, 1908.

G. H. RIDLON.

BASE BALL MASK.

APPLICATION FILED OCT. 26, 1907.

2 SHEETS—SHEET 2.

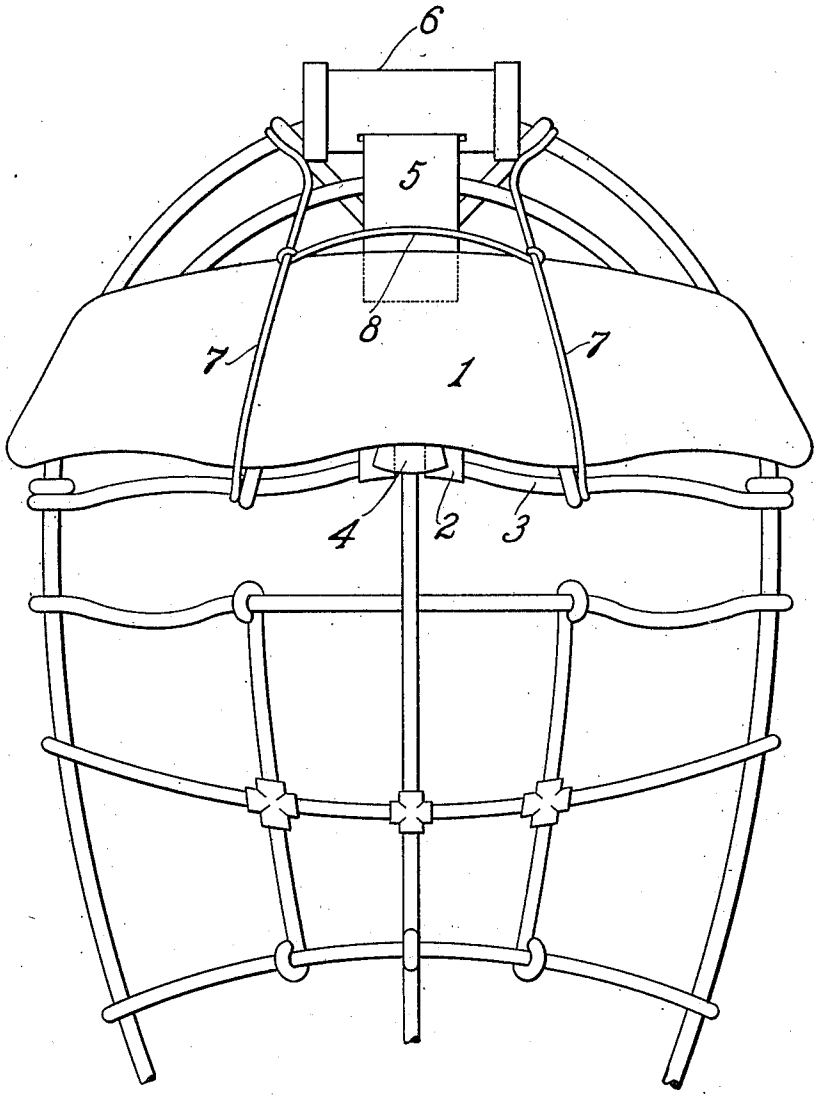

FIG. 2

WITNESSES
Edward S. Day
Annie C. Richardson.

INVENTOR
George H. Ridlon
by his Attorneys
Phillips Van Everen & Fish

THE NORRIS PETERS CO., WASHINGTON, D. C.

UNITED STATES PATENT OFFICE.

GEORGE H. RIDLON, OF REVERE, MASSACHUSETTS, ASSIGNOR TO WILLIAM READ & SONS, OF BOSTON, MASSACHUSETTS, A FIRM.

BASE-BALL MASK.

No. 881,957. Specification of Letters Patent. Patented March 17, 1908.

Application filed October 26, 1907. Serial No. 399,347.

To all whom it may concern:

Be it known that I, GEORGE H. RIDLON, a citizen of the United States, residing at Revere, in the county of Suffolk and State of Massachusetts, have invented certain new and useful Improvements in Base-Ball Masks; and I do hereby declare the following to be a full, clear, and exact description of the invention, such as will enable others skilled in the art to which it appertains to make and use the same.

The present invention relates to an improvement in base-ball masks.

The base-ball catcher, when the position of the sun is such as to strike in his eyes, puts on his cap underneath the mask. In order to get the cap vizor in the correct position, some care has to be exercised, and each time the mask is put on this adjustment is necessary. It has been proposed to provide a base-ball mask with a sun-shade, but the object of the present invention is to provide a base-ball mask with a sun-shade which can be drawn down into shading position or moved back out of the way at the will of the wearer. Another object is to provide means for moving the vizor to inoperative position without requiring anything but a releasing movement. To the above ends the present invention consists in the base-ball mask hereinafter described and particularly defined in the claims.

In the accompanying drawings illustrating the invention Figure 1 is a side elevation of the upper portion of a base-ball mask; and Fig. 2 is a front elevation of the same.

The illustrated embodiment of the invention is described as follows:—The mask itself is of the usual construction except in the following particulars relating to the sun-shade and the means for supporting it on the mask. The sun-shade 1 consists of a piece of leather or other suitable light impervious material, shaped in the form of a vizor. Upon the lower front edge of the vizor is secured a hook 2 shown as bifurcated to straddle the medial wire of the mask and to engage the upper eye wire 3. This hook comprises the means for holding the shade in operative position. Secured to the shade over the hook is a tab 4 which the wearer will grasp to pull down the shade or to release the hook to raise the shade.

To the center of the upper edge of the shade is secured a strap 5 which extends back to a spring reel 6 mounted upon the upper wires of the mask. The spring reel is so constructed as to wind up the strap when the hook 2 is released from the eye wire 3 and to hold the shade raised. When the shade is pulled down the spring is wound up by the unwinding of the strap and the pull which it exerts upon the strap holds the hook 2 engaged with the eye wire 3. Any form of spring device normally acting on the shade to tend to raise it and to hold it in raised position is within the purview of my invention.

In order to confine the movement of the shade, guard wires 7 are provided which are fastened at their lower end to the eye wire 3 at some little distance from the medial wire. From this point these wires extend upwardly somewhat toward each other, where they are fastened together by a stay wire 8, thence the guard wires 7 diverge and extend upwardly to the edge wire of the mask, where they are secured. The guard wires are located a little distance from the outside of the mask and afford a space between the mask and the guard wires in which the shade may be moved.

This invention is not limited to the particular embodiment illustrated in the drawings, but it may be embodied in other forms within the scope of the following claims:—

1. A base-ball mask provided with a sun-shade, and means for securing the sun-shade in operative and inoperative position.

2. A base-ball mask provided with a sun-shade, means for holding the sun-shade in operative position, and a spring contrivance normally tending to move the sun-shade to inoperative position.

3. A base-ball mask provided with a sun-shade, and means for movably supporting the sun-shade so that it may be held in operative or inoperative position.

4. A base-ball mask provided with a sun-shade, guard wires secured to the mask outside of the frame for supporting the sun-shade.

5. A base-ball mask provided with a sun-

shade movable from operative to inoperative position, and a spring device connected with the sun-shade to hold it in one position.

6. A base-ball mask provided with a sun-shade and a spring contrivance normally tending to move the sun-shade to inoperative position.

In testimony whereof I affix my signature, in presence of two witnesses.

GEO. H. RIDLON.

Witnesses:
HORACE VAN EVEREN,
ANNIE C. RICHARDSON.