May 11, 1954 R. G. DUNN 2,678,396

POSITIONER FOR CHILD BEING X-RAYED

Filed Sept. 20, 1952 3 Sheets-Sheet 1

Fig. 1

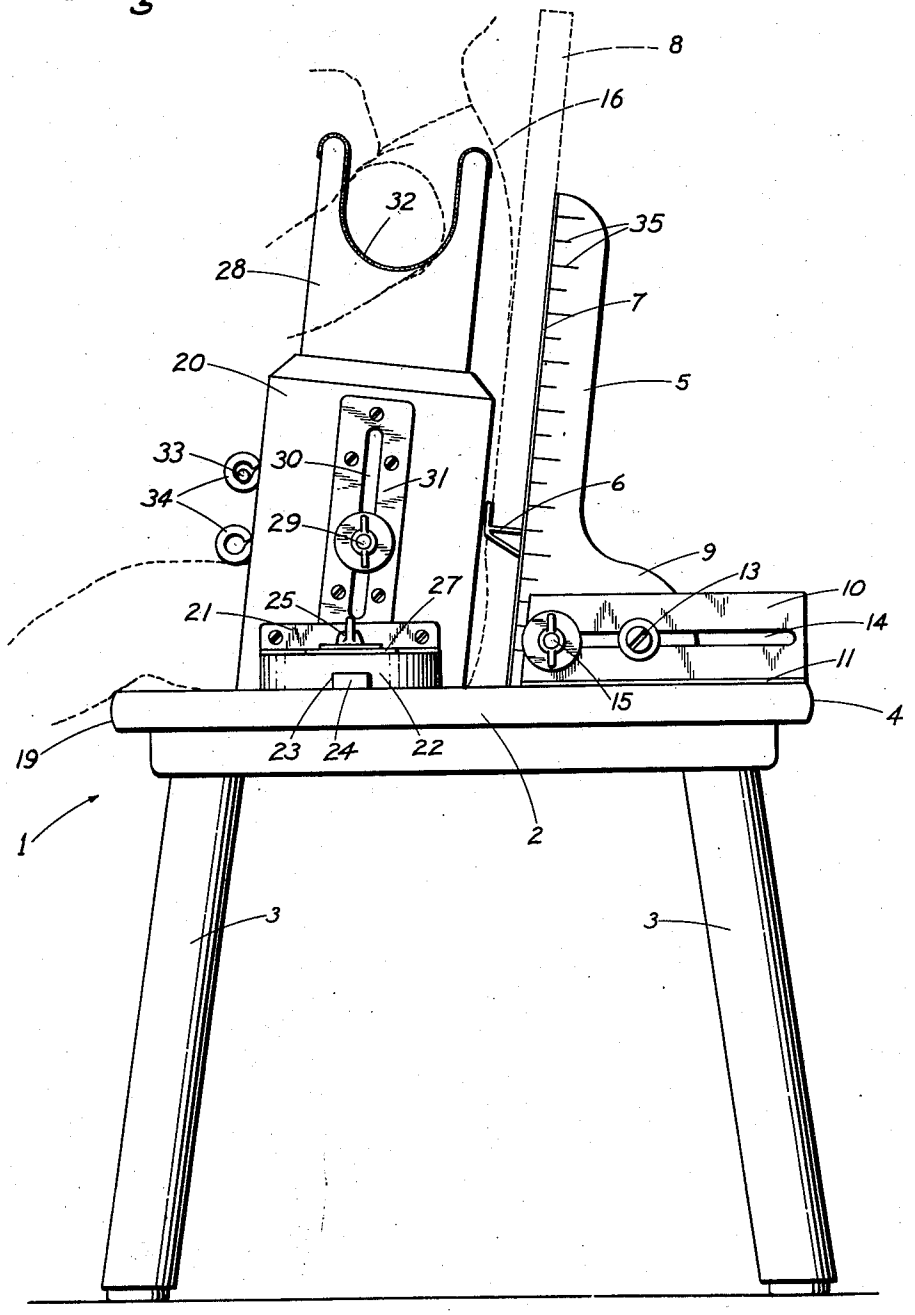


INVENTOR
Robert G. Dunn

BY
Webster & Webster
ATTY'S.

May 11, 1954 R. G. DUNN 2,678,396

POSITIONER FOR CHILD BEING X-RAYED

Filed Sept. 20, 1952 3 Sheets-Sheet 2

Fig. 2

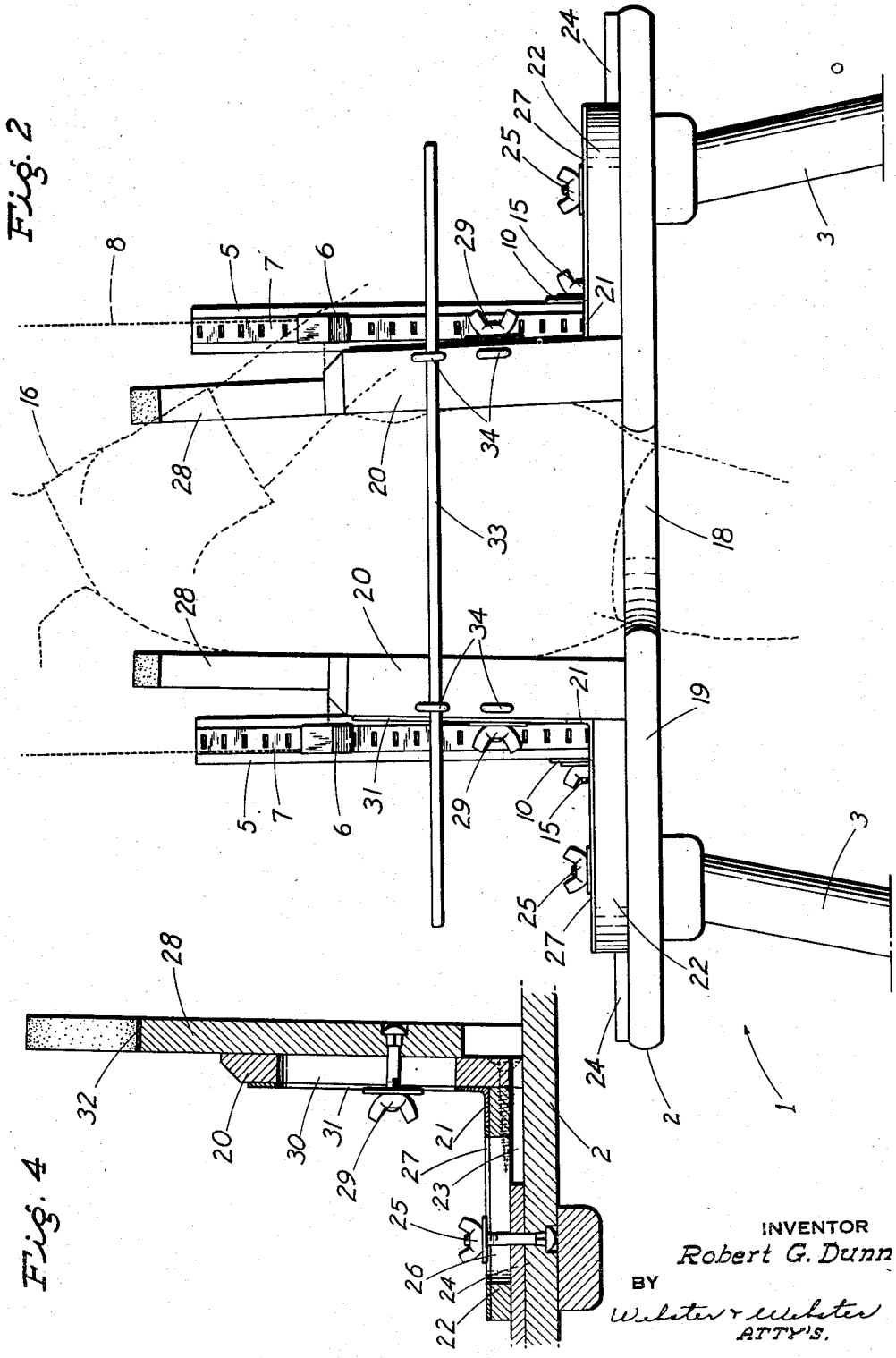


Fig. 4

INVENTOR
Robert G. Dunn
BY
Webster & Webster
ATTY'S.

May 11, 1954 R. G. DUNN 2,678,396

POSITIONER FOR CHILD BEING X-RAYED

Filed Sept. 20, 1952 3 Sheets-Sheet 3

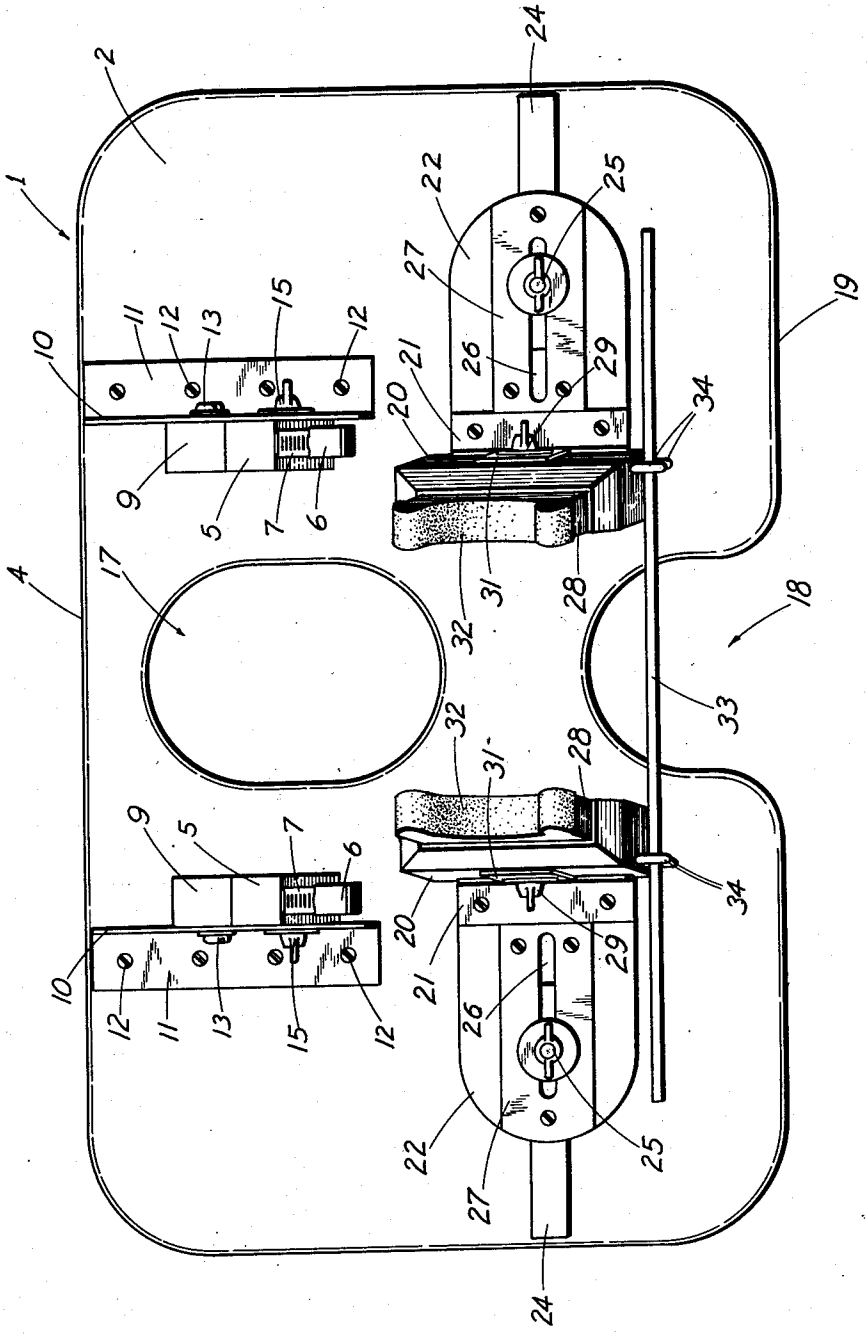


Fig. 3

INVENTOR
Robert G. Dunn
BY
Webster & Webster
ATTY'S.

Patented May 11, 1954 2,678,396

# UNITED STATES PATENT OFFICE

2,678,396

## POSITIONER FOR CHILD BEING X-RAYED

Robert G. Dunn, Sacramento, Calif., assignor of one-half to Philip W. Le Velle, Sacramento, Calif.

Application September 20, 1952, Serial No. 310,674

8 Claims. (Cl. 250—50)

1

This invention is directed to, and it is a major object to provide, a device for use by doctors, laboratories or hospitals, in connection with the taking of X-rays of a child's chest.

Another important object of the invention is to provide a novel device for supporting a child in a seated position, with the child's chest in proper relation to an X-ray film holder.

An additional object of the invention is to provide a device, for the purpose described, which is readily adjustable both to accommodate children of different sizes, and to dispose the child in correct position relative to the X-ray film holder for the taking of a front X-ray of the chest or a side X-ray, selectively.

A further object of the invention is to provide a device, for positioning a child being X-rayed, which is readily portable and convenient to use; the various parts of the device being adjustable by hand and with a minimum of effort.

It is also an object of the invention to provide a positioner for a child being X-rayed which is designed for ease and economy of manufacture.

Still another object of the invention is to provide a practical and reliable positioner for a child being X-rayed, and one which will be exceedingly effective for the purpose for which it is designed.

These objects are accomplished by means of such structure and relative arrangement of parts as will fully appear by a perusal of the following specification and claims.

In the drawings:

Fig. 1 is a side elevation of the device as in use for taking a front X-ray of a child's chest.

Fig. 2 is a front elevation of the device as adjusted and in use for the taking of a side X-ray of the child's chest.

Fig. 3 is a top plan view of the device.

Fig. 4 is a fragmentary transverse section on line 4—4 of Fig. 3.

Referring now more particularly to the characters of reference on the drawings, the device comprises a four-legged stool, indicated generally at 1, which stool comprises a seat board or platform 2 supported by corner legs 3.

Toward the back edge 4 of the seat board 2 the latter is fitted with a pair of transversely spaced, upstanding posts 5 which incline to the rear. The posts 5 are fitted, at the front, with supporting brackets 6 which are vertically adjustably clipped to a slotted bar 7 fixed to the face of said posts. The brackets 6 are adjusted to a predetermined height and serve to support a rectangular, X-ray film holder, indicated at 8; such holder—by virtue of the incline of the posts 5—reclining against the face of the latter.

At their lower ends the posts 5 are each formed with an enlarged, rearwardly projecting foot 9 which rests on top of the seat board 2; each foot

2

bearing laterally against the face of an upstanding attachment plate 10 having a horizontal securing flange 11 fixed to the seat board 2 by screws 12.

Each foot 9 includes a guide screw 13 which runs in a horizontal slot 14 in the related attachment plate 10. Additionally, each foot 9 is maintained in a selected position of front to rear adjustment by means of a lock bolt and wing nut unit 15 which connects between the foot 9 and the plate 10, with the nut extending through slot 14. With this arrangement the posts 5 may be adjusted forwardly or rearwardly in order to properly position the film holder 8 relative to the back of a child, indicated at 16, seated on the board 2 in a forwardly facing position, as in Fig. 1, or relative to the side of a child seated on the board in a laterally facing position, as in Fig. 2.

When the child is seated in a laterally facing position, one leg projects through an opening 17 in the seat board 2 between the feet 9, while the other leg of the child is received in a relatively deep notch 18 cut into said seat board 2 from the front edge 19 of the latter.

The child is maintained in either position by means of the following structure:

A pair of transversely spaced, laterally facing standards 20 upstand from the seat board 2 in spaced relation ahead of the posts 6, but with substantially the same rearward inclination or cant.

The standards 20 are fixed, at their lower ends, by means including an angle piece 21, to corresponding horizontal slide blocks 22 which rest on the seat board in laterally outwardly projecting relation. The slide blocks 22 are formed with downwardly opening channels 23 which receive lateral guide rails 24 fixed on the seat board 2; said slide blocks 22 being thus mounted for adjustment of the spacing therebetween. Normally, the slide blocks 22 are each secured against sliding motion by means of a locking bolt and wing nut unit 25 which extends upwardly from the seat board 2 through the related guide rail and through an elongated slot 26 in the slide block; there being a slotted wear plate 27 on each slide block 22, as shown.

The standards 20 are channeled, as at 20*a*, and receive—in vertically adjustable relation—upstanding slides 28 maintained in selected position of vertical adjustment by a locking bolt and wing nut unit 29 which extends from each slide 28 through a slot 30 in the related standard 20; the latter having a slotted wear plate 21 against which the unit 29 bears.

At their upper ends the slides 28 are formed with padded, arm receiving cradles 32.

When the child is seated on the stool 1 in forwardly facing position, for the taking of a front X-ray of the chest, not only are the posts 5

properly adjusted in a front to rear direction, but additionally the standards 20 are adjusted laterally to engage the sides of the child. Further, the slides 28 are adjusted so that the padded cradles 32 engage the arm pits of the child.

To further assure that the child remains in proper position for the taking of a front X-ray, a horizontal rod 33 extends in front of the child's abdomen, and such rod is supported—at opposite ends—in alined eyes 34 on the front of the standards 20; there being an upper and lower set of such eyes to accommodate children of different sizes.

With the parts adjusted, and with the child positioned as in Fig. 1, a front X-ray can be taken effectively and with the likelihood of the child getting out of position being minimized. Also, the child sits naturally, so that fear is avoided to a great extent.

For a side X-ray, the child is seated on the stool in a laterally facing direction and with the child's legs projecting through opening 17 and notch 18, as previously described. Thereafter, the posts 5 are appropriately adjusted to position the X-ray film holder 8 against the adjacent side of the child; the rod 33 extending across the opposite side of the child, as clearly shown in Fig. 2.

Also, in this position the slides 28 are fully lowered, and the standards 20 are adjusted so that they engage the abdomen and the back of the child, whereby to hold its body in correct position for a side X-ray of the chest.

The posts 25 are vertically scaled, as at 35, to the end that the supporting brackets 6 may be set at a point to correctly dispose the X-ray film holder 8 in the horizontal plane of the chest of the child being X-rayed; it being known from the predetermined size of the child what setting of the brackets 6 is required.

From the foregoing description it will be readily seen that there has been produced such a device as will substantially fulfill the objects of the invention, as set forth herein.

While this specification sets forth in detail the present and preferred construction of the device, still in practice such deviations from such detail may be resorted to as do not form a departure from the spirit of the invention, as defined by the appended claims.

Having thus described my invention, the following is claimed as new and useful, and upon which Letters Patent are desired:

1. A positioner, for a child being X-rayed, comprising a seat, X-ray film holder supporting means upstanding from the rear of the seat, said means including transversely spaced upstanding posts having forwardly projecting elements thereon to engage a film holder from below and support it facing forwardly, feet on the lower ends of the posts projecting rearwardly, and a mount between the seat and feet securing the latter in normally fixed but horizontal adjustable relation in a front to rear direction; there being transversely spaced body positioning standards upstanding from the seat forwardly of the supported film holder.

2. A positioner, for a child being X-rayed, comprising a seat, X-ray film holder supporting means upstanding from the rear of the seat, a holder supported by said means facing forwardly, transversely spaced body positioning standards upstanding from the seat forwardly of the supported film holder, and a cross member adapted to span between the standards in front of a child occupying the seat.

3. A positioner, for a child being X-rayed, comprising a seat, X-ray film holder supporting means upstanding from the rear of the seat, a holder supported by said means facing forwardly, transversely spaced body positioning standards upstanding from the seat forwardly of the supported film holder, and slides vertically adjustably mounted on the standards adapted to engage the arm-pits of a child occupying the seat and facing forwardly therefrom.

4. A positioner, as in claim 3, in which said holder supporting means is adjustable in a front to rear direction, and said standards are adjustable to alter the spacing therebetween.

5. A positioner, for a child being X-rayed, comprising a seat, X-ray film holder supporting means upstanding from the rear of the seat, a holder supported by said means facing forwardly, the seat having a leg opening therethrough intermediate the front edge and the supported film holder so that the child may occupy the seat facing laterally or forwardly selectively; and transversely spaced adjustable body positioning standards upstanding from the seat forwardly of the supported film holder and on opposite sides of said leg opening.

6. A positioner, as in claim 5, in which the film holder supporting means is adjustable in a front to rear direction; and a cross member adapted to span between the standards outwardly of a child occupying the seat in a laterally or forwardly facing position.

7. A positioner for a child being X-rayed, said positioner comprising a flat platform, said platform having a leg opening therein intermediate its front and back edges and a leg receiving notch in its front edge in spaced relation to the front edge of said opening to leave a seating area therebetween, upstanding film-holder supporting members on opposite sides of the opening, and means mounting the members on the platform for movement relative thereto in a front to rear direction.

8. A positioner for a child being X-rayed, said positioner comprising a flat platform having a seat-forming area thereon, film-holder supporting means mounted and upstanding from the platform rearwardly of said area, and body positioning units upstanding from the platform on opposite sides of said area; each unit comprising a standard, means mounting the standard on the platform for lateral adjustment thereon, a slide upstanding from the standard and arranged at its upper end for arm-pit engagement and means mounting the slide on the standard for vertical adjustment relative thereto.

References Cited in the file of this patent

UNITED STATES PATENTS

| Number | Name | Date |
|---|---|---|
| 527,056 | Gilson | Oct. 9, 1894 |
| 1,074,615 | Folmer | Oct. 7, 1913 |
| 1,339,296 | Sparks | May 4, 1920 |
| 1,442,027 | Levenson | Jan. 9, 1923 |
| 1,908,136 | Fox | May 9, 1933 |
| 2,111,903 | Rona | Mar. 22, 1938 |
| 2,220,725 | Moe | Nov. 5, 1940 |
| 2,571,011 | Chapman | Oct. 9, 1951 |