Aug. 15, 1939. J. L. LÉGERON 2,169,563

ELECTRODE AND ITS SUSPENSION

Filed July 1, 1937 2 Sheets-Sheet 1

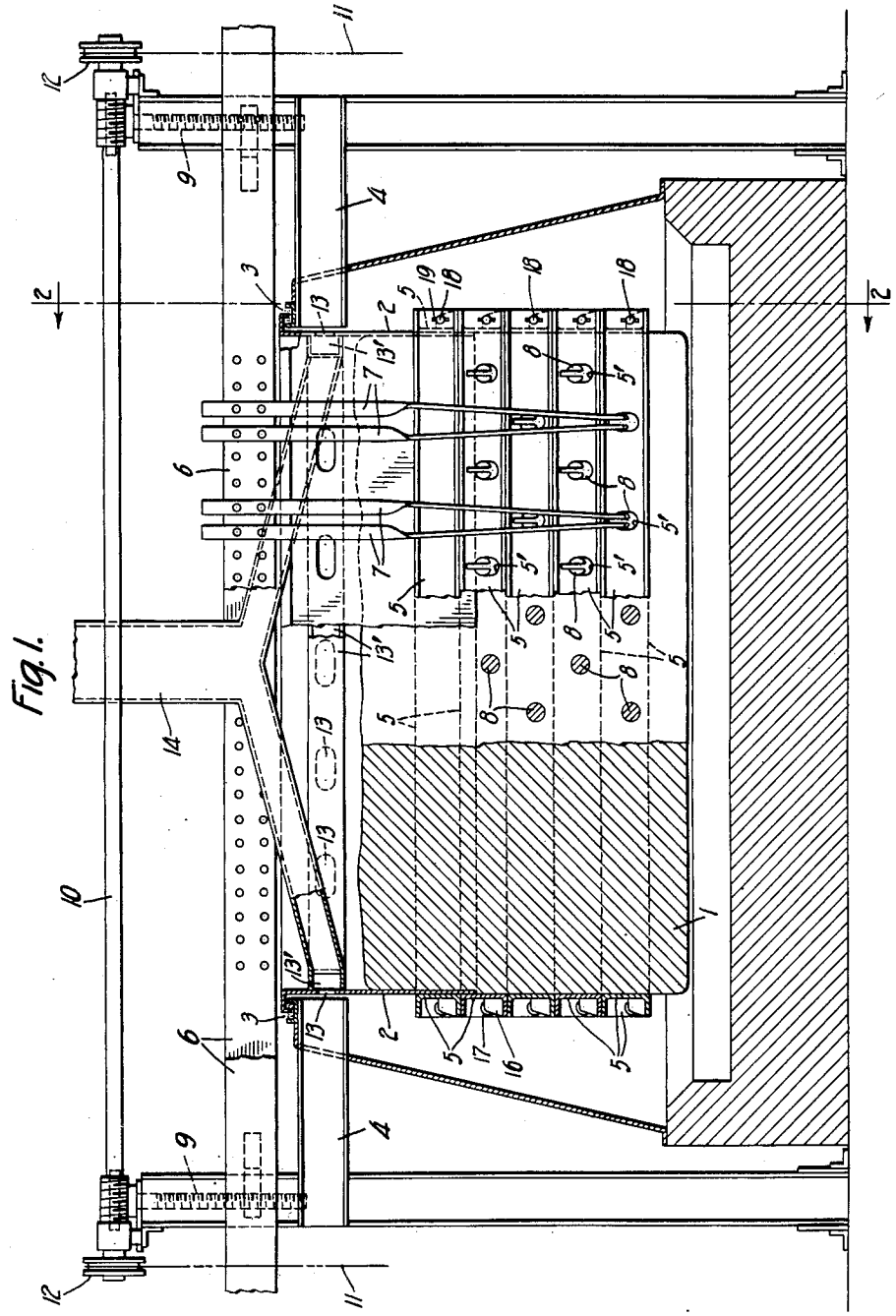

Fig. 1.

INVENTOR
Jean Louis Legeron
BY
Harry Cole & Garner
ATTORNEYS

Aug. 15, 1939. J. L. LÉGERON 2,169,563

ELECTRODE AND ITS SUSPENSION

Filed July 1, 1937 2 Sheets-Sheet 2

Fig. 2.

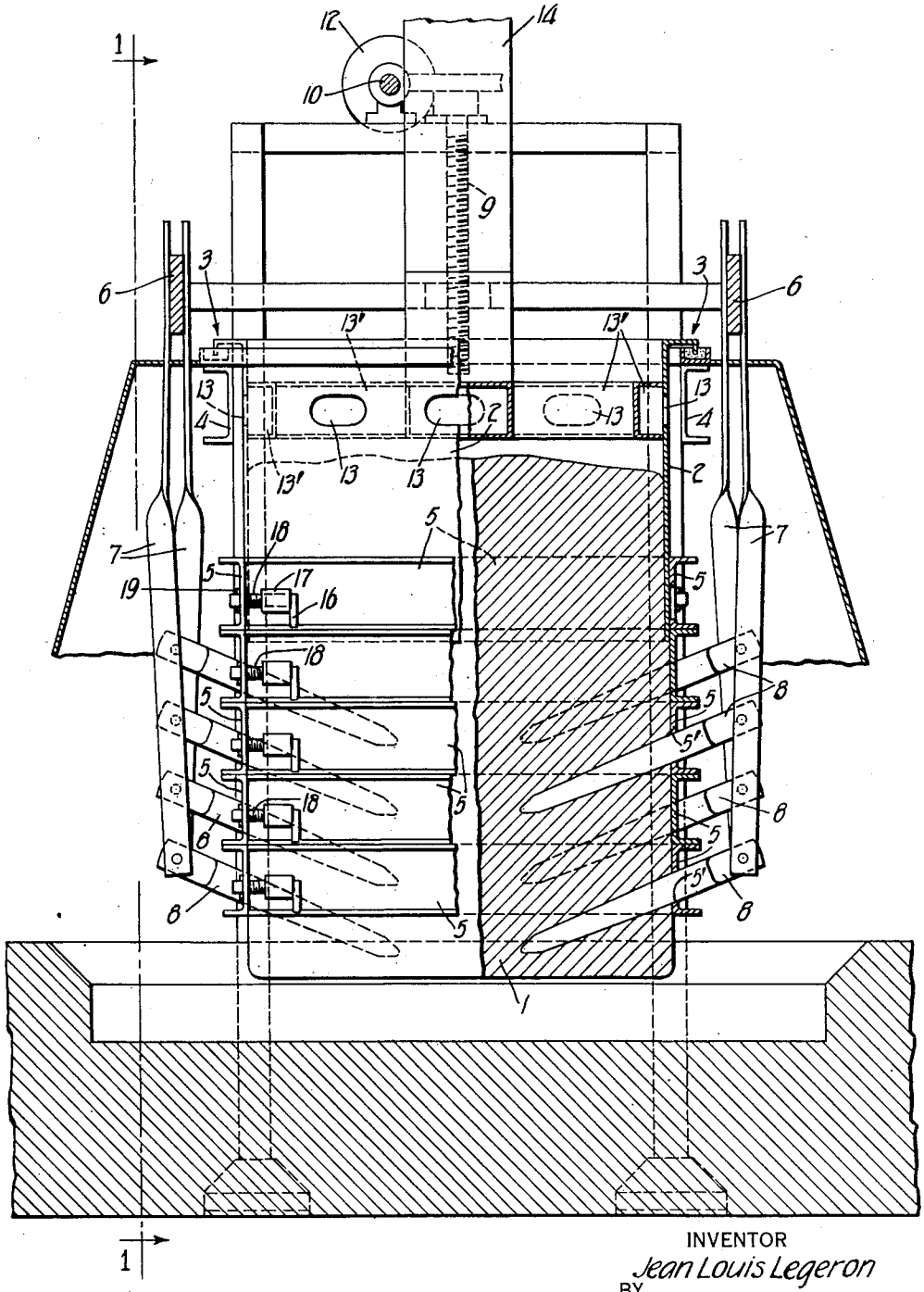

INVENTOR
Jean Louis Legeron
BY
Dorsey Cole & Farmer
ATTORNEYS

Patented Aug. 15, 1939 2,169,563

UNITED STATES PATENT OFFICE

2,169,563

ELECTRODE AND ITS SUSPENSION

Jean Louis Légeron, Riouperoux, France, assignor to Det norske Aktieselskab for Electrokemisk Industri, Oslo, Norway

Application July 1, 1937, Serial No. 151,370
In Norway July 8, 1936

10 Claims. (Cl. 13—9)

This invention relates to continuous electrodes, commonly referred to as selfbaking electrodes, and has reference more particularly to the electrodes and the general assembly of electrode holder, contact studs, supporting and regulating means, set forth in Norwegian Letters Patent No. 55,434, which corresponds with U. S. Letters Patent No. 2,073,356, granted March 9, 1937.

The invention, while utilizing the general features of assembly and construction of the said Letters Patent, has for its primary object an improvement in the structure thereof for reducing the corrosion at the lower end of the electrode which in certain instances has characterized the commercial use of the structure therein specifically set forth.

A further object of the invention is a structure conforming in general with the structure of the said Letters Patent in which the electrode casing or mantle therein illustrated is eliminated.

Further objects of the invention will be apparent as this description proceeds.

In the electrode assembly illustrated in the said Letters Patent the electrode holder comprises alternately stacked, corresponding and interchangeable beams, overlapping at their ends and surrounding the electrode. Contact studs are provided for effecting a supporting engagement between the electrode and at least two of the beams. The beams have their ends interlocking and are there provided with suspending means by which the electrode holder and the electrode may be lowered in the furnace during the operation thereof as the electrode burns away at the bottom. The electrode is molded in a casing or mantle to which the electrode mass firmly adheres on baking, so that the electrode and its casing become in effect a unitary structure in the travel of the electrode to the melt.

The electrode holder beams in commercial installations of the structure of the said Letters Patent are ordinarily made of U-iron with their upper and lower flanges extending outwardly. They are commonly such that in their stacked relation 50% of the surface of the electrode mantle is exposed between them. These beams are commonly ten centimeters wide, and this becomes a material consideration at the working end of the electrode. In practice, when the said structure is employed, for example, in aluminum furnaces, as the lower beams of the holder reach the crust covering the bath in the furnace, they are transferred from the bottom of the holder to the top thereof. This leaves exposed a further area of the surface of the electrode casing, ten centimeters wide in the assumed commercial structure. As the electrode casing generally consists of aluminium which melts at 600° C. the electrode near the bath surface will on the melting of the casing be subjected to oxidation by air. This may under unfavourable circumstances, for example when the furnace for some reason operates somewhat warmer than usual, lead to a serious corrosion of the electrode. This corrosion may under certain circumstances progress so far upwards that the part of the electrode inside of the second row of beams from the bottom of the electrode holder will become corroded. Oven gases will then pass upwards inside of these beams and escape through the open space above. This situation is very dangerous to the operation of the electrode and may even necessitate total cutting off of the electrode on account of corrosion.

Applicant has found that the above mentioned difficulties may be avoided in a very effective way by placing the electrode holder beams with their inner faces flush and their sides contiguous throughout the portion of the beams contacting with the electrode so as to form in effect a continuous unbroken inner surface at the beam joints, the beams in each row being superimposed one on the other, suitable fastening means being provided for maintaining the beams in this position. The iron contact studs by which electric current is conducted to and into the interior of the electrode mass and by which the electrode holder and the electrode are supported are in this construction inserted through special holes in the container thus formed. The holes may be placed in the beams and then preferably near their lower flange, or between the beams, one half of the hole being cut in the upper edge of the lower beam and the other half in the lower edge of the beam above. By this last arrangement the contacts are made independent of the beams.

My invention embodied in the improved structure above set forth possesses many advantages in the operation of the furnace. The electrode surface is very effectively protected without departing from the principle of the suspension and an electrode mold is formed comprising a casing made of interchangeable frames into which the electrode mass may be directly filled.

This construction of casing with the superimposed beams contiguous and their inner faces flush throughout the portion contacting with the electrode makes possible the omission of the electrode mantle casing in the construction il-

lustrated and described in the said Letters Patent (Norweigian, 55,434—U. S., 2,073,356), which is very advantageous from a standpoint of economy and of possible contamination of the melt. I have discovered that by providing the beams with a smooth, clean inner surface, the coking (i. e., the adhesion of the electrode mass and electrode to the beams by the action of the binding agents in the electrode mass on baking of the electrode) is not such as to prevent the removal and transfer of the lower beams from the bottom of the electrode to the top thereof on the burning away of the electrode at the bottom, as contemplated herein, without breaking away parts of the electrode on such removal.

The beams may however in the construction described be provided with an inside layer of graphite or a mixture of graphite and oil, alumina and tar or the like, to further facilitate their removal. If desired a thin aluminium casing may be employed, for example in the form of aluminium foil. If the foil is in a roll this is simply placed on the electrode platform in such a way that the foil is automatically pulled off the roll as the electrode sinks down into the furnace. This also has the advantage that a good packing may be made between the electrode and the platform, which is very desirable, especially in closed furnaces. Another advantage is obtained in that the holes for the contacts become covered by the foil so that no electrode mass may leak out therethrough while they are still open. It has, however, been found that there is only danger of the mass leaking out through the contact holes in the upper part of the electrode mass. As soon as the mass is dried a little in the electrode it will become sufficiently viscous to be kept inside the electrode casing without flowing out through the contact holes. In the upper part of the electrode mass it is however generally necessary to cover the holes either by inserting the contacts into the casing before the mass is filled up to said holes or in other ways.

Thus, for example, applicant has found it advantageous to cover the upper holes for the contact studs in his construction heretofore described by one or more thin iron plates which may be formed into a shell. This shell may be conveniently suspended from its top portion on the framework which supports the electrode above the furnace. The shell when employed extends downward a suitable distance between the electrode casing or mold and the electrode mass. On lowering the electrode, the electrode at the top slides through the shell. This provision of a shell for covering the upper holes of the casing is particularly advantageous for closed furnaces by reason of the tight packing between the electrode and the platform which may be attained in its use. Furthermore, the shell if apertured above the container or casing provides a convenient means for conducting the furnace gas to an exhaust outlet above the electrode.

Another important advantage resulting from the invention hereof resides in the reduction in the height of the electrode casing as compared with the mantle casing commonly employed in commercial installations of the electrode assembly specifically shown and described in the said Letters Patent (Norwegian, No. 55,434—U. S., 2,073,356). In such commercial installations it is common practice to construct the electrode mantle casing in one meter sections. On successively attaching new sections of the mantle casing above that of the electrode, as the electrode is burned away at the bottom in such commercial constructions the new section projects above the iron framework in open furnaces and above the top of the furnace hood in closed furnaces, and in either case, is objectionable for this reason. This is not true with the casings constructed in accordance herewith in which a much reduced height of electrode and casing is possible. As an example, satisfactory results have been obtained in installations hereof in which the total height of electrode and casing vary from about 1 to 1.20 meters. This reduced height of electrode and casing overall permits the direct connection of the suspension mechanism to a shaft suitably mounted immediately over the top of the electrode.

I have illustrated my invention in the accompanying drawings which are schematic in character and must be considered in connection with the foregoing description and supplemented by reference to the said Letters Patent (Norwegian, 55,434—U. S., 2,073,356) particularly for mechanical details not herein specifically shown, as will be readily understood. In these drawings,

Fig. 1 is a vertical sectional view, generally on the line 1—1 of Fig. 2, of one form of my invention adapted for use in a closed type furnace, the electrode, iron shell, casing, contact studs and their supporting means being shown in elevation at the right of the figure, the parts being broken away at the middle of the figure down to the surface of the electrode; and

Fig. 2 is a vertical sectional view of the construction illustrated in Fig. 1, generally on the line 2—2 of Fig. 1, the electrode, iron shell, casing, and the exposed portion of the contact studs and their supporting means being shown in elevation at the left of the figure, and with parts being omitted for clarity of illustration.

Reference being had to Figs. 1 and 2 in which the respective vertical sections illustrated are at right angles to one another, the electrode material or mass, which when baked comprises the electrode 1, is supplied to the top of the electrode in the electrode casing or mold to compensate for the burning away of the electrode at the bottom in a manner well-known in the making and use of continuous selfbaking electrodes. This casing as heretofore set forth is formed by the beams 5 which are placed in rows, one row on each side of the electrode with the inner faces of the beams in each row flush and the sides contiguous throughout the portion of the beams which contact with the electrode. Suitable means are provided for fastening the beams together in this position. As seen in the drawings the beams thus form in effect a continuous unbroken inner surface throughout their contact with the electrode mass and the electrode 1.

As illustrated the beams 5 of the casing on two opposite sides thereof are provided with holes or apertures 5' for the insertion therethrough of the contact studs 8 heretofore referred to. It is preferred that contact studs in the adjoining beams be offset laterally with the contact studs in the alternate beams in each row in line vertically as is indicated by the apertures 5'. Current is supplied directly to the contact studs by the bars 7 through which as illustrated the studs and in turn the casing and electrode are supported. As indicated, the contact studs in the lowest pair of beams on the sides of the casing in which the contact studs are inserted are the

only ones connected with the bars 7 and sustain the weight of the electrode and casing except during the removal and transfer of the lower beams to the top of the casing as above set forth, during which time the electrode and its casing are supported in well-known manner, as, for example, as shown in the said Letters Patent (Norwegian 55,434—U. S., 2,073,356).

At the top the electrode and casing is provided with an iron shell 2, the lower portion of which extends down into the inside of the casing below the upper contact stud holes 5' and is in close contact with the casing. This prevents any of the unbaked electrode mass from protruding from these holes. The top of the iron shell is provided with a flange by which it is suspended from the framework 4 with which the shell forms a sand-lock 3, suitable adjustability being provided between the parts.

The bars 7 are suspended above from a current-carrying frame 6 which in turn is supported by and may be raised or lowered by means of spindles 9 connected to a central shaft 10 operable by means of chains 11 and chain wheels 12.

As illustrated means are provided for exhausting the furnace gases from the closed furnace therein illustrated. The shell 2 is provided with apertures 13 above the casing beams 5 which lead to a conduit 13' on the inside of the shell. A stack 14 connects with the conduit 13' and through this the gases are lead away from the furnace.

If desired electric current may be supplied directly to the contact studs 8 by means of cables or the like which are connected to the outer ends of the contacts, all in well-known manner. Or such cables may be connected with the electrode casing and the holes for the contacts so arranged that the current will pass from the casing to the contacts. The contacts must then be adjusted to fit into the holes, if necessary by grinding, so that a sufficient electric connection is obtained.

The described structure may of course also be employed in open type furnaces and with electrodes of a shape other than rectangular, for instance with round or oblong electrodes.

The fastening connection between the separate beams must be made so that the lower row of beams comprising the bottom of the casing may be readily removed for transposition to the top of the casing. The form of fastening means illustrated for connecting the ends of the beams together comprises an upright member 16 integrally attached to each of the beams 5 which form the ends of the casing a suitable distance from the ends of said beams one at each end thereof. Each of these members 16 carries a threaded shell 17 integrally attached thereto and extending horizontally therefrom outwardly toward the ends of the beam. Into these shells 17 are screwed bolts 18 which are apertured at their outer ends to receive fastening pins 19. The beams 5 comprising the sides of the casing extend beyond and contact with the ends of the beams 5 comprising the ends of the casing and in the extension of each of the side beams are provided apertures through which the bolts 18 extend, the bolts 18 being screwed into the shell 17 so that the pins 19, positioned on the outside of the side beams 5 contact firmly with the side beams and hold them tight against the ends of their cooperating end beams. To remove the lower beams of the casing it is preferable that the pins 19 be taken out and the bolts 18 be screwed into the shells 17 a distance to clear the ends of the side beams, although this is obviously optional. This releases the end connections of the lower row of beams and permits of their removal from the bottom of the electrode casing to the top of the electrode casing in the manner heretofore set forth. Whereupon the bolts 18 are extended a suitable distance, by unscrewing the same, through the appropriate apertures in the ends of the side beams 5, and the pins 19 driven home to reconnect the end and side beams at the top of the electrode casing.

Applicant has by means of a suitable construction without difficulty been able to make electrodes where the long axis of the cross-section is 3.5 to 4 meters long. This may without doubt be very much increased. One may thus make single electrodes for current as high as 40,000 to 60,000 amperes and probably still higher. In this way one may in a very simple manner make simple furnaces of considerably greater capacity than has hitherto been possible.

The foregoing detailed description and illustrations have been given for clearness of understanding and no undue limitations should be deduced therefrom, but the appended claims should be construed as broadly as possible in view of the prior art.

I claim:

1. An electrode casing for a selfbaking electrode, which comprises a mold for the electrode and which is formed by a series of metallic beams arranged in rows the beam in each row being superimposed one on the other in planes perpendicular to the axis of the electrode and placed with their inner faces flush and their side edges contiguous throughout the portion of the beams contacting with the electrode, the arrangement being such as to form in effect a continuous unbroken inner surface at the beam joints, the beams being removably attached one with the other by suitable means such that as the lower beam or beams of the series approach the melt the said lower beam or beams may be detached from the said casing at the bottom thereof and reattached thereto at the top thereof.

2. The combination of a selfbaking electrode, an electrode casing therefore which comprises a mold for the electrode and which is formed by a series of contiguous metallic beams arranged in planes perpendicular to the axis of the electrode and removably attached one with the other by suitable means such that as the lower beam or beams of the series approach the melt the said lower beam or beams may be detached from the said casing at the bottom thereof and reattached thereto at the top thereof, and means interposed between the casing and the electrode which prevent such coking of the electrode mass between the electrode and the casing as to preclude the ready removal of the said lower beam or beams of the casing from the electrode.

3. The combination of a selfbaking electrode, an electrode casing therefor which comprises a mold for the electrode and which is formed by a series of contiguous metallic beams arranged in planes perpendicular to the axis of the electrode and removably attached one with the other by suitable means such that as the lower beam or beams of the series approach the melt the said lower beam or beams may be detached from the said casing at the bottom thereof and reattached thereto at the top thereof, and aluminum foil interposed between the casing and the electrode to prevent such coking of the electrode mass be-

tween the electrode and the casing as to preclude the ready removal of the said lower beam or beams of the casing from the electrode.

4. The combination of a selfbaking electrode, an electrode casing therefor which comprises a mold for the electrode and which is formed by a series of contiguous metallic beams arranged in planes perpendicular to the axis of the electrode and removably attached one with the other by suitable means such that as the lower beam or beams of the series approach the melt the said lower beam or beams may be detached from the said casing at the bottom thereof, and reattached thereto at the top thereof, and means comprising graphite interposed between the casing and the electrode which prevent such coking of the electrode mass between the electrode and the casing as to preclude the ready removal of the said lower beam or beams of the casing from the electrode.

5. The combination of a selfbaking electrode, an electrode casing therefor which comprises a mold for the electrode and which is formed by a series of contiguous metallic beams arranged in planes perpendicular to the axis of the electrode and removably attached one with the other by suitable means such that as the lower beam or beams of the series approach the melt the said lower beam or beams may be detached from the said casing at the bottom thereof and reattached thereto at the top thereof, and means comprising a mixture of alumina and tar interposed between the casing and the electrode which prevent such coking of the electrode mass between the electrode and the casing as to preclude the ready removal of the said lower beam or beams of the casing from the electrode.

6. The combination of a selfbaking electrode, an electrode casing therefor which comprises a mold for the electrode and which is formed by a series of metallic beams arranged in rows the beams in each row being superimposed one on the other in planes perpendicular to the axis of the electrode and placed with their inner faces flush and their side edges contiguous throughout the portion of the beams contacting with the electrode, the arrangement being such as to form in effect a continuous unbroken inner surface at the beam joints, the beams being removably attached one with the other by suitable means such that as the lower beam or beams of the series approach the melt the said lower beam or beams may be detached from the said casing at the bottom thereof and reattached thereto at the top thereof, said casing being provided with apertures suitable for the insertion therethrough of contact studs, and removable contact studs extending through said apertures for conducting current into the electrode.

7. The combination of a selfbaking electrode, an electrode casing therefor which comprises a mold for the electrode and which is formed by a series of metallic beams arranged in rows the beams in each row being superimposed one on the other in planes perpendicular to the axis of the electrode and placed with their inner faces flush and their side edges contiguous throughout the portion of the beams contacting with the electrode, the arrangement being such as to form in effect a continuous unbroken inner surface at the beam joints, the beams being removably attached one with the other by suitable means such that as the lower beam or beams of the series approach the melt the said lower beam or beams may be detached from the said casing at the bottom thereof and reattached thereto at the top thereof, said casing being provided with apertures suitable for the insertion therethrough of contact studs, said apertures being formed at the contiguous edges of adjoining casing beams, and removable contact studs extending through said apertures for conducting current into the electrode, the construction and relation of said apertures and contact studs being such as to permit of independent removal of the casing beams and contact studs.

8. The combination of a selfbaking electrode, an electrode casing therefor which comprises a mold for the electrode and which is formed by a series of metallic beams arranged in rows the beams in each row being superimposed one on the other in planes perpendicular to the axis of the electrode and placed with their inner faces flush and their side edges contiguous throughout the portion of the beams contacting with the electrode, the arrangement being such as to form in effect a continuous unbroken inner surface at the beam joints, the beams being removably attached one with the other by suitable means such that as the lower beam or beams of the series approach the melt the said lower beam or beams may be detached from the said casing at the bottom thereof and reattached thereto at the top thereof, said casing being provided with apertures suitable for the insertion therethrough of contact studs, removable contact studs extending through said apertures for conducting current into the electrode, and means interposed between the casing and the electrode for preventing the electrode mass from protruding into the apertures prior to the insertion of the contact studs therethrough.

9. The combination of a selfbaking electrode, an electrode casing therefor which comprises a mold for the electrode and which is formed by a series of metallic beams arranged in rows the beams in each row being superimposed one on the other in planes perpendicular to the axis of the electrode and placed with their inner faces flush and their side edges contiguous throughout the portion of the beams contacting with the electrode, the arrangement being such as to form in effect a continuous unbroken inner surface at the beam joints, the beams being removably attached one with the other by suitable means such that as the lower beam or beams of the series approach the melt the said lower beam or beams may be detached from the said casing at the bottom thereof and reattached thereto at the top thereof, said casing being provided with apertures suitable for the insertion therethrough of contact studs, removable contact studs extending through said apertures in the casing for conducting current into the electrode, and an iron shell interposed between the casing and the electrode at the top for preventing the electrode mass from protruding into the apertures at the top of the casing, said iron shell being relatively movable respecting the casing and the electrode.

10. The combination with a hooded electric furnace of a selfbaking electrode, an electrode casing therefor which comprises a mold for the electrode and which is formed by a series of contiguous metallic beams arranged in planes perpendicular to the axis of the electrode and removably attached one with the other by suitable means such that as the lower beam or beams of the series approach the melt the said lower beam or beams may be detached from the said casing at the bottom thereof and reattached thereto at the top thereof, said casing being provided

with apertures suitable for the insertion therethrough of contact studs, removable contact studs extending through said apertures in the casing for conducting current into the electrode, an iron shell interposed between the casing and the electrode at the top for preventing the electrode mass from protruding into the apertures at the top of the casing, said iron shell being relatively movable respecting the casing and the electrode and being provided near its top with gas vent apertures positioned within the hood of the furnace, and means cooperating with said gas vents for conducting gas passing therethrough away from the furnace.

JEAN LOUIS LÉGERON.