Oct. 5, 1954 B. C. ROEHRL 2,690,947

SPARK PLUG CONTAINER

Filed Dec. 12, 1951 2 Sheets-Sheet 1

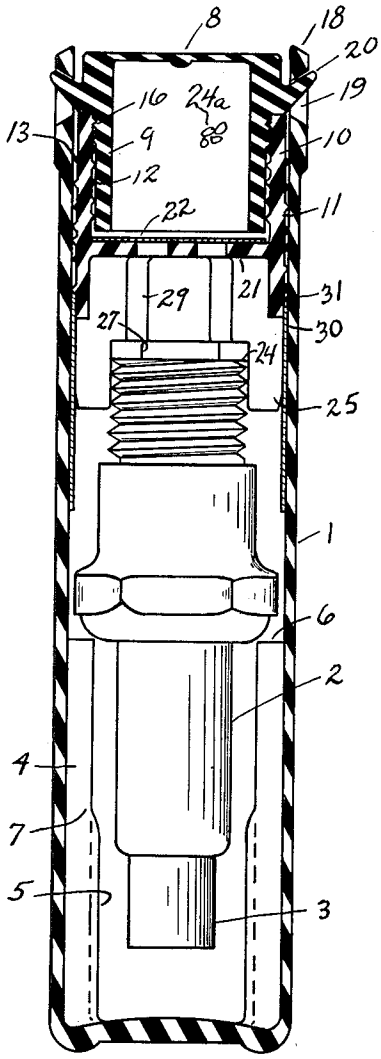

FIG. 1

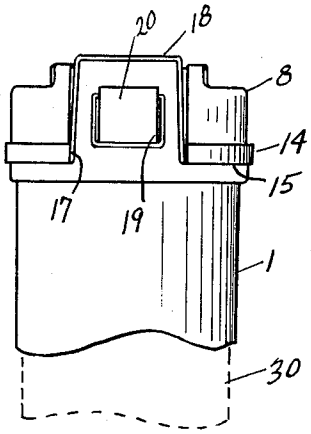

FIG. 2

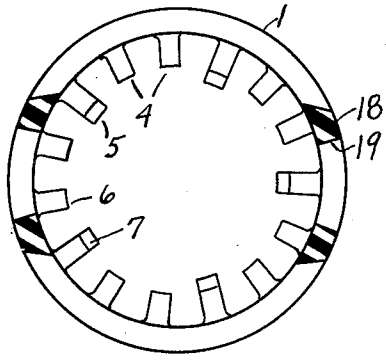

FIG. 3

Inventor

Bruno C Roehrl

By

Ralph Hammar

Attorney

Oct. 5, 1954 B. C. ROEHRL 2,690,947

SPARK PLUG CONTAINER

Filed Dec. 12, 1951 2 Sheets-Sheet 2

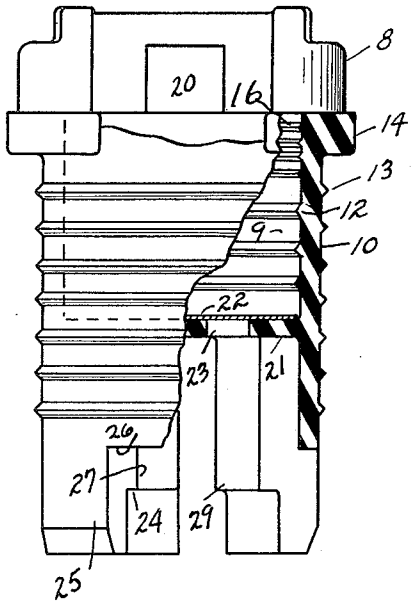

FIG. 4

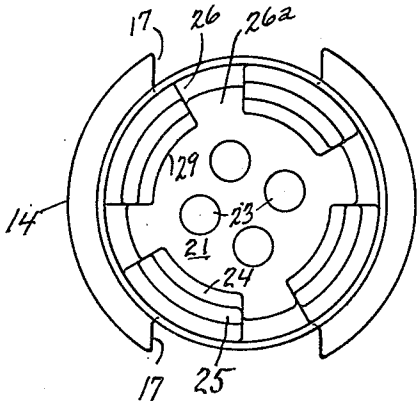

FIG. 6

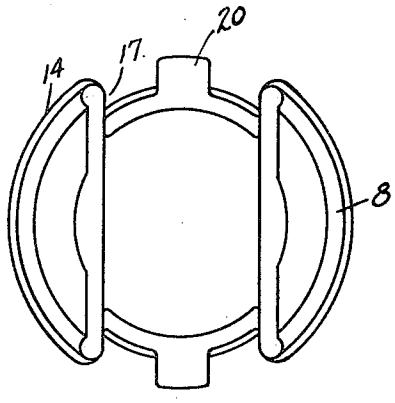

FIG. 5

Inventor

By Bruno C Roehrl

Ralph Hamnar

Attorney

Patented Oct. 5, 1954

2,690,947

UNITED STATES PATENT OFFICE

2,690,947

SPARK PLUG CONTAINER

Bruno C. Roehrl, Erie, Pa., assignor to Nosco Plastics, Incorporated, Erie, Pa., a corporation of Pennsylvania

Application December 12, 1951, Serial No. 261,315

8 Claims. (Cl. 312—31.1)

1

It is desirable that articles such as aircraft spark plugs be kept in sealed moistureproof containers which can be easily, but not accidentally, opened and which preferably can be re-used. It is also desirable that the container have visual indication that the container is in proper condition to protect the spark plugs. The containers should be adaptable to the various sizes of spark plugs. This invention is intended to meet the foregoing requirements.

In the drawing, Fig. 1 is a longitudinal section through a container; Fig. 2 is a fragmentary side view; Fig. 3 is an end view with the closure removed; Fig. 4 is an enlarged side view of the closure; and Figs. 5 and 6 are top and bottom views of the closure.

The main body 1 of the container is designed especially for aircraft spark plugs and is preferably made of a material having low vapor transmission such as polyethylene. A spark plug 2 is inserted into the body of the container in an inverted position with the terminal or top 3 toward the bottom of the container. Adjacent the bottom of the container are a series of inwardly projecting ribs 4 which engage and center the top 3 of the spark plug. Certain of the ribs 4 are provided with projections 5 of greater height which engage the smaller diameter tips of certain of the spark plugs. The ribs 4 together with the projections 5 accommodate the presently available spark plugs. Shoulders 6 and 7 on the ribs and projections 4 and 5 keep the spark plugs slightly above the bottom of the container thereby permitting free circulation of air about the spark plug. From one aspect the ribs 4 can be considered as stepped to provide the shoulders 7 and the extensions 5.

The top of the container is closed by a stopper which comprises a cup-shaped cap 8 having side walls 9 telescoped within the side walls 10 of a cup-shaped rubber sealing gasket 11. On the inner and outer surfaces of the side walls 10 are staggered annular ribs 12 and 13 which make sealing engagement respectively with the outer surface of the walls 9 on the cap and with the inner surface of the container body. The staggering of the ribs 12 and 13 provides sufficient flexibility so that adequate sealing contact is provided in spite of variations in dimensions. At the top of the walls 10 of the sealing gasket is an outwardly projecting rim or flange 14 which rests on the upper end 15 of the container body. The rim 14 is of slightly larger diameter than the outside diameter of the cap 8 so that in removing the stopper, the rim forms a natural gripping surface and

2

the user has no tendency to grip the cap 8 and thereby possibly remove the cap from the sealing gasket. To further insure against removal of the cap from the sealing gasket, the inner surface of the gasket opposite the rim 14 is provided with a plurality of annular ribs 16 which are not primarily for the purpose of sealing, but are primarily for the purpose of insuring a tight fit of the cap 8 within the sealing gasket 11 so that the two will remain in assembled relation. The rim 14 on the sealing gasket is cut away at 17 to receive two upstanding wings 18 at opposite sides of the container body. These wings are molded integral with the body and have openings 19 which snap over catches 20 projecting outward from the cap 8. The wings 18 have sufficient flexibility so that they can be pushed outward off the catches 20, but will remain in place so as to prevent accidental removal of the stopper closure.

The sealing gasket 11 has a bottom wall 21 on which rests a piece of porous paper 22 which provides free access of air into the interior of the cap 8 through openings 23 in the wall 21. Prior to assembly, the cap 8 is filled with a desiccant 24 such as silica gel and when the cap is telescoped into the sealing gasket 11, the silica gel is kept within the cap by the porous paper 22. The silica gel keeps the air within the container dry and thereby provides proper storage conditions for the spark plugs. The condition of the silica gel can be observed through the cap which is ordinarily made of translucent polyethylene. Silica gel changes color as it absorbs moisture, being blue when dry, and white when no longer useful for absorbing moisture. To aid in determining when the silica gel is no longer useful, a piece of colored paper is placed so as to be visible through the cap. When the color of the silica gel corresponds to the colored paper, the silica gel is no longer useful. However, by baking in an oven, the silica gel can be reactivated without disassembling.

The side walls 10 of the sealing gasket 11 extend below the wall 21 and are shaped so as to grip and center the threaded ends of various sized spark plugs and at the same time to provide for free circulation of air from the interior of the container through the openings 23 to the silica gel housed within the stopper. The spark plugs having larger diameter threaded ends are received on shoulders 24 and are frictionally gripped by the depending arcuate sections 25 below the shoulders 24. There are slots 26 which extend through the lower ends of the walls 10 to a point slightly above the shoulders 24 so as

to provide spaces 27 through which air can circulate to and from the silica gel when the spark plugs with large diameter threaded ends are in place. The spark plugs with smaller diameter threaded ends are received against inwardly offset surfaces 29. Above the spaces 27, the slots 26 do not extend through the walls 10 but merely become grooves 26a radially outward of the surfaces 29 which provide for free circulation of air to the silica gel.

Because the container body is made of translucent material, it is possible to have an interior label carrying a legend identifying the spark plugs. This label can be made from heavy paper 30 and received in a recess 31 in the outer surface of the gasket 11. The legend-carrying paper 30 is below the portion of the gasket carrying the sealing ribs 13 and accordingly does not interfere with the sealing function.

This container will keep spark plugs in usable condition for a long period of time even if the container should be immersed in water. Furthermore, immersion can have no effect upon the internal label, which is visible through the side walls of the container, so that it is always possible to tell what spark plugs are in the container without opening. The condition of the spark plugs can be visually determined by the color of the silica gel visible through the top wall of cap 8. So long as the silica gel is blue or reddish, the spark plug is in suitable condition. The flexible wings 18 securely hold the stopper closure in place and prevent all but intentional opening of the container. The flexibility permits outward movement of the wings to clear the catches 20 so that the container can be quickly opened when desired. However, no amount of jarring will accidentally displace the wings so that the stopper closure can come out of the container body.

What I claim as new is:

1. In a spark plug container, a cylindrical body of impervious moistureproof material for receiving a hollow desiccant containing stopper closure for the uuper end of the body, said closure having a cup shaped member of resilient material such as rubber with an outwardly extending flange seated on the upper end of the body and with the side walls of the cup in sealing engagement with the inside of the body and the bottom of the cup presented toward the bottom of the body and provided with openings for circulation of the contents of the container into contact with the desiccant, said stopper having depending annular walls of resilient material such as rubber fitting over and gripping an end of the spark plug, and slots in said walls providing for the circulation of air.

2. In a spark plug container, a cylindrical body of a moistureproof plastic elastomer, a stopper closure for the body comprising a cup shaped cap telescoped into a cup shaped sealing gasket, the cap and gasket being in opposed relation and when telescoped providing a desiccant receiving cavity, the gasket having its bottom wall presented to the bottom of the body and its side walls in sealing engagement with the inside of the cylindrical body openings in the bottom walls of the gasket providing for circulation of air to the desiccant, and annular walls on the gasket depending around and centering one end of an inserted spark plug.

3. In a spark plug container, a cylindrical body of a moistureproof plastic elastomer, a stopper closure for the body comprising a cup shaped cap telescoped into a cup shaped sealing gasket, the cap and gasket being in opposed relation and when telescoped providing a desiccant receiving cavity, the gasket having its bottom wall presented to the bottom of the body, its side walls in sealing engagement with the inside of the cylindrical body openings in the bottom wall of the gasket providing for circulation of air to the desiccant, annular walls on the gasket depending around and centering one end of an inserted spark plug, said walls being internally stepped to receive plugs of varying diameters, and axial slots in the walls providing for circulation of air past the centered end of the spark plug.

4. In a container for elongated articles, a hollow cylindrical body of impervious moistureproof material, circumferentially spaced longitudinal ribs integral with and extending inwardly from the side of the body adjacent the bottom of the body for engaging and supporting one end of an inserted article in spaced relation to the side and bottom walls of the body, a hollow desiccant containing stopper closure fitting into the top of the body, said closure having on its inserted end openings for circulation of the container atmosphere into contact with the desiccant, and said stopper having on its inserted end longitudinally extending fingers circumferentially spaced around the inside of the body and providing an article receiving pocket spaced inward from the side walls of the body and from said openings in the closure.

5. In a container for elongated articles, a hollow cylindrical body of impervious moistureproof material, a stopper closure fitting into the top of the body, said closure having a cup shaped rubber member with an outwardly extending flange seated on the top of the body and with the side walls of the cup in sealing engagement with the inside of the body and with the bottom of the cup presented toward the bottom of the body and provided with air circulating openings, a complementary member fitting within the top of the cup shaped member and providing a desiccant receiving space, said cup shaped member having on its inserted end depending annular walls providing an article receiving pocket, and slots in said walls providing for the air circulation.

6. In a container for elongated articles, a hollow cylindrical body of moistureproof plastic elastomer, a stopper closure fitting into the top of the body, said closure comprising a cup shaped cap telescoped within a cup shaped sealing gasket of resilient material such as rubber, the cap and gasket being in opposed relation and when telescoped providing a desiccant receiving cavity, the gasket having its bottom wall presented to the bottom of the body and its side walls in sealing engagement with the inside of the cylindrical body, openings in the bottom wall of the gasket for circulation of the container atmosphere into contact with the desiccant, and annular walls on the gasket depending below its bottom wall and providing an article receiving pocket.

7. In a container for elongated articles, a hollow cylindrical body of moistureproof plastic elastomer, a stopper closure fitting into the top of the body, said closure comprising a cup shaped cap telescoped with a cup shaped sealing gasket of resilient material such as rubber, the cap and gasket being in opposed relation and when telescoped providing a dessicant receiving cavity, the gasket having its bottom wall presented to the bottom of the body and its side walls in sealing

engagement with the inside of the cylindrical body, openings in the bottom wall of the gasket for circulation of the container atmosphere into contact with the desiccant, and annular walls on the gasket depending below its bottom wall and providing an article receiving pocket, said walls being internally stepped to receive articles of varying diameters, and axial slots in the walls providing for circulation of air past the centered end of the article.

8. In a container, a hollow cylindrical body of moistureproof plastic elastomer, a stopper closure fitting into the top of the body, said closure having a cup shaped rubber member with an outwardly extending flange seated on the top of the body and with the side walls of the cup in sealing engagement with the inside of the body and with the bottom of the cup presented toward the bottom of the body and provided with air circulating openings, a complementary member fitting within the top of the cup shaped member and providing a desiccant receiving space, integral upstanding flexible wings at opposite sides of the top of the container body, said flange having notches receiving the wings, and catches on

said complementary member of the closure cooperating with the wings to releasably hold the closure against accidental removal.

References Cited in the file of this patent

UNITED STATES PATENTS

Number	Name	Date
929,842	Eckert	Aug. 3, 1909
1,049,903	Norton	Jan. 7, 1913
1,156,074	Hahn	Oct. 12, 1915
1,614,807	Stewart	Jan. 18, 1927
2,056,253	Carroll	Oct. 6, 1936
2,081,138	Andersen	May 25, 1937
2,396,491	Chamberlain	Mar. 12, 1946
2,466,875	Brandt	Apr. 12, 1949
2,546,599	Hicks	Mar. 27, 1951
2,548,168	Luce	Apr. 10, 1951
2,585,938	Jordan	Feb. 19, 1952

FOREIGN PATENTS

Number	Country	Date
2,626	Great Britain	1887
80,635	Sweden	Apr. 13, 1934
225,154	Great Britain	Nov. 27, 1924