April 18, 1967 K. E. SMITH 3,314,135

CRIMPING TOOLS AND DIES

Filed July 30, 1964 2 Sheets-Sheet 1

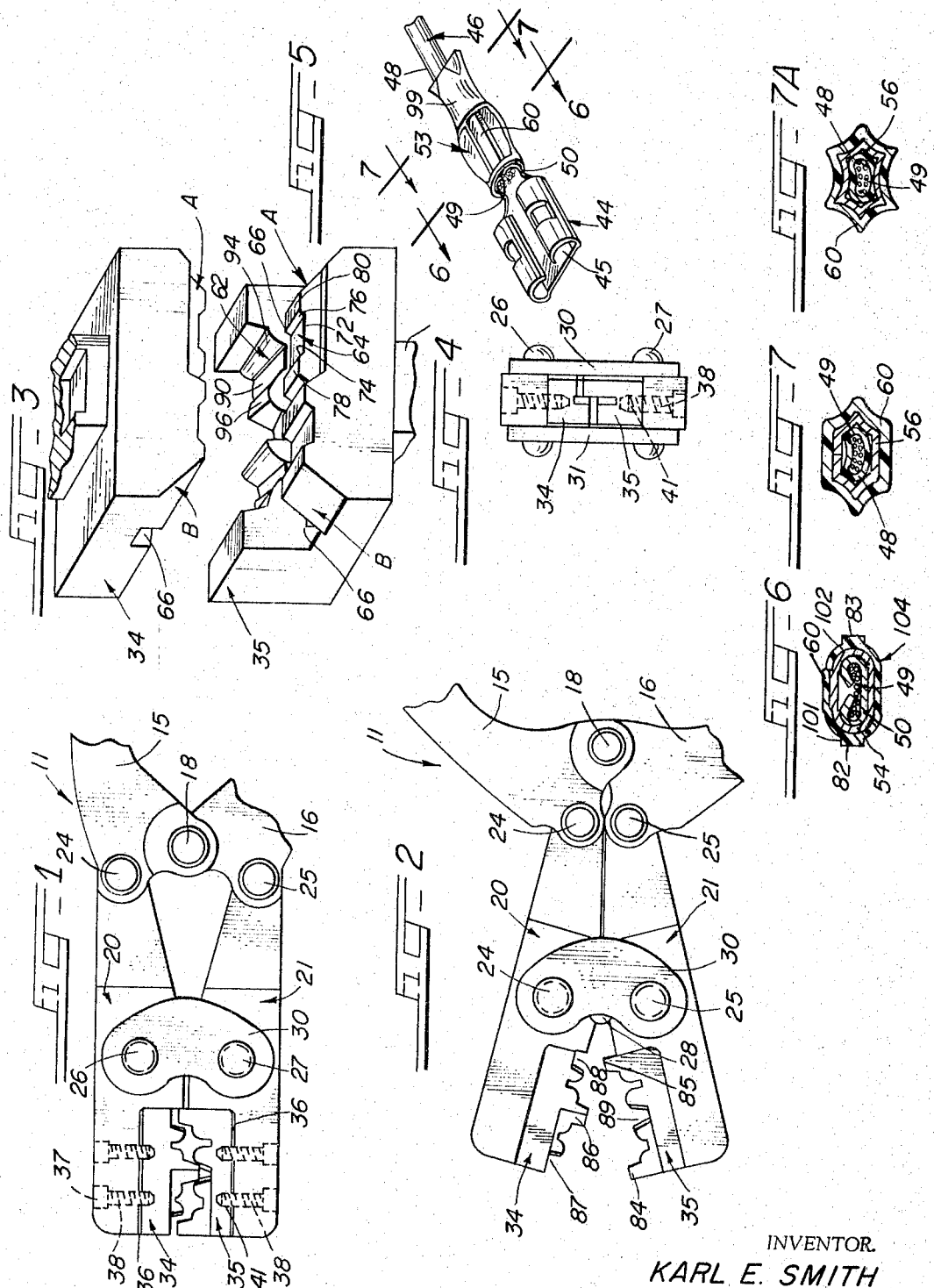

INVENTOR.
KARL E. SMITH
BY
Kegan, Kegan & Berkman
Attys.

April 18, 1967 K. E. SMITH 3,314,135

CRIMPING TOOLS AND DIES

Filed July 30, 1964 2 Sheets-Sheet 2

Fig. 8

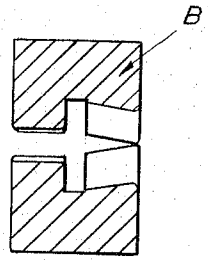

Fig. 9

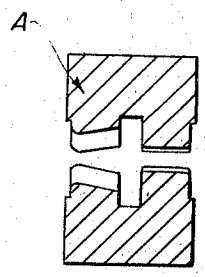

Fig. 10

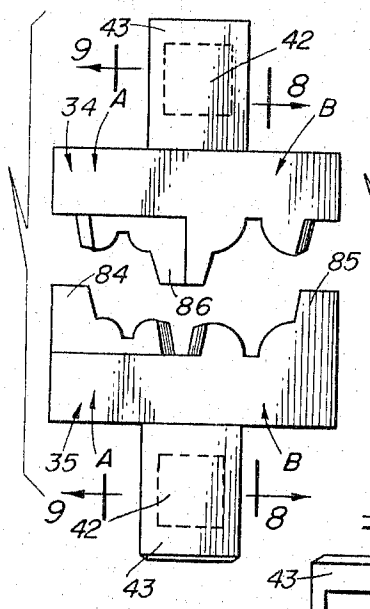

Fig. 11

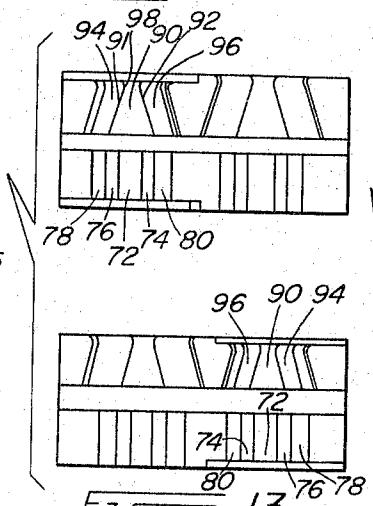

Fig. 12

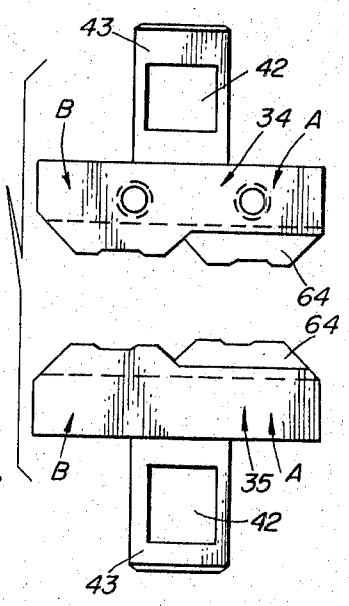

Fig. 13

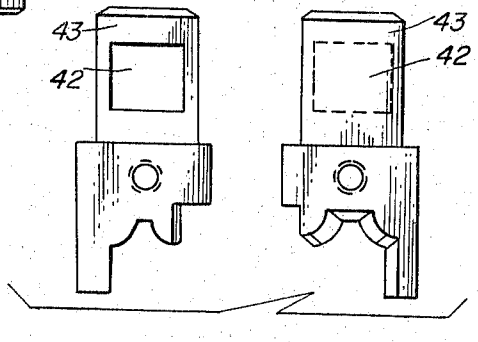

INVENTOR.
KARL E. SMITH
BY Kegan, Kegan & Berkman
Attys.

United States Patent Office 3,314,135
Patented Apr. 18, 1967

3,314,135

CRIMPING TOOLS AND DIES

Karl E. Smith, Twelve Mile, Ind., assignor to Vaco Products Company, Chicago, Ill.

Filed July 30, 1964, Ser. No. 386,364
14 Claims. (Cl. 29—203)

This invention relates to crimped electrical connections and to improved tools and dies for the formation thereof. More particularly, this invention pertains to improved dies for crimping electrical connectors of the type having ferrule portions adapted to receive conductors to be crimped thereto. The present invention contemplates making the crimped connection by crimping the connector in two spatially disposed sections, simultaneously, and with a single tool.

In the formation of electrical connections, it has been customary to enclose a wire end in an electrically conducting metal ferrule to which a terminal lug or other conducting member is or can be connected, or to enclose a plurality of wire ends in such a ferrule. In many installations it has become a preferred or required procedure to enclose such a connector-ferrule in a sleeve or cylindrical shell of plastic insulating material. With an insulated wire and its stripped end properly positioned in place, opposite sides of the assembly are pressed laterally toward each other to bring the metal ferrule into electrically conducting contact with the wire and to provide a mechanically strong connection with the conductor or the conductors.

Electrical connector assemblies covered or encased with plastic insulation and then compressed have not been altogether satisfactory. An important defect in the final structure is the weakening of the insulating sleeve as to cause dielectric breakdown. Dielectric breakdown has been found to be associated with fracture or with localized thinning of the insulating material during the crimping operation. This thinning is the result of localized extrusion or squeezing out of the plastic material from particular areas. Another cause of dielectric breakdown is physical penetration of the insulation by projections or sharp edges on the ferrule or on the crimping tool.

In order to produce a high quality electrical connection which is mechanically strong, which will resist tension forces, vibration, flexing, and torsion, and which will retain a high electrical conductivity over an extended period of time, graduations in crimping pressures exerted upon various surface areas of the outside of the ferrule must be maintained within reasonable limits, and maximum crimping pressures must not be unduly high. Shearing or puncturing of the wall of the ferrule must be avoided and yet the metals of the ferrule and the conductor must be forged together under the crimping pressures so as to produce a connection in which the ferrule and stripped or bared conductor are essentially integral. Where the ferrule is of the type that carries an external insulation sheath through which the crimping pressure is transmitted, the parameters of crimping pressure, crimping die configuration, and engineering design characteristics are particularly important in providing a well-insulated yet strong connection.

An important achievement of the present invention is that ordinarily antagonistic factors have been controlled and caused to cooperate to produce electrical connections having greatly improved conductive and mechanical quality.

A principal object of the invention is the provision of the improved crimping dies which provide electrical connections which are strong, durable, and of lasting high conductivity, which are effectively insulated against unintentional electrical contact, and which can be readily formed with extreme ease and economy.

Another object of the invention is to provide a crimping tool which is simple in construction, and which will minimize distortion of insulation during the crimping operation to provide a high degree of insulation over the entire crimped area.

Still another object of the invention is to provide crimping dies which will not damage or otherwise impair the effectiveness of the insulating sleeve or sheath during the crimping operation.

Another object of the invention is to provide crimping die configurations adapted to apply controlled pressure patterns along longitudinally spaced sections of an electrical connector to provide contiguous and firm contact and attachment of the metal ferrule to both the stripped end of the wire and to the insulated portion thereof.

Still another object of the invention is to provide crimping dies having two spatially disposed sections providing two distinct crimps, one of which is a substantially "confined crimp" while the other is an "unconfined crimp."

Another object of the invention is to provide a crimping tool whereby the compressive forces applied to the externally insulated ferrule are inconstant along the longitudinal extent of the ferrule and are proportional to ideal forces required to provide an effective bond between the ferrule and both the insulated wire and the bare or stripped portion of the wire or other conductor.

Additional objects and aims of the invention include the following:

To provide a crimping tool which will accommodate and which will function effectively with ferrules of several sizes and with ferrules coacting with a wide range of sizes of conductors, including solid and stranded wires and which will in all cases produce a crimp of superior strength and electrical continuity throughout the entire size range; to provide a crimping tool in which the crimping dies are readily replaced as desired; to provide a crimping tool in which mechanical stops obviate the application of excessive pressures to the ferrule or to the ferrule surrounded by an insulation sheath; to provide a crimping tool having dies which will not produce selective thinning of the insulation sheath during the crimping of the sheathed ferrule; to provide crimping dies which will produce a minimum of cold flow during the crimping operation; to provide a crimping tool carrying double sets of dies in which the inner set accommodates one size range of connectors and the outer set accommodates a different range of connector sizes; and to provide ferrule crimping dies which may be used in either hand tools or in bench tools and power tools.

Other and further objects and advantages of the invention will become apparent from a reading of the following specification taken in conjunction with the drawings.

Preferred embodiments of the invention are described in the specification and depicted in the accompanying drawings. It is to be understood that these embodiments are not intended to be exhaustive or limiting the invention, but are provided for the purpose of illustration only in order that others skilled in the art may fully understand the invention and the principles thereof and the manner of applying it in the various forms, each as may be suited to the conditions of a particular use.

In the drawing:

FIGURE 1 is a side elevational view of a hand tool embodying the invention;

FIGURE 2 is a side elevational view similar to FIGURE 1, but showing the jaws of the tool open;

FIGURE 3 is view in perspective showing the surfaces of the dies of the invention;

FIGURE 4 is an end view of a tool embodying the

invention and showing the jaws in substantially closed position;

FIGURE 5 is a perspective view of an electrical connector and conductor as crimped together by the dies of the invention;

FIGURE 6 is a cross-sectional view of the crimped connector and conductor, taken on the line 6—6 of FIGURE 5;

FIGURE 7 is a cross-sectional view of the crimped connector and conductor, taken on the line 7—7 of FIGURE 5;

FIGURE 7A is a cross-sectional view of the crimped connector and conductor, as formed by a modified die configuration.

FIGURE 8 is a cross-sectional view taken on the line 8—8 of FIGURE 10;

FIGURE 9 is a cross-sectional view taken on the line 9—9 of FIGURE 10;

FIGURE 10 is an end view of dual dies, one above the other, as viewed from the insulation crimping side of the tool;

FIGURE 11 is a plan view of the surfaces of the double set of dies;

FIGURE 12 is an end view of dual dies, one above the other, as viewed from the bare conductor crimping side of the tool; and

FIGURE 13 is an end view of a single set of dies, as viewed from that portion applied to the insulated region of the conductor.

In effectuating and achieving the aims and purposes of the present invention the dies of the crimping tool are formed to define laterally spaced dual die faces or surfaces which act, in conjunction with cooperating oppossing die faces or surfaces, upon two different portions of the connector assembly to achieve two related but different ends. One cooperating pair of the die faces defines, a "confining" die and the other pair of die faces defines a "non confining" die. The difference is due to the structural relationship of the parts. The entire outer periphery of the connector is engaged by or retained within the working or restraining surfaces of the confining die, at least during the final stage of crimping. In contrast, the non-confining dies merely bear upon opposite surfaces of the connector, and intermediate or lateral surfaces of the connector do not engage these dies. Thus, unconfined dies permit the connector and the enveloping sheath to be radially extruded upon crimping. The confining dies preclude radial extrusion by lateral confinement of the connector and of the enveloping sheath so that any extrusion of the connector or the sheath is in a longitudinal direction only.

Referring now to the drawings, and particularly to FIGURES 1, 2, and 4, for purposes of disclosure, the crimping tool of the invention is shown as embodied in a hand tool 11 particularly adapted for applying terminal connectors to insulated wire. A pair of handles 15 and 16 are pivotally connected to one another by means of a pin 18. In turn, the tool handles 15 and 16, respectively, are pivoted to jaws 20 and 21 by pins 24 and 25. The jaws 20 and 21 are pivoted on an aligning bearing 28 (FIGURE 2) and are pivotally connected together by pins 26 and 27 and laterally positioned links or plates 30 and 31 so that the jaws 20 and 21 can fulcrum against each other when acted upon by the handles. The bearing 28, being located in a recess of the jaws 20 and 21 as illustrated, is retained in position and axial displacement is precluded by the links 30 and 31.

The outer ends of the jaws 20 and 21 carry sets of composite double-acting crimping dies 34 and 35 which, in the preferred embodiment of the invention depicted, are readily replaceable. In the embodiment of the invention illustrated in FIGURE 1 the dies are secured in corresponding jaws 20 and 21 of the tool 11 by means of bolts 37 which pass through openings 38 in the jaws and which screw into screw threaded openings 41 formed in the dies 34 and 35. Shims 36 may be used to provide

any degree of ultimate proximity of the dies upon closure of the jaws. Thus, the dies 34 and 35 may be very quickly and simply applied to the tool and removed therefrom when it is desired to substitute or to replace dies for any reason. Many other expedients may be used to removably secure the dies in the jaws of either a hand tool or a bench tool. As depicted in FIGURES 3, 10, and 12, attachment may be by means of mechanical couplings such as slots 42 and cooperating pins or bars (not shown). The slots 42 are formed in blocks 43 integral with the tool jaws.

Upon examination of the linkage structure depicted in FIGURES 1 and 2, it will be readily apparent that as the handles 15 and 16 are moved toward one another about the axis of pin 18, pins 24 and 25 are moved away from one another and, with them, the adjacent ends of the jaws 20 and 21. Since the pins 26 and 27 are maintained in a predetermined fixed spaced relationship by links 30 and 31, the movement of the ends of the jaws 20 and 21 is a rocking movement whereby the crimping dies 34 and 35 carried by the jaws are moved toward one another.

In a preferred embodiment of the invention the crimping tool is used for applying a connector 44, having a terminal contact ring, band, tongue or clip 45, to an insulated conductor 46, as illustrated in FIGURE 5. In this use the insulation 48 is first stripped off for a short distance from the end of the conductor 46 to bare the end 49. The connector 44 itself includes an integral conductor contacting portion or barrel 50 telescoped over and crimped to the bare end 49 of the electrical conductor 46. A ferrule 53, which includes metallic sleeve 54, surrounds the conductor crimping portion 50 of the connector 44 and is crimped therearound. Integral with and extending longitudinally of the conductor crimping sleeve 54 of the ferrule 53 is a second tubular section 56 which is preferably of a somewhat larger diameter than the conductor crimping sleeve 54.

This tubular section 56 is adapted to receive, support, and crimp the insulated portion of the conductor 46. The ferrule 53 may be closed or open at the end next to the tongue or contact portion 45 and may be seamless or rolled. Either a single, a stepped ferrule, or a ferrule with an overlying sleeve may be used. Surrounding the metal ferrule 53 is an insulation sheath 60 secured to the ferrule either by a friction grip therebetween enhanced by the elasticity of the sheath 60 or by suitable bonding cement, or otherwise. Attachment of the ferrule 53 to the connector 44 and to the conductor 46 is made by applying the crimping forces through the insulation sheath 60 onto the ferrule and the conductor therein.

As indicated in FIGURES 1–3 and 8–12, in a preferred embodiment of the invention the dies 34 and 35 of the crimping tool include two complete and independent sets of crimping members A and B carried by the cooperating jaws of the crimping tool. These two sets of dies are equivalent in form and in function and differ only in their physical dimensions, whereby they are adapted to accommodate and to act upon connectors and conductors of different sizes. The following discussion will be with respect to one set A of these dies, it being understood that the description applies equally well to the second set B corresponding parts of which carry the same numerical designation. It is apparent that, if preferred, the tool may incorporate only a single set of cooperating dies (FIGURE 13). It is also to be understood that the dies of the invention may be held in a bench tool or press for automatic operation, as well as in the jaws of the hand tool.

Considering now a given single set of crimping dies 34 and 35, it will be seen that the two die faces or surfaces 62 and 64 (FIGURE 3) carried by each of the upper and lower jaws 20 and 21 of the tool comprise two laterally spaced configurations separated by a space or recess 66. One configuration 64 is adapted to compress or crimp the barrel 50 of the connector 44 and the fer-

rule sleeve **54** onto the bared end **52** of the insulated conductor **46**. The other die configuration **62** differs from the first in form and is adapted to crimp the ferrule sleeve **56** onto the insulated portion of the conductor **46**. While the two configurations differ from each other in physical form and cross-section, each die constitutes a female nest die the opposing cooperating portions of which are in each case substantially identical. In the preferred embodiment of the die configuration depicted, each of the die faces includes at least three principal surfaces.

As shown in FIGURES 3 and 10–13, the working surfaces of the die **64** which crimps the connector **44** onto the bare conductor **49** define a saddle or trough comprising a central or base portion **72** which is substantially flat and two diverging sidewall portions **74** and **76** each substantially planar and each extending laterally of peripheral side edges of the central or base portion **72**. The conductor crimping dies **64** are of the "non-confining" type and, in a preferred embodiment, include parallelly disposed flat surfaces **78** and **80**. In other embodiments of the invention these surfaces may be dispensed with. In use, the conductor crimping portion **54** of the ferrule is received within the nests defined by cooperating die faces **64** of the conductor crimping dies and the opposing surfaces of these dies are caused to approach each other to bear upon opposite surfaces of the connector. Since the faces or flat surfaces **78** and **80** of the dies also bear against the connector, intermediate surfaces or lateral surfaces **82** and **83** (FIGURE 6) of the connector of ferrule formed during the crimping operation are unconfined and may, to some extent, be radially extruded. From a consideration of the configuration of these crimping dies, it is apparent that the cross-sectional configuration of the resultant crimped connector is essentially either hexagonal or octagonal. The dimensions of the dies relative to the dimension of the ferrule being acted upon and the provision of mechanical stops **84**, **85**, and **86** and cooperating recesses **87**, **88**, and **89** obviate uncontrolled extrusion of the ferrule and its insulating sheath laterally of the die element.

As illustrated schematically in FIGURE 1, with the jaws **20** and **21** substantially in a closed position the guides or stops **84**, **85**, and **86** do not necessarily seat completely in the opposed corresponding recesses **87**, **88**, and **89**. For this open disposition of the dies the nest cavities are somewhat larger than in the case of full seating and mating of the cooperating dies. Adjustment of the degree or extent of die closure is achieved by the insertion of one or more shims or spacers **36** between the dies and the jaws or by removal of one or more spacers.

Referring now to that portion **62** of the dies which acts to crimp over the insulated conductor **46**, and as illustrated in FIGURES 1–3 and 8–13, in a preferred embodiment of the invention the die surfaces which impress or crimp upon the plastic ferrule-insulating sleeve **60** extending over the permanent insulation **48** of the electrical conductor **46** define a crimp which in cross-sectional representation appears roughly in the shape of a hexagon (FIGURES 7 and 7A) and which in structure takes the form of a prism or the frustum of a modified hexagonal pyramid. Each of the die faces **62** which cooperate to produce the modified pyramidal crimping configuration comprises three distinct surfaces. In a preferred embodiment of the invention the dies **62** each include a center flat or planar surface **90** which is generally trapezodial in shape and which is flanked on either of its longitudinal lateral sides or edges **91** and **92** by a pair of elongated tapering curved or conical surfaced sections **94** and **96** coextensive with the center surface **90** with respect to the peripheral longitudinal edges thereof and presenting generally inwardly projecting convex surfaces which flare rearwardly and outwardly toward the die surfaces **64** which crimp the connector to the stripped wire portion **49** of the conductor **46**.

In another preferred embodiment of the invention the center or base surfaces **90** of the die faces crimping the insulated portion **48** of the conductor **46** are curved to provide inwardly facing convex surfaces. All of the conic segments are disposed so that their ends adjacent the conductor crimping dies **68** bridge or subtend longer chords than do the opposite or outside ends of the conic segments. In a preferred embodiment of the invention the ends of the conical segments which subtend the shorter cords have the smaller radii of curvature. While this particular configuration is preferred, other arrangements are within the inventive concept and the larger radii may be at the "smaller" ends of the "conical" segments. It is also contemplated that one or more of the small end portions of the walls may be planar or may even be reversely curved with reference to the opposite end of the particular die surface. In such instances there would be an inflection in that die surface.

In preferred embodiments of the insulated conductor crimping portions **62** of the dies of the invention, the base walls or center walls **90** of each of the opposing three-walled nests are generally trapezoidal in form. The ends of the base wall **90** and of the side walls **94** and **96**, particularly at the smaller end of the modified pyramid, are preferably flared **98** to eliminate sharp edges which might cut the insulation **48** of the conductor **46**. As still another variation in the insulation crimping die portion of the tool of the invention one or more surfaces of the nest may be formed to subtend a minimum chord at a position removed an appreciable distance from either end of the wall surface so that the overall nest cavity defined by the two cooperating dies is most constricted at an intermediate longitudinal position and constitutes a doubly diverging opening or passage resembling an "hour glass" **99** in form.

The unique configuration of the die surfaces **62** which bear upon the connector **44** rearwardly of that portion **50** receiving the stripped wire element is specially adapted to the crimping of a plastic sleeve **60** and, through it, an enclosed metal ferrule **56** and at least one electrical wire or other conductor **49**, with sufficient force to flow the metal or to form the metal to provide a physically strong electrical connection of lasting high conductivity. At the same time the operation is carried out without extensive cold flow thinning of the insulation sheath **60** or serious weakening of its strength. The crimping tool may also be used advantageously for the crimping of metal ferrules or sleeves without a surrounding plastic sleeve. Thus, through the use of the crimping device of the invention, the ferrule remains strong and unbroken and the plastic sleeve is evenly distributed without puncturing or without producing dangerously thin or weakened portions.

As the dies **62** which crimp the connector **44** onto the insulated conductor **46** are moved together, they first contact the insulation sheath or sleeve **60** at a position adjacent that portion **54** of the ferrule **53** which is crimped over the stripped wire of the conductor. As the jaws of the crimping tool close, pressure deforms the connector to conform to the configuration of the combination arcuate and straight wall modified hexagonal dies, and as closure of the jaws is completed, the flat upper and lower surfaces **90** and the convex surfaces **94** and **96** of the dies bear against the insulated connector over ever-increasing areas and with pressures which decrease gradually along the extending line of contact.

Advantageously, the length of the die surfaces longitudinally of the conductor, and consequently of the crimped band formed thereby, is not less than the length of the metal ferrule to be crimped. The lateral dimension or width of the die surfaces, that is, the horizontal dimension of the area confined by the die surfaces between the stops **84** and **86** or **85** and **86** is approximately

the diameter of the connector assembly prior to crimping, although it should ordinarily be enough greater than this diameter to provide clearance for easy insertion of the connector assembly into the nests of the die.

The crimping tool of the invention applies two "crimps" simultaneously. The crimp over the bared conductor is of the unconfined type and provides an ultimate crimp which is somewhat flat and has a cross-section which is generally hexagonal or octagonal in form (FIGURE 6). The second crimp which is spatially disposed from but essentially coaxial with the first crimp is of the confined type and produces an ultimate crimp which in cross-section is in the form of a modified hexagon and which in a preferred embodiment of the invention has two opposed flat sides and four intermediate arced or curved sides (FIGURE 7). The opening defined by the mating or cooperating dies is in the form of a truncated pyramid having two opposed planar surfaces **90** and four intermediate conical surfaces **94** and **96**.

As has been previously set forth, the crimping tool of the invention is provided with two complete die sets A and B which differ from each other only in their physical dimensions. The particular pair of cooperating die surfaces to be used in a given crimping operation is selected in accordance with the size of the ferrule to be crimped and, ordinarily, the preferred relationship is achieved by selecting that pair of dies having a transverse width approximately equal to the diameter of the particular ferrule. Regardless of the pair of crimping dies selected, the cooperating die surfaces act to impress a double crimp into the ferrule.

The trough-shaped relatively shallow dish-like die surfaces, along with the flanking flat die surfaces, serve to engage, support, and crimp the ferrule onto the stripped end of the conductor. As illustrated in FIGURE 6, shallow flat crimped areas **101** and **102** are formed by the flat die surfaces **78** and **80** and convex crimped areas **104** are formed by the concave trough-forming dies surfaces **72**, **74**, and **76**.

The invention has been described in connection with one type of tool, a hand tool. Obviously other types might equally well incorporate the crimping dies of the invention. For example, the dies may be incorporated in a pedal operated or power operated die press.

To prevent shearing of a connector or of the insulation sheath or sleeve of the connector by reason of sharp edges, in preferred embodiments of the invention the edges of all working faces of all die members are advantageously chamfered or rounded to reduce localized shear loads.

In use, the upper and lower dies or members **34** and **35** are secured to opposing jaws of a hand tool or to holders in a power tool. An insulated connector having a bared end of a conductor inserted in the barred portion is positioned to seat in the dies with the barrel in the conductor crimping die nest **64** and with the insulated skirt or sleeve portion of the connector seated in the insulation crimping nest **62**. When the dies are brought together they cooperate to crimp the ferrule onto the connector and onto the insulated conductor.

The foregoing description and the drawings are given merely to explain and illustrate the invention, and the manner in which it may be performed, and the invention is not to be limited thereto except in so far as the appended claims are so limited since those skilled in the art who have this disclosure before them will be able to make modifications and variations therein without departing from the scope and spirit of the invention.

What is claimed is:

1. In a tool for crimping a ferrule of an electrical connector onto an insulated conductor having a bared conductor portion, a set of ferrule crimping dies, each said dies comprising a first section constituting a bared conductor crimping section and a second section constituting an insulated conductor crimping section,

each said bared conductor crimping section defining an open ended relatively shallow trough-shaped nest having a substantially planar base and a pair of symmetrically disposed side walls integral with said base and diverging outwardly from longitudinal lateral edges thereof,

each said insulated conductor crimping section defining an open ended ferrule receiving nest having a base and a pair of symmetrically disposed side walls flared rearwardly and outwardly toward said bared conductor crimping section, said flared side walls defining inwardly directed convex surfaces.

2. In a tool for crimping a ferrule of an electrical connector onto an insulated conductor having a bared conductor portion, a set of ferrule crimping dies each said dies comprising a first section constituting a bared conductor crimping section and a second section constituting an insulated conductor crimping section,

each said bared conductor crimping section defining an open ended relatively shallow trough-shaped nest having a substantially planar base and a pair of symmetrically disposed side walls integral with said base and diverging outwardly from longitudinal lateral edges thereof,

each said insulated conductor crimping section defining an open ended ferrule receiving nest having a base and symmetrically disposed rearwardly and outwardly flared side walls presenting radially inwardly directed convex surfaces,

said ferrule receiving nest having a variable width and a variable depth.

3. In a tool for crimping a ferrule of an electrical connector onto an insulated conductor having a bared conductor portion, a set of ferrule crimping dies, each said dies comprising a first section constituting a bared conductor crimping section and a second section constituting an insulated conductor crimping section,

each said bared conductor crimping section defining an open ended relatively shallow trough-shaped nest having a substantially planar base and a pair of symmetrically disposed side walls integral with said base and diverging outwardly from longitudinal lateral edges thereof,

each said insulated conductor crimping section defining an open ended ferrule receiving nest having a base and symmetrically disposed side walls extending outwardly of said base and presenting inwardly directed convex surfaces,

said side walls of said conductor crimping section defining with said base of said bared conductor crimping section an open ended three-walled trough whose central wall is variable in width.

4. In a dual crimping tool for crimping a ferrule onto a stripped end of an electric wire and for simultaneously crimping said ferrule onto an insulated portion of said wire adjacent said stripped end, and including two handle members connected near one end by an axially fixed pivot,

a pair of jaws pivotally mounted on parallel spaced apart axes,

a pair of opposed links on opposite sides of said jaws and connecting corresponding ends of said spaced apart axes,

and pin means pivotally connecting opposite ends of said jaws to said handle members, the improvement which comprises:

combination conductor and insulation crimping dies carried on corresponding free ends of said jaws,

said crimping dies comprising a first pair and a second pair of spaced complementary die surfaces adapted upon manipulation of said handle members to effect simultaneous crimping of said ferrule onto said stripped end and onto said adjacent insulated portion of said wire,

each of said first pair of said die surfaces defining a shallow open-ended trough-like recess formed by a

flat rectangular base wall flanked by a pair of symmetrically disposed rectangular side walls joined to said base wall along opposed longitudinal peripheral edges thereof and diverging outwardly therefrom,
each of said second pair of said die surfaces defining an open-ended trough of varying depth and width from end to end,
said trough comprising a base,
a pair of symmetrically disposed substantially conical wall segments joined to opposed longitudinal edges of said base and extending outwardly therefrom to present inwardly facing convex conic surfaces,
each said conical wall segment defining a surface having progressively varying radii of curvature in a direction extending along a longitudinal axis of said conical segment and correlated with varying lengths of arc of transverse sections of said conical segments.

5. In a dual crimping tool for crimping a ferrule onto a stripped end of an electric wire and for simultaneously crimping said ferrule onto an insulated portion of said wire adjacent said stripped end, and including two handle members connected near one end by an axially fixed pivot,
a pair of jaws pivotally mounted on parallel spaced apart axes,
a pair of opposed links on opposite sides of said jaws and connecting corresponding ends of said spaced apart axes,
and pin means pivotally connecting opposite ends of said jaws to said handle members, the improvement which comprises:
combination conductor and insulation crimping dies carried on corresponding free ends and said jaws,
said crimping dies comprising a first pair and a second pair of spaced complementary die surfaces adapted upon manipulation of said handle members to effect simultaneous crimping of said ferrule onto said stripped end and onto said adjacent insulated portion of said wire,
each of said first pair of said die surfaces defining a shallow open-ended trough-like recess formed by a flat rectangular base wall flanked by a pair of symmetrically disposed rectangular side walls joined to said base wall along opposed longitudinal peripheral edges thereof and diverging outwardly therefrom,
each of said second pair of said die surfaces defining an open-ended trough of varying depth and width from end to end,
said trough comprising a planar elongated trapezoidal base,
a pair of symmetrically disposed substantially conical wall segments joined to opposed longitudinal edges of said base and extending outwardly therefrom to present inwardly facing convex conic surfaces,
each said conical wall segment defining a surface having progressively decreasing radii of curvature in a direction extending along a longitudinal axis of said conical segment and away from said first pair of said die surfaces correlated with progressively decreasing lengths of arc of transverse sections of said conical segments as measured in a direction from a wider end of said trapezoidal base of said trough to a narrower end thereof.

6. In a tool for crimping ferrule type electrical connectors onto conductors, the combination with a pair of jaws, and means for urging said jaws toward and away from each other, of dual acting conductor and insulation crimping dies carried on facing surfaces of said jaws,
said crimping dies comprising a first pair and a second pair of spaced complementary die surfaces adapted upon approaching each other to effect simultaneous crimping of said ferrule onto said stripped end and onto said adjacent insulated portion of said wire,
each of said first pair of said die surfaces defining a shallow open-ended trough-like recess formed by a flat rectangular base wall flanked by a pair of symmetrically disposed rectangular side walls joined to said base wall along opposed longitudinal peripheral edges thereof and diverging outwardly therefrom,
each of said second pair of said die surfaces defining an open-ended trough of varying depth and width from end to end,
said trough comprising a base,
a pair of symmetrically disposed substantially conical wall segments joined to opposed longitudinal edges of said base and extending outwardly therefrom to present inwardly facing convex conic surfaces,
each said conical wall segment defining a surface having progressively varying radii of curvature in a direction extending along a longitudinal axis of said conical segment correlated with varying lengths of arc of transverse sections of said conical segments.

7. In a tool for crimping ferrule type electrical connectors onto conductors and including a pair of jaws, and means for urging said jaws toward and away from each other, the improvement which comprises:
a pair of dual double acting cooperable dies, one of said dual dies disposed on each of said jaws,
each said dies comprised of a discrete first and a second principal section, said first section comprising a shallow trough-shaped open-ended recessed work-forming portion,
said second section extending coaxially of said first section and comprising a recessed work receiving nest of a generally bell-shaped cross sectional configuration and presenting rearwardly converging walls extending rearwardly and outwardly of said trough-shaped work-forming portion,
said converging walls comprising a substantially planar trapezoidal base and a pair of symmetrically disposed outwardly arched inwardly facing convex walls of progressively decreasing radii of curvature extending upwardly and outwardly of lateral longitudinal edges of said base,
in a closed position of said jaws carrying said dies, a cooperating pair of said second principal sections disposed in opposed facing cooperating coaction defining in cross section a modified generally hexagonal polygon having three axes of symmetry and comprising two opposed planar sides and four curved sides arched inwardly and disposed in two pairs connecting corresponding opposed ends of said two planar sides.

8. In a tool for crimping ferrule type electrical connectors onto conductors and including a pair of jaws, and means for urging said jaws toward and away from each other, the improvement which comprises:
a pair of dual double acting cooperable dies, one of said dual dies disposed on each of said jaws,
each said dies comprised of a discrete first and a second principal section, said first section comprising a shallow trough-shaped open-ended recessed work-forming portion,
said second section extending coaxially of said first section and comprising a recessed work receiving nest of a generally bell-shaped cross sectional configuration and presenting rearwardly converging walls extending rearwardly and outwardly of said trough-shaped work-forming portion,
said converging walls comprising a substantially planar trapezoidal base and a pair of symmetrically disposed outwardly arched inwardly facing convex walls of progressively decreasing radii of curvature extending upwardly and outwardly of lateral longitudinal edges of said base,
said jaws carrying said dies forming in a closed position a cavity defining a modified frusto hexagonal pyramid comprising two opposed trapezoidal planar walls and four curved conical walls, said conical walls presenting inwardly extending convex surfaces and disposed in pairs connecting corresponding peripheral

longitudinal edges of said opposed trapezoidal walls.

9. A tool for crimping an insulation-sheathed ferrule onto an insulated conductor having a stripped end, said tool comprising:

two members connected near one end by an axially fixed pivot with jaw portions on one side of the pivot and elongated handle portions on the other side of the pivot,

opposed combination dies carried by said jaw portions adjacent said pivot and adapted to coact with one another on manipulation of the handle portions to effect a crimping action on said ferrule when said ferrule is operatively positioned between said jaw portions,

each said dies including a wire clamping portion and an insulation gripping portion spaced longitudinally of one another and transverse the axes of said jaw portions,

each said wire clamping portion defining a shallow trough-like recess for receiving that portion of said ferrule enveloping said stripped end of said conductor extending longitudinally therein,

each said insulation gripping portion comprising a die press of the type whose opposing work die faces are defined by three sided recesses coacting when said jaw portions are closed to form a through passage substantially hexagonal in cross-section,

said passage formed by said three sides recesses tapering inwardly in a direction away from said wire clamping portion to define a frusto pyramidal channel,

cross-sections cut through said passage transversely of the longitudinal axis of said passage having gradually decreasing areas.

10. A tool for crimping an insulation sheathed ferrule onto an insulated conductor having a stripped end, said tool comprising:

two members connected near one end by an axially fixed pivot with jaw portions on one side of the pivot and elongated handle portions on the other side of the pivot,

opposed combination dies carried by said jaw portions adjacent said pivot and adapted to coact with one another on manipulation of the handle portions to effect a crimping action on said ferrule when said ferrule is operatively positioned between said jaw portions,

each said dies including a wire clamping portion and an insulation gripping portion spaced longitudinally of one another and transverse the axes of said jaw portions,

each said wire clamping portion defining a shallow trough-like recess for receiving that portion of said ferrule enveloping said stripped end of said conductor extending longitudinally therein,

each said insulation gripping portion comprising a die press of the type whose opposing work die faces are defined by three sided recesses coacting when said jaw portions are closed to form a through passage substantially hexagonal in cross-section,

said passage defined by said insulation gripping die press tapering rearwardly and inwardly of said wire clamping portion of said opposed dies to provide a frusto pyramidal ferrule receiving open-ended nest bounded by a pair of opposed upper and lower divergent planar trapezoidal walls and two pairs of symmetrically disposed rearwardly extending conical surface sections constituting side walls connecting corresponding longitudinal peripheral edges of said upper and said lower trapezoidal walls,

cross-sections cut through said passage transversely of the longitudinal axis of said passage having gradually decreasing areas.

11. In a tool for crimping an insulation sheathed ferrule onto an insulated conductor having a stripped end, the combination with a pair of jaws and means for urging said jaws toward and away from each other of a pair of dies carried by said jaws and adapted to coact with one another upon approach of said jaws toward one another to effect a crimping action on said ferrule when said ferrule is operatively positioned between said dies,

each said dies including a wire clamping portion and an insulation gripping portion spaced longitudinally of one another and transverse the axes of said jaw portions,

each said wire clamping portion defining a shallow trough-like recess for receiving that portion of said ferrule enveloping said stripped end of said conductor extending longitudinally therein,

each said insulation gripping portion comprising a die press of the type whose opposing work die faces are defined by three sided recesses coacting when said jaw portions are closed to form a through passage substantially hexagonal in cross-section,

said passage formed by said three sided recesses tapering inwardly in a direction away from said wire clamping portion to define a frusto pyramidal channel,

cross-sections cut through said passage transversely of the longitudinal axis of said passage having gradually decreasing areas.

12. The structure of claim 11 further characterized by and including abutting surfaces on opposed dies, said abutting surfaces comprising mechanical stops adapted to contact upon approach of said dies toward one another to limit the compression of said ferrule upon closure of said jaws.

13. The tool of claim 11 and further comprising removable and adjustable shim means disposed between a jaw of said tool and a crimping die carried on said jaw; whereby the closeness of approach of said crimping dies toward one another during manipulation of said handles may be readily controlled and regulated.

14. In a tool for crimping a ferrule of an electrical connector onto an insulated conductor having a bared conductor portion, a set of ferrule crimping dies, each said dies comprising a first section constituting a bared conductor crimping section and a second section constituting an insulated conductor crimping section,

each said bared conductor crimping section defining an open ended relatively shallow trough-shaped nest having a substantially planar base and a pair of symmetrically disposed side walls integral with said base and diverging outwardly from longitudinal lateral edges thereof,

each said insulated conductor crimping section defining an open ended ferrule receiving nest having a trapezoidal base and a pair of uotwardly extending trapezoidal side walls disposed one at each side of said base and joined thereto at longitudinal lateral edges thereof,

a set of crimping sections of said dies forming in opposed proximate facing disposition a through opening defining a truncated hexagonal pyramidal channel.

References Cited by the Examiner

UNITED STATES PATENTS

2,411,838	11/1946	Swengel	29—203
2,684,003	7/1954	Klinger	29—203
2,684,004	7/1954	Holtzapple	29—203
3,075,198	1/1963	Over	29—212

JOHN F. CAMPBELL, *Primary Examiner.*

THOMAS H. EAGER, *Examiner.*

UNITED STATES PATENT OFFICE

CERTIFICATE OF CORRECTION

Patent No. 3,314,135 April 18, 1967

Karl E. Smith

It is hereby certified that error appears in the above numbered patent requiring correction and that the said Letters Patent should read as corrected below.

Column 1, line 48, for "graduations" read -- gradations --; column 3, line 34, for "oppossing" read -- opposing --; line 37, for "defines," read -- defines --; column 4, line 45, for "friction" read -- frictional --; column 12, line 55, for "uotwardly" read -- outwardly --.

Signed and sealed this 9th day of January 1968.

(SEAL)
Attest:

Edward M. Fletcher, Jr.
Attesting Officer

EDWARD J. BRENNER
Commissioner of Patents