Sept. 27, 1966 J. D. BEREZANSKY ET AL 3,275,011

MAGNETIC AND SPEED RESPONSIVE FLOW DEVICE

Filed July 31, 1964 2 Sheets-Sheet 1

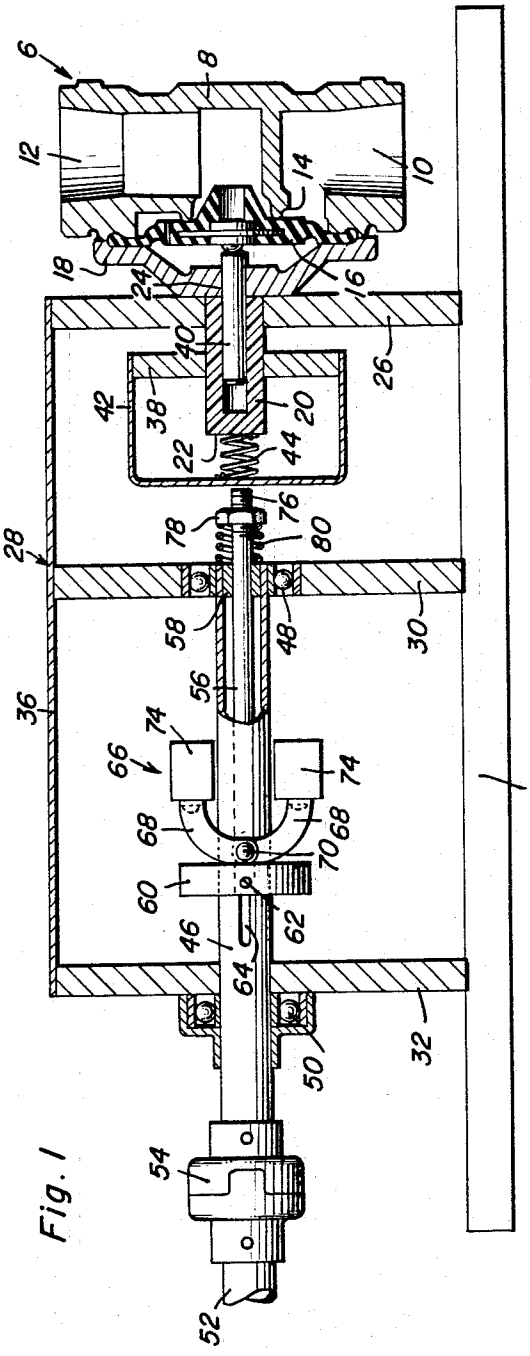

Fig. 1

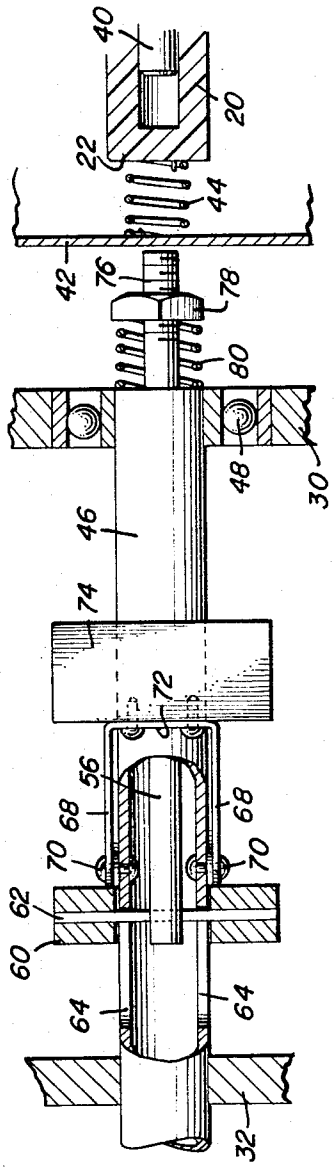

Fig. 3

John D. Berezansky
George G. Gdovichin
INVENTORS

BY Clarence A. O'Brien and Harvey B. Jacobson
Attorneys

Sept. 27, 1966 J. D. BEREZANSKY ET AL 3,275,011

MAGNETIC AND SPEED RESPONSIVE FLOW DEVICE

Filed July 31, 1964 2 Sheets-Sheet 2

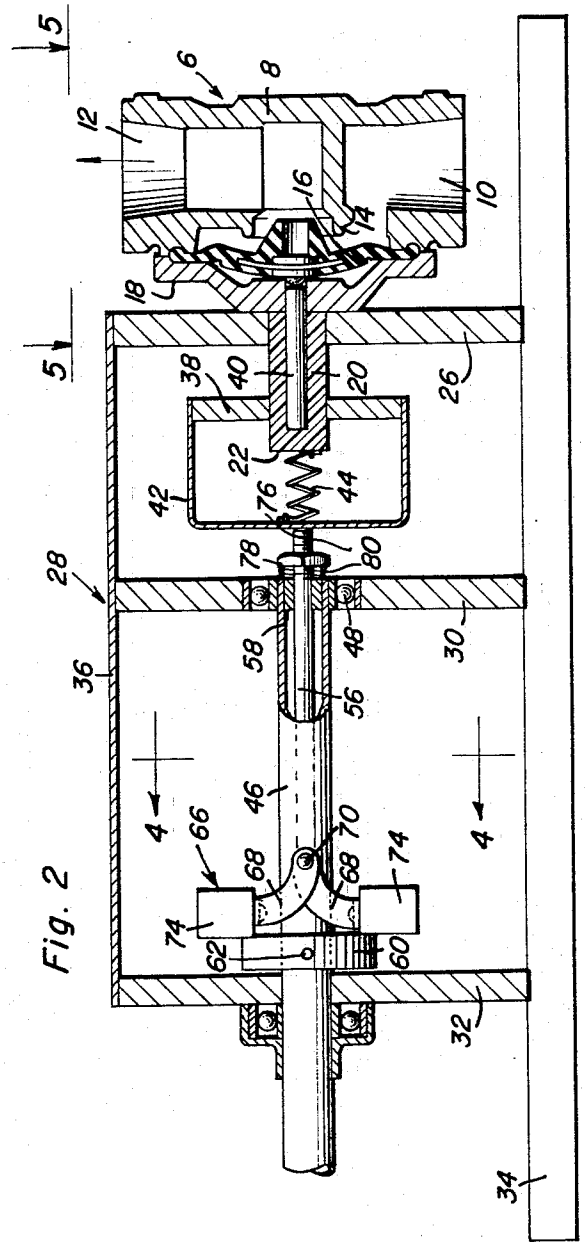

Fig. 2

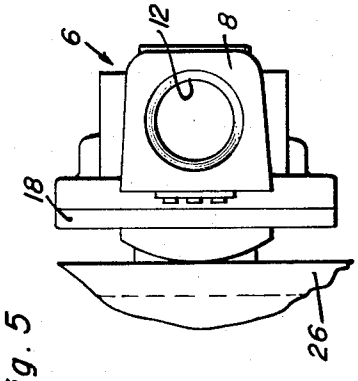

Fig. 5

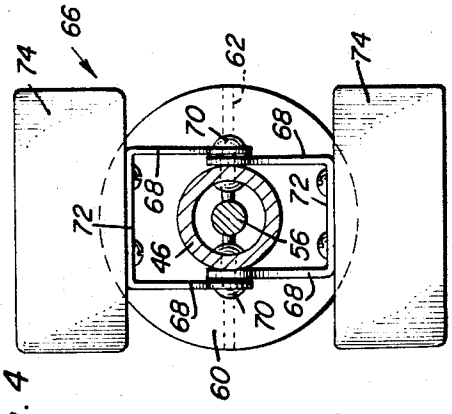

Fig. 4

John D. Berezansky
George G. Gdovichin
INVENTORS

BY Clarence A. O'Brien and Harvey B. Jacobson
Attorneys

United States Patent Office 3,275,011 Patented Sept. 27, 1966

3,275,011

MAGNETIC AND SPEED RESPONSIVE FLOW DEVICE

John D. Berezansky, Mineral Point, and George D. Gdovichin, Ebensburg, Pa., assignors to Jabco., Inc., a corporation of Pennsylvania

Filed July 31, 1964, Ser. No. 386,536
10 Claims. (Cl. 137—53)

The present invention relates to new and useful improvements in control valves particularly for liquid, air and other fluids and has for its primary object to provide, in a manner as hereinafter set forth, a valve of this character which is operable by means comprising a permanent magnet, thus obviating the use of electrical energy.

Another highly important object of this invention is to provide an improved fluid valve of the character described wherein the permanent magnet is operable in response to the action of centrifugal force.

Still another important object of the present invention is to provide an improved valve of the character set forth which is substantially leakproof.

Other objects are to provide an improved fluid valve which is simple in construction, strong, durable, compact, of light weight and which may be manufactured at low cost.

These together with other objects and advantages which will become subsequently apparent reside in the details of construction and operation as more fully hereinafter described and claimed, reference being had to the accompanying drawings forming a part hereof, wherein like numerals refer to like parts throughout, and in which:

FIGURE 1 is a view in vertical longitudinal section through an embodiment of the present invention, showing the valve closed;

FIGURE 2 is a view substantially similar to FIGURE 1 but showing the valve in open position;

FIGURE 3 is a fragmentary view in top plan of the mechanism with portions shown in horizontal section;

FIGURE 4 is a cross-sectional view, taken substantially on the line 4—4 of FIGURE 2; and

FIGURE 5 is a plan view, looking at the valve unit from the line 5—5 of FIGURE 2.

Referring now to the drawing in detail, it will be seen that the reference numeral **6** generally designates a valve unit of the diaphragm type. The valve unit **6** includes a body **8** comprising inlet and outlet openings **10** and **12**, respectively, together with a seat **14** with which a normally open diaphragm valve **16** is engageable. The diaphragm valve **16** has its marginal portion secured as usual between the body **8** and a cap member **18** thereon. Mounted centrally on the cap **8** and fixedly secured thereto is a tubular guide **20** of suitable non-magnetic material. The tubular guide **20** includes a closed end **22**. In the embodiment shown, the tubular guide **20** is open at its other end and communicates with the valve unit **6** through a central opening **24** in the cap **18**. The guide **22** is fixedly mounted in a support member **26** of a housing which is generally designated by reference numeral **28**. The housing **28** further comprises spaced, opposed support members **30** and **32**, a base or the like **34**, a casing **36**, etc.

Reference numeral **38** designates a permanent ring magnet which is slidably mounted on the tubular guide **20**. A core or armature **40** is slidable in the guide **20** and operable by the magnet **38**. The core **40** is engaged with the diaphragm valve **16** for actuating same to closed position on the seat **14**. Mounted on the permanent magnet **38** is a generally cup-shaped case **42** which also is of non-magnetic material. A coil spring **44** is mounted under compression between the closed end **22** of the guide **20**

and the end wall of the case **42** for yieldingly urging the magnet **38** in a direction to move the core **40** away from the diaphragm valve **16**.

A tubular shaft **46** is journaled longitudinally in the housing **28** in bearings **48** and **50** which are provided therefor on the members **30** and **32**, respectively, of said housing. The shaft **46**, in the embodiment shown, is releasably connected to a drive shaft **52** from a suitable source of power through the medium of a conventional clutch **54**.

Mounted for longitudinal sliding movement in the tubular shaft **46** is a rod **56** which is engageable with the case **42** on the magnet **38**. The rod **56** emerges from the inner end of the tubular shaft **46** through a bearing **58** which is provided therefor in said shaft. A collar **60** is slidably mounted on the tubular shaft **46** and connected to the outer end portion of the rod **56** by a pin **62**. The pin **62** is operable in longitudinal slots **64** which are provided therefor in the tubular shaft **46**. Reference numeral **66** designates generally a centrifugal governor which is mounted on the tubular shaft **46** for advancing the rod **56**. Toward this end, the governor **66** comprises pairs of arcuate arms **68** which straddle the shaft **46** and have one end portion pivotally connected thereto as indicated at **70**. The pairs of arms **68** are generally U-shaped units comprising connecting or bight portions **72** (FIGURE 3) having secured thereon flyweights **74**. The arcuate arms **68** are adapted to cam on the collar **60** for actuating same in one direction on the shaft **46**.

The other end portion of the rod **56** is threaded, as indicated at **76**, and mounted for adjustment thereon is a removable nut **78**. A coil spring **80** is mounted under compression on the rod **56** between the nut **78** and the support member **30** for yieldingly urging said rod toward the case **42**.

It is thought that the operation of the device will be readily apparent from a consideration of the foregoing. Briefly, when the rotary shaft **46** is at rest, the governor **66** is in the inoperative position as shown in FIGURE 1 of the drawings and the diaphragm valve **16** is held in closed position by the rod **56**, actuated by the spring **80**, the case **42**, the permanent magnet **38** and the core **40**. When the shaft **46** is rotated and attains the necessary speed, the governor **66** opens to the position of FIGURE 2 of the drawing. Thus, the arms **68** cam on the collar **60** and retract the rod **56** against the action of the spring **80** for permitting the spring **44** to actuate the case **42** and the magnet **38**. In this manner, the core **40** is moved away from the diaphragm valve **16** permitting same to open.

The foregoing is considered as illustrative only of the principles of the invention. Further, since numerous modifications and changes will readily occur to those skilled in the art, it is not desired to limit the invention to the exact construction and operation shown and described, and accordingly all suitable modifications and equivalents may be resorted to, falling with the scope of the invention as claimed.

What is claimed as new is as follows:

1. A fluid flow control device comprising a valve unit including a fluid pressure-opened valve member, means comprising a permanent magnet for closing said valve member, and means responsive to the action of centrifugal force for actuating said magnet, said magnet including a slidable ring, the first-named means further comprising a slidable core operable by said ring and operatively engaged with the valve member, the second-named means comprising a tubular rotary shaft, a rod slidably mounted in the shaft, means operatively connecting said rod to the ring, a centrifugal governor mounted

on the shaft, and means operatively connecting said governor to the rod.

2. The combination of claim 1, the third-named means comprising a generally cup-shaped case mounted on the ring in the path of the rod for engagement and actuation in one direction thereby.

3. The combination of claim 2, together with a coil spring mounted in the case and engaged under compression therewith for yieldingly resisting actuation thereof by the rod.

4. The combination of claim 1, together with a closed end hollow guide connected to and communicated with the valve unit, said guide slidably receiving the ring thereon and slidably receiving the core therein.

5. A fluid flow control device comprising a valve unit including a fluid pressure-opened valve member, means comprising a permanent magnet for closing said valve member, and means responsive to the action of centrifugal force for actuating said magnet, said magnet including a slidable ring, the first-named means further comprising a slidable core operable by said ring and operatively engaged with the valve member, the second-named means comprising a tubular rotary shaft, a rod slidably mounted in the shaft, means operatively connecting said rod to the ring, a centrifugal governor mounted on the shaft, and means operatively connecting said governor to the rod, the last-named means including a collar slidable on the shaft and affixed to the rod, said governor comprising arcuate arms pivotally mounted on the shaft and cammingly engaged with said collar, and flyweights on the free end portions of said arms.

6. The combination of claim 5, said shaft being cylindrical and having diametrically opposite, longitudinal slots therein, and a pin operable in the slots and connecting the collar to the rod.

7. The combination of claim 5, together with spring means mounted on said rod for yieldingly resisting slidable movement thereof.

8. A fluid flow control device comprising a valve unit including a fluid pressure-opened valve member, means comprising a permanent magnet for closing said valve member, and means responsive to the action of centrifugal force for actuating said magnet, the second-named means

comprising a tubular rotary shaft, a rod slidably mounted in the shaft, means operatively connecting said rod to said magnet, a centrifugal governor mounted on the shaft, and means operatively connecting said governor to the rod.

9. A fluid flow control device comprising a valve unit including a valve member, means comprising a permanent magnet for closing said valve member, and means responsive to the action of centrifugal force for actuating said magnet, the second-named means comprising a tubular rotary shaft, a rod slidably mounted in the shaft, means operatively connecting said rod to the magnet, a centrifugal governor mounted on the shaft, and means operatively connecting the governor to the rod.

10. A fluid flow control device comprising a valve unit including a fluid pressure-opened valve member, means comprising a permanent magnet for closing said valve member, and means responsive to the action of centrifugal force for actuating said magnet, the second-named means comprising a tubular rotary shaft, a rod slidably mounted in the shaft, means operatively connecting said rod to the magnet, a centrifugal governor mounted on the shaft, and means operatively connecting said governor to the rod, the last-named means including a collar slidable on the shaft and affixed to the rod, said governor comprising arcuate arms pivotally mounted on the shaft and cammingly engaged with said collar, and flyweights on the free end portions of said arms.

References Cited by the Examiner

UNITED STATES PATENTS

1,078,336	11/1913	Douglas	137—53
1,502,594	7/1924	Spiva	137—57 X
2,088,185	7/1937	Borde	137—54 X
2,533,491	12/1950	McMahon	251—65
2,619,986	12/1952	Goepfrich	251—331 X
2,629,401	2/1953	Miller	251—65 X
2,752,936	7/1956	Cantalupo	251—65 X

WILLIAM F. O'DEA, *Primary Examiner.*

CLARENCE R. GORDON, *Examiner.*