June 23, 1953 M. RAY 2,642,605

FLOOR WAXER

Filed Nov. 21, 1949 2 Sheets-Sheet 1

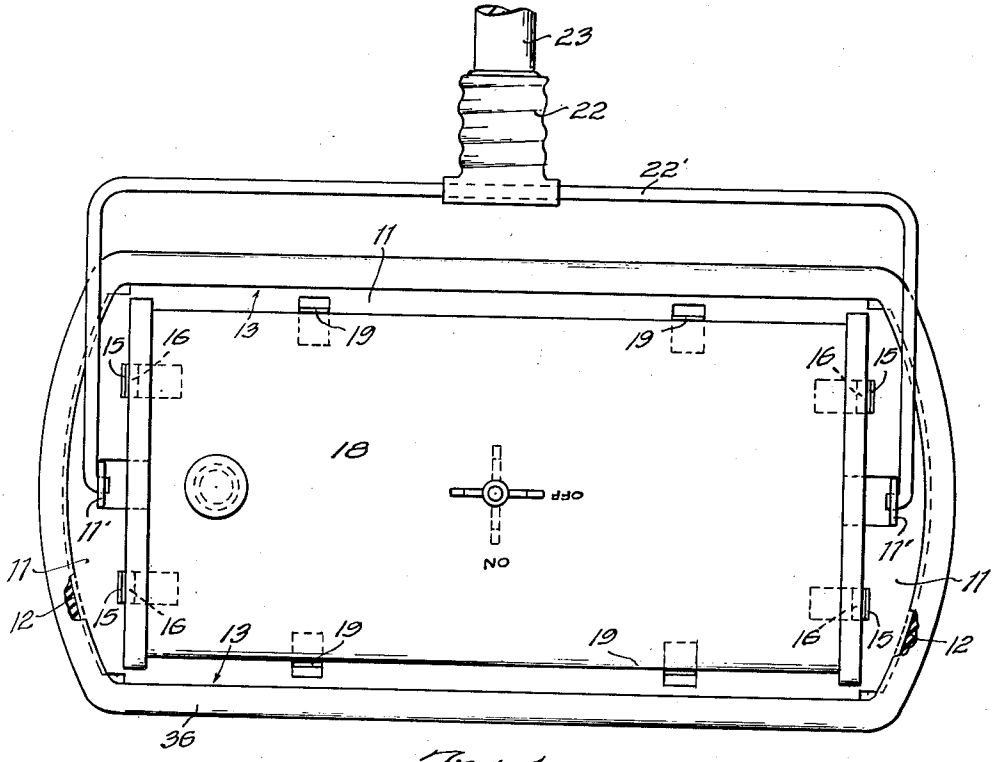


Fig. 1.

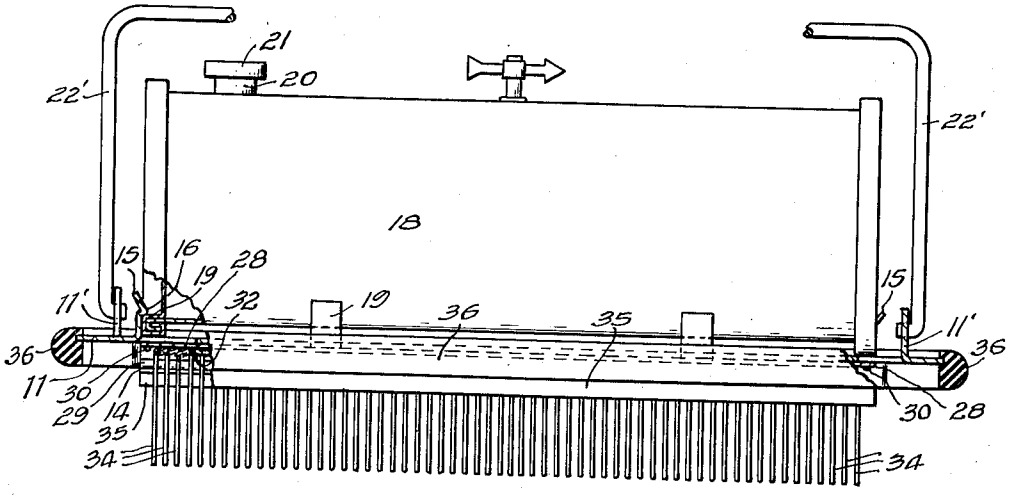


Fig. 2.

INVENTOR.
MAJOR RAY
By Fred L. Emerson,
ATTORNEY.

June 23, 1953 M. RAY 2,642,605

FLOOR WAXER

Filed Nov. 21, 1949 2 Sheets-Sheet 2

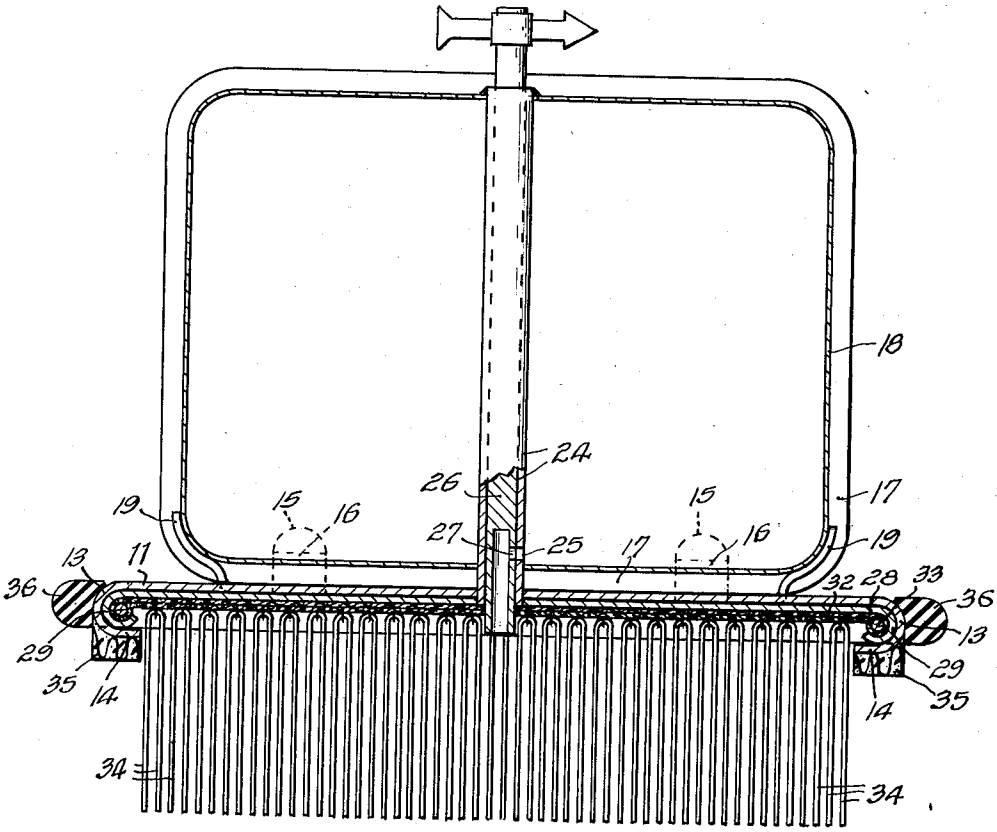


Fig. 3.

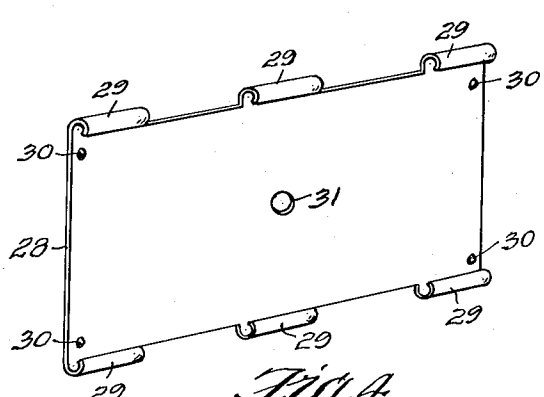


Fig. 4.

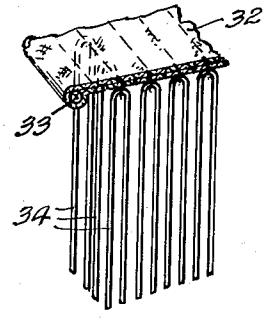


Fig. 5.

INVENTOR.
MAJOR RAY
BY Fred H. Jhanson
ATTORNEY.

Patented June 23, 1953

2,642,605

# UNITED STATES PATENT OFFICE

2,642,605

## FLOOR WAXER

Major Ray, Wellston, Mo.

Application November 21, 1949, Serial No. 128,647

2 Claims. (Cl. 15—131)

1

My invention relates to floor wavers for spreading self polishing liquid wax.

An object of the invention is to provide a floor waxer using self polishing liquid wax for the easy spreading on a floor by flexible absorbent cotton wax spreader cords.

A further object of the invention is to provide a floor waxer that may be quickly and conveniently disassembled for cleaning, or for replacing worn, or defective parts.

A further object is to provide a floor waxer having a slideway body provided with a detachable liquid wax container provided with a wax flow control valve.

A further object of the invention is to provide a floor waxer having a slideway body provided with a removable cotton cord supporting head.

A further object of the invention is to provide a floor waxer provided with an endless cushion member to prevent marring furniture when coming into contact therewith.

A further object of the invention is to provide a floor waxer with a detachable handle for operating the waxer.

A further object of the invention is to provide a floor waxer having a slideway body with opposed polishing elements useable when the cotton wax spreader cords supporting head is detached from the slideway body.

Other objects and advantages of the invention will be apparent during the course of the following description.

In the accompanying drawings, forming a part of this application, and in which like characters of reference denote similar parts throughout the several views:

Fig. 1 is a plan view of a floor waxer embodying the features of my invention.

Fig. 2 is a view of the floor waxer showing the same partly in sectional elevation and partly in front elevation.

Fig. 3 is a transverse sectional elevation of the floor waxer.

Fig. 4 is a bottom plan view of the plate for supporting the wax spreading means.

Fig. 5 is a fragmentary view of the flexible absorbent wax spreader.

In the drawings, wherein for the purpose of illustration only, is shown a preferred embodiment of the invention, the numeral 11 designates, generally, a waxer body member which is preferably in the form of a plate having curved, or convexed end edges 12. The front and rear edge portions of the plate 11 terminate in downwardly projecting flanges 13, each of which terminates

2

at its lower edge in an inwardly projecting horizontally disposed flange 14 to provide a channeled slideway and guide to removably receive a wax spreader cord supporting head hereinafter described.

The plate 11 is provided adjacent each end edge with flexibly resilient upstanding pressure ears 15 having beaded portions 16 for snapping over end flanges 17 at the head ends of a liquid wax container 18 adapted to be removably seated on the body member, or plate 11. An ear, or stop 19 may be carried by the plate 11 to frictionally embrace the front and back walls of the container 18 to assist the ears 15 in preventing displacement of the container 18 upon the plate 11, yet rendering the container readily removable from the body member 11 for cleaning, or replacement.

The liquid wax container 18 may be provided with a suitable filling neck 20 on the top thereof and may be closed by a suitable closure cap 21. The plate 11 may also be provided with opposed upstanding ears 11' to which the ends of a bail member 22' are hingedly connected. A suitable socket 22 adapted to receive a detachable operating handle 23 is secured to the bail member 22'. While I have shown the socket as attached to the bail member 22', it may be attached to the body member 11, if so desired.

The container is provided with a liquid wax control valve consisting of a tubular valve body 24 having a wall opening 25. The valve body runs vertically through the container 18 and the body is open at its lower end. The valve body preferably projects beyond the outer wall of the container instead of stopping flush therewith. A tubular valve stem 26 having a wall opening 27 has a telescopic and rotary slip fit within the valve body. When the valve is open, the wall openings are in register, and, when the valve is closed, the wall openings are out of register. When the valve is open, the liquid wax flows from the lower open end of the valve stem 26.

The floor waxer also embodies a liquid wax spreader which consists of a plate like head portion 28 having spaced downturned curved fingers 29 at the front and back edges thereof which are more, or less flexibly resilient and are provided with protuberances 30 on their inner faces adjacent the free ends thereof. The plate 28 is adapted to be detachably, frictionally and slidably supported by the fingers 29 in the flanges 13 on the plate 11. The spreader head member, or plate 28 is insertable and removable from

the slideway from either end thereof, and, it is held against accidental longitudinal displacement by the valve body 24 passing through an opening 31 in the plate 28.

Associated with the head, or plate 28, is a flexible wax spreader having a fabric body 32 with its front and back edges reinforced by suitable means 33. The reinforced edges of the fabric body 32 are removably held by the spaced plate fingers 29 to hold the fabric body 32 in position with relation to the plate 28, or, in other words, to hold the fabric body between the reinforcing means in a stretched position between the fingers 29. Soft absorbent cotton cords 34 are suitably attached, as by stitching, to the lower face fabric body 32. The cords may be of suitable length to effectively spread liquid wax discharged from the container 18, as the waxer is moved back and forth over a floor by the handle 23. The plate 28 may be easily removed from the body plate 11 from either end thereof after the liquid wax container has been removed.

The lower faces of the horizontally disposed inwardly projecting flanges 14 on the plate 11 may be provided with polishing elements 35, such, for instance, as felt strips, lambswool, or the like, which may be brought into use for polishing purposes when the liquid wax spreader head having the cotton cords 34 is removed from the plate 28.

The skirt flanges 14 may have suitably attached thereto an endless rubber cushion member 36 surrounding the body member 11 to prevent marring furniture should the waxer come into contact therewith.

The many advantages of the hereindescribed invention will readily suggest themselves to those skilled in the art to which it appertains.

It is to be understood that the form of my invention, herein shown and described, is to be taken as a preferred example of the same, and that various changes in the shape, size and arrangement of the several parts may be resorted to, without departing from the spirit of my invention, or the scope of the appended claims.

What I claim is:

1. In a floor waxer having a liquid wax container having flanges at the ends thereof and a supporting plate therefor, said plate having a central opening and the front and back edge portions thereof curved downwardly and inwardly to provide spaced guideways open at the ends thereof, a supporting head having a central opening and spaced fingers along opposed edges thereof slidably mountable in the guideways, a liquid wax spreader having a fabric body provided with cylindrical edges embraced by the spaced fingers to hold the fabric body in a stretched position between the spaced fingers, wax spreading cords secured to the fabric body, ears carried by the plate upon which the front and back walls of the container rest, flexibly resilient ears on the plate for snap-on engagement with the end flanges of the container, and a valve for controlling the discharge of liquid wax from the container to the spreader cords and the lower end of the valve projecting below the lower wall of the container and serving as a pilot to enter the central plate and supporting head openings.



2. In a device of the character described having, in combination, a plate having a central opening and having convexed end edges and having opposed guideways at the front and back sides thereof, a wax spreader supporting head having a central opening and having spaced fingers on opposed edges thereof removably mounted in the opposed guideways and the supporting head slidably embracing the lower face of the plate, a liquid wax spreader having a fabric body provided with wax spreading cords and having opposed reinforced edges engageable with the spaced fingers on the supporting head to hold the fabric body in a stretched position between the spaced fingers, a liquid wax container having flanges at the head ends thereof, stop members carried by the plate to embrace and support the container, flexibly resilient ears having beaded portions upstanding on the plate for snapping over the container flanges for removably seating the container on the stop members, a tubular valve body secured to and passing through the container and having an outlet opening to the interior of the container and receivable at its lower end in the central openings in the plate and the supporting head, and a valve stem having a discharge opening adapted to be moved to register with the valve body opening for feeding liquid wax to the wax spreading cords.

MAJOR RAY.

**References Cited** in the file of this patent

UNITED STATES PATENTS

| Number | Name | Date |
|---|---|---|
| 308,338 | Barrett | Nov. 25, 1884 |
| 593,302 | Leavitt | Nov. 9, 1897 |
| 668,874 | Donnelly et al. | Feb. 26, 1901 |
| 1,186,088 | Finlay | June 6, 1916 |
| 1,560,841 | Nearn | Nov. 10, 1925 |
| 2,165,508 | Rieber | July 11, 1939 |
| 2,477,777 | Williams | Aug. 2, 1949 |
| 2,502,900 | Steiert | Apr. 4, 1950 |