Sept. 18, 1934. S. G. CANTACUZENE 1,974,236

SAMPLING APPARATUS FOR LIQUIDS

Filed March 3, 1932 2 Sheets-Sheet 1

Fig. 1.

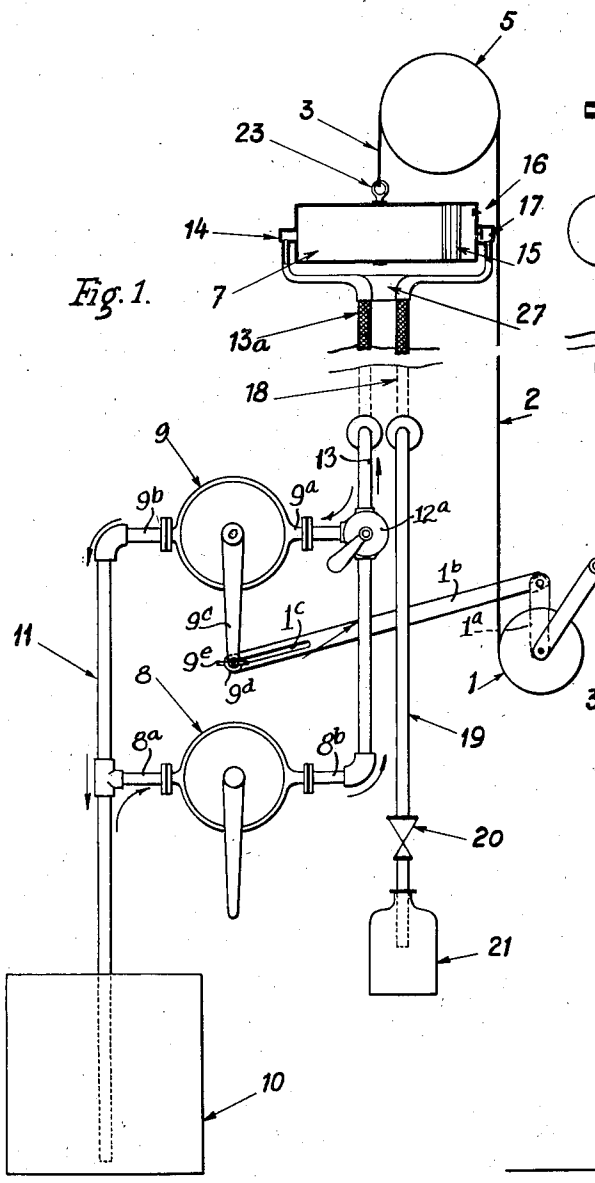

Fig. 2.

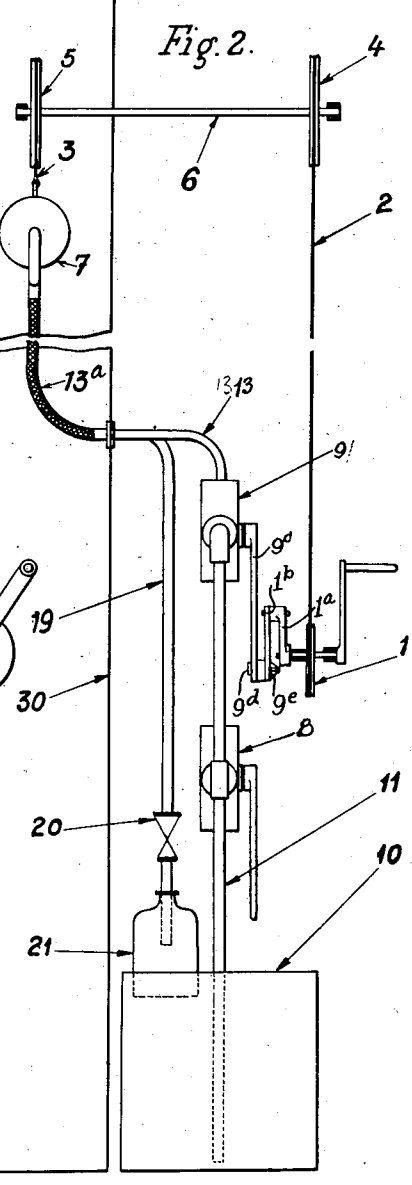

S. G. Cantacuzene
INVENTOR

By: Marks & Clark
ATTYS.

Sept. 18, 1934. S. G. CANTACUZENE 1,974,236

SAMPLING APPARATUS FOR LIQUIDS

Filed March 3, 1932 2 Sheets-Sheet 2

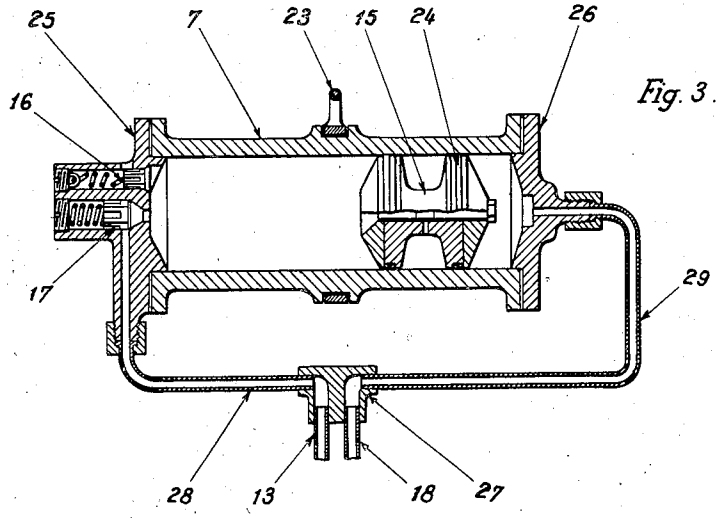

Fig. 3.

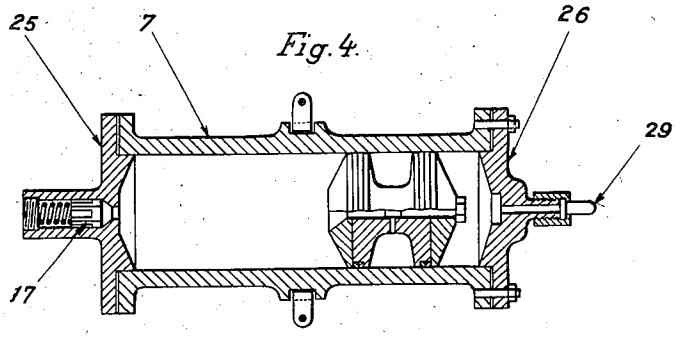

Fig. 4.

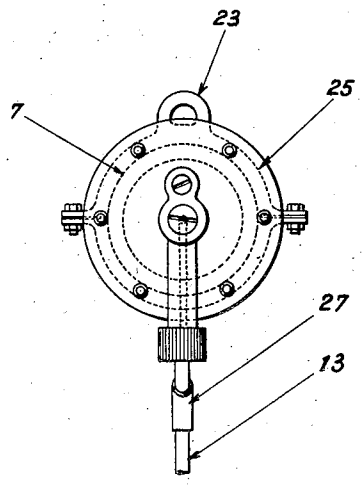

Fig. 5.

S. G. Cantacuzene
INVENTOR

By: Marks & Clark
Attys.

Patented Sept. 18, 1934 1,974,236

UNITED STATES PATENT OFFICE

1,974,236

SAMPLING APPARATUS FOR LIQUIDS

Servan Georges Cantacuzene, Paris, France

Application March 3, 1932, Serial No. 596,587
In Rumania March 26, 1931

5 Claims. (Cl. 137—18)

It is known that some liquids, such as raw petroleum, are not homogeneous and separate, in storing tanks, in layers, the physical and chemical nature of which vary from one to the other.

The present invention has for object a sampling apparatus allowing to take exact average samples of the contents of the tank, either along the entire height of the liquid, or on portions of its height, or finally to effect local tappings at any desired level.

For that purpose, the apparatus according to the invention comprises a pump which can be moved in the tank, for instance by means of a winch arranged outside the tank and the piston of which is hydraulically moved in the cylinder by means of an externally arranged pump, so that it is possible to obtain a constant ratio between the vertical movement of the cylinder in the tank and that of the piston in this cylinder.

A form of carrying out the subject-matter of the invention will be described, by way of example, with reference to the accompanying drawings, in which:

Fig. 1 is a diagrammatic elevation of the plant.

Fig. 2 is a side view.

Fig. 3 is a vertical section of the pump.

Figs. 4 and 5 are a horizontal section and an end view of this pump.

Outside the tank, at a man's height, is arranged a winch 1, which, through the medium of steel cables or ribbons 2 and 3, provided at the exterior and interior of the tank and passing on pulleys 4 and 5, respectively, both rigid with a shaft 6, actuates, in the tank, upon ascent and descent, a pump barrel 7; adjacent to the winch 1 are arranged two pumps 8 and 9 and a vessel 10; a tube 11 puts the suction pipe 8*a* of the pump 8 in communication with the delivery pipe 9*b* of the pump 9 and with the vessel 10; a tube 12 puts the suction pipe 9*a* of the pump 9 in communication with the delivery pipe 8*b* of the pump 8 and with a tube 13 through the medium of a distributor 12*a*. This tube 13 terminates in a flexible tube 13*a*, arranged within the tank, and which is connected to an orifice 14 provided at one of the ends of the pump barrel 7. The pump barrel 7 encloses a piston 15.

This device constitutes a hydraulic transmission in the following manner: the vessel 10, pumps 8 and 9, tubes 11, 12, 13 and 13*a* and pump barrel 7 up to the piston 15 are filled with a suitable liquid, for instance water containing glycerine (in order to lower the freezing temperature); if the pump 8 is actuated and if the distributor 12*a* is suitably located, the liquid will be delivered into the pump barrel 7 by the pump 8, tubes 12, 13 and 13*a* and orifice 14; if the pump 9 is actuated and if the distributor 12*a* is suitably located, the liquid in the pump barrel 7 is delivered towards the vessel 10 through the orifice 14, tubes 13*a*, 13 and 12, pump 9 and tube 11.

The operating lever 9*c* of the pump 9 carries, at its free end, a bolt 9*d*, screw-threaded at its end and on which a wing nut 9*e* is screwed. The bolt 9*b* extends in a slide 1*c* of a connecting rod 1*b* pivotally connected at the other end to a crank 1*a* rigid with the shaft of the pulley 1. When the nut 9*e* is tightened, the operating lever 9*c* of the pump 9 is actuated by the rotation of the crank 1*a* and of the pulley 1. The actuation ceases when the nut 9*e* is loosened, as, in this case, the slide 1*c* of the connecting rod 1*b* can freely slide on the bolt 9*d*.

At the end opposite to the orifice 14, the pump barrel 7 is provided with two valves, one an inlet valve 16 directly communicating with the interior of the tank, the other an exhaust valve 17 causing the pump barrel 7 to communicate, through a flexible tube 18 arranged within the tank and a rigid tube 19 placed outside the tank and closed at the bottom by a cock 20, with a vessel 21, adapted to receive the sample taken from the tank. 23 is a suspension ring for the pump barrel 7, provided with a member for connecting it with the steel cable or ribbon 3; 24 designates the fluid-tight packings of the piston 15; 25 and 26 are the ends of the pump barrel 7; in order to ensure the proper balance of the device during the movement in the tank, the pump barrel can rotate in the suspension ring 23 and the flexible tubes 13 and 18 are rendered rigid together at their upper end by a securing member 27 and communicate with the pump barrel 7 through the medium of the rigid tubes 28 and 29; 30 designates the vertical wall of the tank.

The operation of the apparatus is as follows:

If it is desired to obtain an average sample of the entire contents of the tank, the pump barrel 7 being in its lower position, that is to say at the bottom of the tank, and the piston 15 being at the end of its stroke adjacent to the valves 16 and 17, one operates the winch 1 after having tightened the wing nut 9*e* and suitably placed the distributor 12*a*. One raises the pump, and at the same time the hydraulic transmission is actuated by means of the pump 9: as the pump barrel 7 rises in the tank, the piston 15 moves away from the inlet valve 16 and the liquid of the tank enters the pump barrel 7 proportionally to the rising movement of the latter, that is to

say for equal rising movements correspond equal quantities of liquid introduced. When it has reached the upper end of its stroke, the pump barrel will contain an exact average sample. Being stopped at this place, the pump barrel 7 remains stationary. The distributor 12*a* is adjusted so as to connect the orifice 14 to the pump 8 and this pump is actuated, thereby determining the reverse movement of the piston 15 in the pump barrel 7 and, consequently, the discharge of the average sample towards the tube 19 and vessel 21.

If an average sample of a zone comprised between two levels is desired, one raises the pump barrel 7 by means of the winch 1 up to the lower level after having loosened the nut 9*e*, the reading being made on the graduated ribbon 2, then, one actuates the winch 1 and pump 9 up to the upper level after having retightened the nut 9*e*. The extraction of the sample takes place as above.

If a local sample is desired, the pump barrel 7 is raised, by means of the winch 1, to the desired level, it is stopped, the nut 9*e* is loosened and the pump 9 only is actuated. The extraction of the sample takes place as above.

During the interval between the samplings, which preferably are effected from the bottom to the top, the pump barrel 7 remains in its highest position for allowing the remaining portions of liquid which may adhere along the tubes 18 and 19 to completely flow away.

I claim:

1. An apparatus for taking exact average samples of a liquid contained in a tank, comprising a sucking and forcing pump hung within the tank and the suction orifice of which opens within the tank, means for actuating said pump arranged outside the tank, a delivery pipe on this pump, opening outside the tank, and means for causing said pump to move up and down arranged outside the tank.

2. An apparatus for taking exact average samples of a liquid contained in a tank, comprising a sucking and forcing pump provided with a free piston and hung within the tank and the suction orifice of which opens within the tank, means for causing said pump to move up and down placed outside the tank, hydraulic driving means for actuating said pump arranged outside the tank, a flexible piping for connecting these driving means to one of the sides of the sucking and forcing pump hung within the tank, and a flexible delivery piping extending from the other side of the sucking and forcing pump and opening outside the tank.

3. An apparatus for taking exact average samples of a liquid contained in a tank, comprising a sucking and forcing pump provided with a free piston and hung within the tank and the suction orifice of which opens within the tank, means for causing said pump to move up and down arranged outside the tank, a suction device and a delivery device outside said tank, a flexible piping for connecting these suction and delivery devices to one of the sides of the pump hung within the tank, a distributor on this piping and arranged for connecting said pump sometimes to the suction device, sometimes to the delivery device placed outside the tank, and a flexible delivery piping, extending from the other side of said pump hung within the tank and opening outside the latter.

4. In an apparatus for taking exact average samples of a liquid contained in a tank, the combination of pump barrel hung within this tank, means for causing this pump barrel to move up and down within the tank, a free piston within this pump barrel, a suction valve at one of the ends of said pump barrel, a delivery valve at the same end of said pump barrel, a flexible delivery piping extending from said delivery valve and opening outside said tank, a flexible control piping extending from the end of said pump barrel opposed to said suction and delivery valves and opening outside said tank, means for sucking and delivering a fluid in said pump barrel, arranged outside said tank and connected to said flexible control piping, a connecting device between the means for causing said pump barrel to move up and down and said suction and delivery means, and adapted to actuate the piston of said pump barrel during its upward movement in the liquid of said tank.

5. In an apparatus for taking exact average samples of a liquid contained in a tank, the combination of a pump barrel hung within this tank, means for causing this pump barrel to move up and down within the tank, a free piston within this pump barrel, a suction valve at one of the ends of said pump barrel and opening within said tank, a delivery valve at the same end of said pump barrel, a flexible delivery piping extending from said delivery valve and opening outside said tank, a flexible control piping extending from the end of said pump barrel opposed to said suction and delivery valves and opening outside said tank, means for sucking and delivering a fluid in said pump barrel, arranged outside said tank and connected to said flexible control piping, and a distributor on said flexible control piping, this distributor being adapted to connect to said pump barrel sometimes the suction side, sometimes the delivery side of said means for sucking and delivering a fluid in said pump barrel.

SERVAN GEORGES CANTACUZENE.