C. ROBEY.

CENTRIFUGALLY CONTROLLED CLUTCH.

APPLICATION FILED MAR. 15, 1913.

1,106,242.

Patented Aug. 4, 1914.

2 SHEETS—SHEET 1.

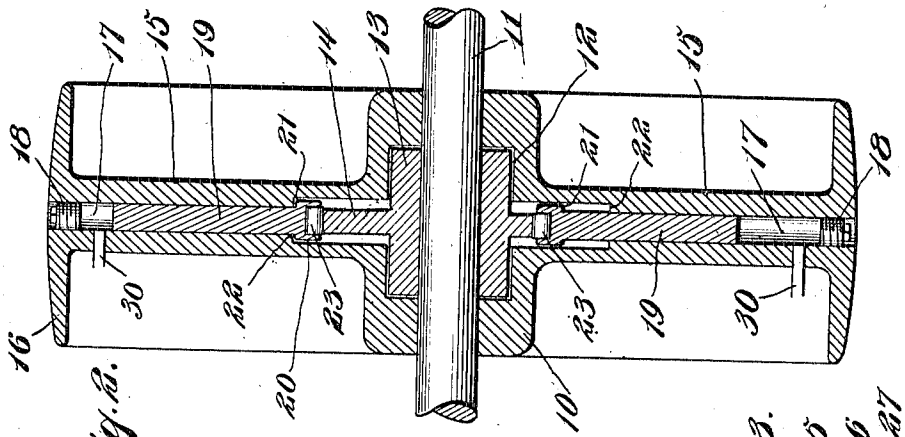

Fig. 2.

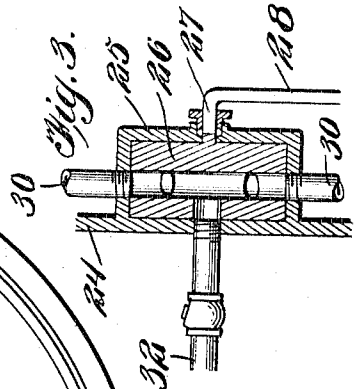

Fig. 3.

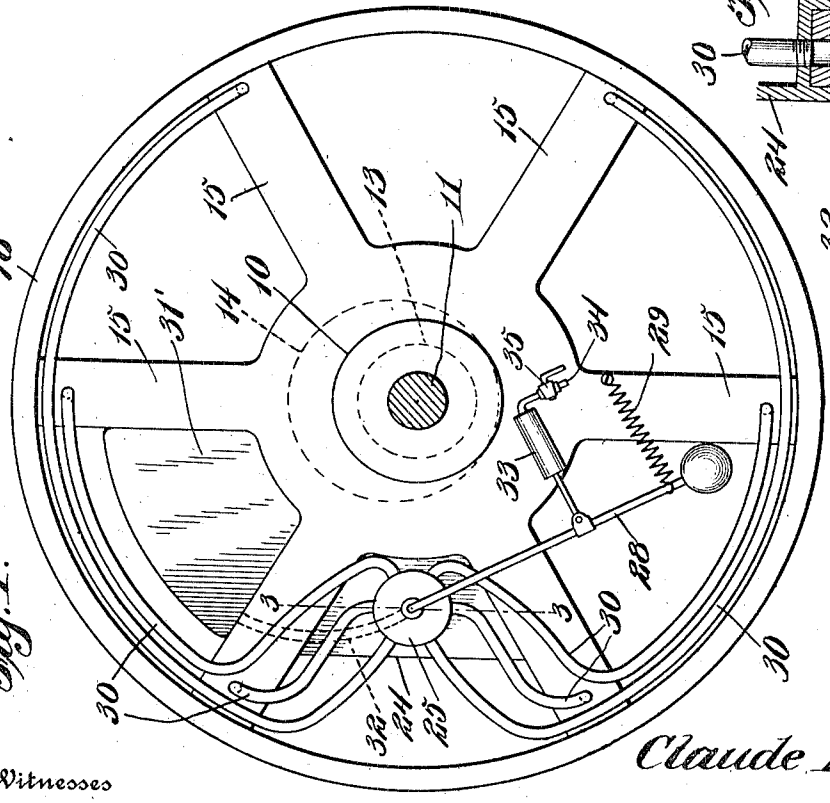

Fig. 1.

Witnesses

Louis R. Heinrichs

F. O. Anders.

Inventor

Claude Robey

By Victor J. Evans

Attorney

C. ROBEY.

CENTRIFUGALLY CONTROLLED CLUTCH.

APPLICATION FILED MAR. 15, 1913.

1,106,242. Patented Aug. 4, 1914.

2 SHEETS—SHEET 2.

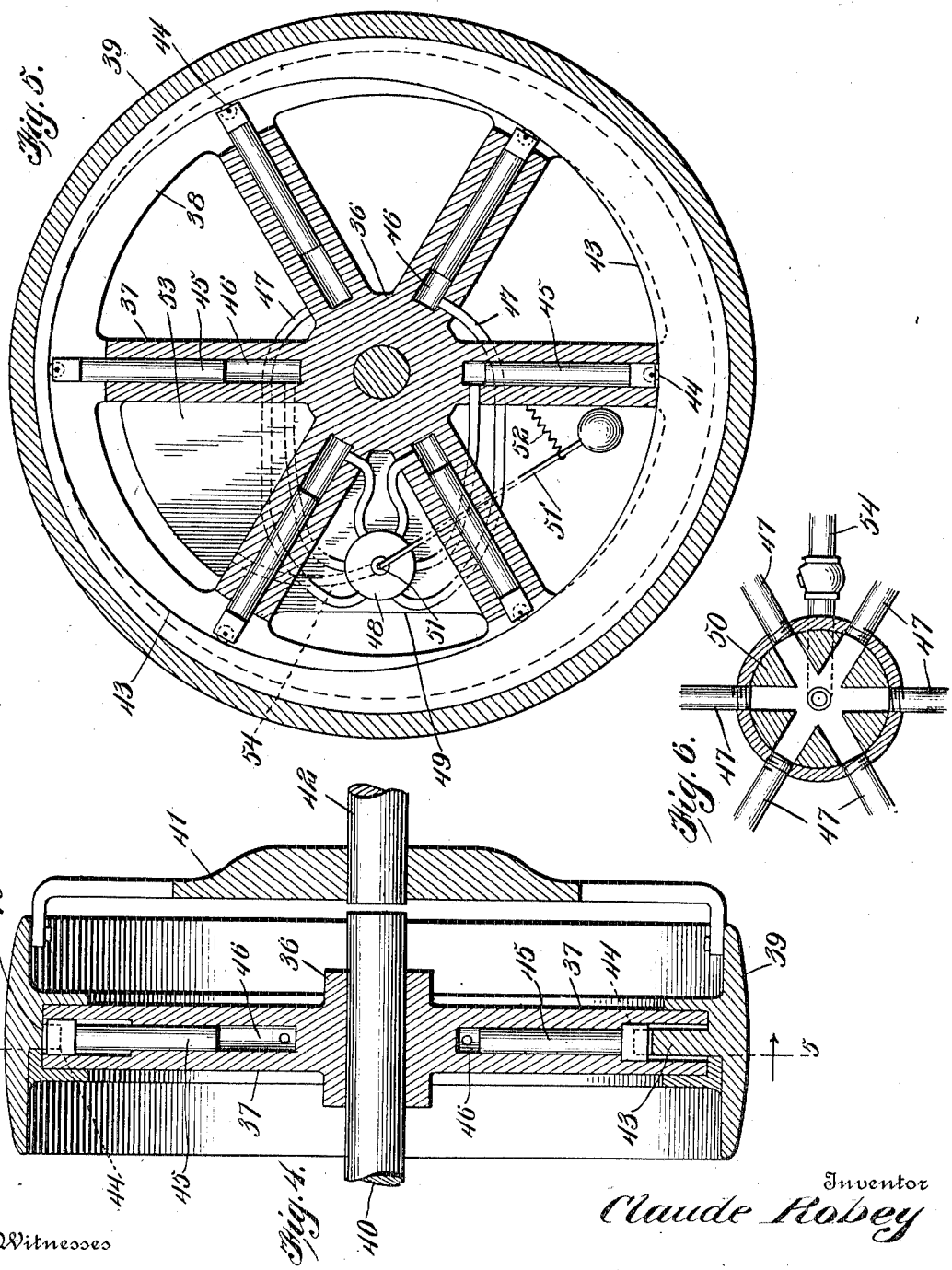

Witnesses

Louis R. Heinrichs

L. O. Parker.

Inventor

Claude Robey

By Victor J. Evans

Attorney

UNITED STATES PATENT OFFICE.

CLAUDE ROBEY, OF CANON CITY, COLORADO.

CENTRIFUGALLY-CONTROLLED CLUTCH.

1,106,242. Specification of Letters Patent. Patented Aug. 4, 1914.

Application filed March 15, 1913. Serial No. 754,422.

To all whom it may concern:

Be it known that I, CLAUDE ROBEY, a citizen of the United States, residing at Canon City, in the county of Fremont and State of Colorado, have invented new and useful Improvements in Centrifugally - Controlled Clutches, of which the following is a specification.

The invention relates to a centrifugally controlled clutch, and more particularly to the class of variable speed controlling devices.

The primary object of the invention is the provision of a device of this character wherein a pulley or shaft will be sustained at a constant speed of rotation irrespective of the changes in the speed of the driving power operating either of the same.

Another object of the invention is the provision of a device wherein a pulley or shaft will be brought from a state of rest to full speed or vice versa without sudden jerking and at any desired rate of acceleration.

A further object of the invention is the provision of a device of this character wherein the driving or driven element will be positively controlled irrespective of the variation in the speed of momentum of either element, thereby sustaining a uniform rate of momentum under all conditions.

A still further object of the invention is the provision of a device of this character which is simple in construction, adaptable for various uses, reliable and efficient in operation, and inexpensive in manufacture.

With these and other objects in view, the invention consists in the construction, combination and arrangement of parts as will be hereinafter fully described, illustrated in the accompanying drawing, and pointed out in the claim hereunto appended.

In the drawings:—Figure 1 is a side elevation of a pulley, the same being mounted upon a driving shaft with the device constructed in accordance with the invention applied thereto. Fig. 2 is a vertical sectional view through the pulley. Fig. 3 is a sectional view on the line 3—3 of Fig. 1. Fig. 4 is a view similar to Fig. 2, showing a slight modification of the invention. Fig. 5 is a vertical sectional view through the same on the line 5—5 of Fig. 4. Fig. 6 is a fragmentary vertical transverse sectional view through the valve.

Similar reference characters indicate corresponding parts throughout the several views in the drawings.

Referring to the drawings by numerals, particularly Figs. 1 to 3 inclusive, the device comprises a pulley formed with a hub 10 which loosely surrounds a driving shaft 11, the same being passed centrally through the hub, the latter being formed with an annular recess 12 concentric to the shaft for receiving a sleeve 13 which is keyed or splined to the said shaft 11 and is provided with a cam 14 which controls the clutch mechanism in a manner presently described. The hub 10 of the wheel is integrally formed with outwardly extending radially disposed spokes 15 supporting a belt rim 16 which is integral with the said spokes and over which is adapted to be trained a belt in the ordinary well-known manner. The spokes 15 are formed with central bores 17 which open at their outer ends through the rim and in these open outer ends are detachably threaded closure caps or taps 18, the inner ends of the bores 17 being in communication with the recess 12 in the hub 10, and reciprocatingly mounted within the bores are pistons 19, the same being formed with enlarged inner ends 20 providing shoulders 21 which coöperate with shoulders 22 formed in the bores 17 to limit the outward displacement of the pistons 19 when actuated. The larger ends 20 of the pistons 19 have journaled therein bearing rollers 23 which are adapted to contact and travel upon the outer periphery of the cam 14 when the wheel is being driven, the pistons 19 being operated in a manner presently described. Formed in one of the spaces between an adjacent pair of spokes 15 of the pulley wheel is a supporting web 24 provided with a valve casing 25 in which is mounted a six-way valve plug 26 having a stem 27 projecting exteriorly from the casing 25 centrally thereof, and on this stem is carried a weighted lever 28, the same being acted upon by means of a retractile spring 29 which has one end fixed thereto and its other end to the pulley wheel, the spring being designed to normally hold the valve plug 26 in closed position until the pulley when rotating acquires a predetermined speed of rotation, when the centrifugal force will be exerted upon the lever against the resistance of the spring 29, causing the said lever to be thrown outwardly and thereby gradually opening the valve

which is adapted to control the flow of fluid to and from the bores 17 in the spokes 15 of the wheel for actuating the pistons 19 working within the said bores, the fluid being fed to the bores 17 of the spokes 15 of the wheel in a manner presently described. Leading from the valve casing 25 are fluid supply pipes 30, each being connected with an individual spoke 15 near the outer end thereof or at a point beyond the limit of the outward movement of the piston 19 in the bore 17 therein, the bores 17 in the spokes 25 being filled with oil or other fluid through the outer ends of the said bores on removing the caps or taps 18. After the bores 17 in the spokes of the wheel have been filled the caps or taps are inserted for closing the same, the flow of fluid in the bores being controlled from and to the various spokes on the opening of the valve 26 which is controlled by centrifugal force during the rotation of the pulley. Mounted upon the pulley wheel is a reservoir 31 for containing compressed oil or other fluid, the same being provided with a lead pipe 32 communicating with the valve casing 25, the communication thereof being controlled by one of the passages in the valve 26 so that on the opening of the valve the fluid will be admitted to the respective pipes 30 for maintaining the correct amount of fluid pressure to automatically fill the bores 17 in the spokes of the pulley wheel whenever the valve is opened.

In the operation of the device, presuming that the bores 17 in the spokes 15 of the pulley wheel have been supplied with fluid and the driving shaft 11 is now rotated at any desirable speed, the periphery of the pulley will only travel at the rate of speed to which it is adjusted. Should the pulley wheel be at rest and no centrifugal force is exerted to throw open the valve 26, the spring 29 will keep this valve closed, and in this manner the pistons 19 are prevented from working so that the said pistons cannot climb the cam 14, consequently the pulley wheel must travel in unison with the shaft 11. As the pulley wheel momentum increases the centrifugal force exerted on the lever 28 acts against the spring 29 with increasing force until it overcomes the power or tension of the spring and starts to open the valve 26, and in doing this the oil or other fluid is released so that it begins to flow and allow the pulley wheel to slip and in this manner the speed of rotation thereof is reduced. When a predetermined momentum is reached the valve is kept open just far enough to keep the speed of the pulley wheel constant. It is of course to be understood that the cam 14 can be of any size according to the work for which the pulley wheel is designed.

The lever 28 is equipped with a dash pot 33 which is carried by the pulley wheel and lever, the said pot being provided with an exhaust nozzle 34 carrying an adjustable valve 35 which may be regulated to allow of slow or instantaneous clutching of the pulley wheel with the shaft 11 without sudden or undue jumping action. The pipe 32 leading from the reservoir 31′ is provided with a suitable check valve to prevent the back flow of fluid into the reservoir 31′ after being admitted through the valve 26 to the pipes 30 and the bores 17 in the spokes of the pulley wheel.

In Figs. 4 to 6 of the drawings there is shown a modified form of clutch device wherein the pulley wheel comprises a hub 36 having integrally formed therewith radially disposed spokes 37 carrying a fixed rim 38 on which is mounted a loose pulley rim 39, the hub 36 being keyed or otherwise fixed to the shaft 40, while the loose rim 39 is secured to a spider 41, the same being fixed to a driving shaft 42, the momentum from the latter being transmitted to the shaft 40 in a manner presently described. The inner side of the loose rim 39 is formed with a cam 43 against which contact and work the bearing rollers 44 journaled in the outer ends of reciprocating pistons 45 which are slidably fitted in bores 46 formed in the spokes 37 and communicating with these bores 46 at their inner ends are fluid supply pipes 47 which lead from a valve casing 48 mounted upon a supporting web 49 formed with an adjacent pair of spokes 37, the valve casing 48 being provided with a six-way turning valve plug 50 having a stem 51 projected exteriorly of the valve casing 48 and to which is connected a weighted lever 51 which controls the movement of the valve for regulating the flow of fluid in the pipes 47 to and from the bores 46 in the spokes 37 of the wheel. Connected to the lever 51 and to one of the spokes 37 is a coiled retractile spring 52 which normally acts upon the lever to hold the valve 50 closed, but the tension of this spring is overcome by centrifugal force during the increased momentum of the pulley wheel. Carried by the pulley wheel is a fluid reservoir 53 from which leads a supply pipe 54 provided with a check valve and communicates with the valve casing 48 so that when the valve is opened fluid will be admitted to the pipes 47 and the bores 46 in the spokes of the pulley wheel, so that the pistons 45 therein will be forced against the cam 43 so as to clutch the loose rim 39 with the pulley wheel and thereby drive the shaft 40 with the shaft 42. Should a variance of speed occur between the two shafts the fluid controlling the pistons will be regulated by the displacement of the lever 51 which regulates the valve 50 so that the displaceable

rim will slip on the inner rim 38 of the pulley wheel until the latter rotates at a speed constant or uniform therewith.

It will be apparent that in both forms of structure the device will control the speed of rotation of either the driving or driven element so as to assure a constant and uniform speed of rotation with respect to each other.

From the foregoing, it is thought that the construction and manner of operation of the device will be clearly understood, and therefore a more extended explanation has been omitted.

What is claimed is:—

A clutch mechanism comprising a driving element, a driven element, hollow spokes formed on one of said elements, pistons working within said spokes, a cam mounted on the other element and actuating the said pistons, a valve casing carried by one of the elements and having pipes communicating with the spokes and adapted to supply fluid thereto for sustaining the pistons engaged with the cam, an automatic valve working within the casing for changing the course of the fluid, an arm on said valve and having a weighted end for centrifugal action to move the said valves, a dash pot supported by one of the elements, a piston connected with the arm and working within the dash pot, and a spring connected to the arm and to one of the elements.

In testimony whereof I affix my signature in presence of two witnesses.

CLAUDE ROBEY.

Witnesses:
CYRUS WEABER,
C. L. CUDEBEC.