Dec. 13, 1938. J. GOGAN 2,139,817

HYDRAULIC RESISTANCE DEVICE

Original Filed Nov. 7, 1934

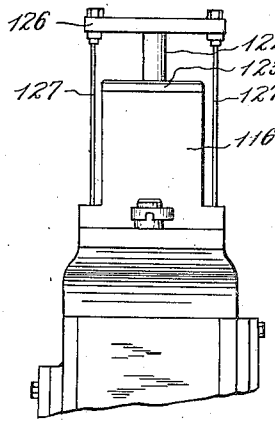

FIG. 1

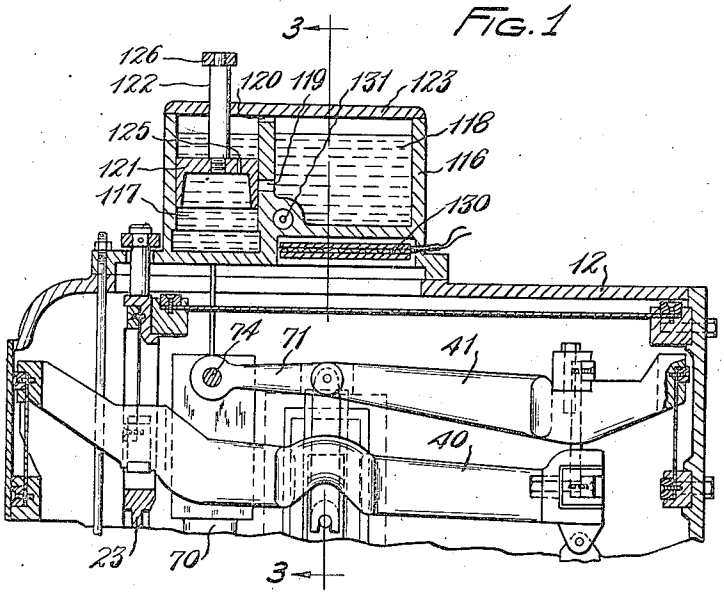

FIG. 2

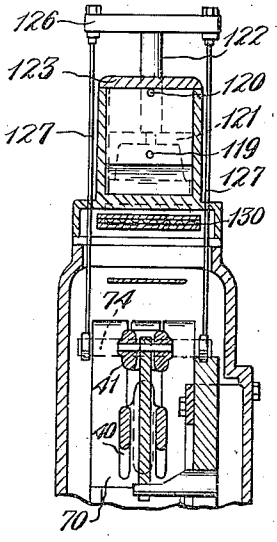

FIG. 3

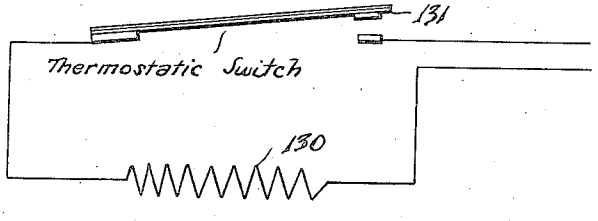

FIG. 4

INVENTOR.
JOSEPH GOGAN

BY

Kuris Hudson & Kent
ATTORNEYS

Patented Dec. 13, 1938 2,139,817

UNITED STATES PATENT OFFICE

2,139,817

HYDRAULIC RESISTANCE DEVICE

Joseph Gogan, Lakewood, Ohio

Original application November 7, 1934, Serial No. 751,867. Divided and this application February 4, 1937, Serial No. 124,045

1 Claim. (Cl. 188—96)

This invention relates to a hydraulic check or resistance device and as its principal object aims to provide an improved device of this kind in which the resistance fluid is maintained at a substantially constant temperature for eliminating undersirable viscosity effects.

Another object of my invention is to provide an improved hydraulic check or resistance device having a cylinder containing a fluid which resists movement of a piston, and in which heating means operates to automatically maintain the fluid at a substantially constant temperature.

A further object of my invention is to provide a hydraulic check or like device embodying a housing having therein a cylinder and reservoir containing resistance fluid and in which an electric heater, controlled by an automatically operating thermally responsive switch, maintains the temperature of the fluid at a substantially uniform value, such heater and switch being located in the reservoir housing.

The invention may be further briefly summerized as consisting of certain novel combinations and arrangements of parts hereinafter described and particularly set out in the appended claims.

This application is a division of my original application Serial No. 751,867, filed November 7, 1934.

In the accompanying sheet of drawings

Fig. 1 is an end view of a hydraulic check device embodying my invention;

Fig. 2 is a vertical sectional view taken through the device and showing the same mounted on the frame of a testing machine;

Fig. 3 is a transverse sectional view taken on line 3—3 of Fig. 2, and

Fig. 4 is a wiring diagram further illustrating the automatically controlled heating means for the resistance fluid.

More detailed reference will now be made to the accompanying drawing in which I show my improved hydraulic resistance device applied to a testing machine. Although my resistance device is especially suitable for use with testing machines, such as a hardness testing machine having a penetrator adapted to be pressed into a specimen by the lowering of a gravity weight, it should be understood that the device is also well suited to various other kinds of service. For example, it may be used as a dash-pot in weighing scales, as a resisting or retarding means for any movable member, or as a hydraulic shock absorber. In short, my improved hydraulic resistance device may be employed wherever a device of this kind is needed and where it is desirable to eliminate variation in the resistance action as the result of viscosity changes.

A testing machine, with which my hydraulic check may be used, is shown in the drawing as having a hollow frame 12 on top of which the check device may be mounted. A gravity weight 70 is vertically movable in the frame to provide the test load and is suspended upon one end of a fulcrumed lever 71 by means of a pivot pin 74. This lever is one of a pair of compound levers 40 and 41 through which the test load is transmitted to a vertically movable spindle 23. The spindle carries a penetrator (not shown) at its lower end which is adapted to be pressed into a specimen by the action of the test load applied to the spindle by the levers.

This check or resistance device, as best shown in Fig. 2 of the drawing, is provided with a housing 116 containing a cylinder 117 and a fluid reservoir 118. Fluid is supplied from the reservoir to the cylinder through an opening 119 and is returned from the cylinder to the reservoir through an opening 120. A piston 121 is arranged for reciprocation in the cylinder and has a piston rod 122 projecting through the cover 123 of the housing. To produce the desired dash-pot or resistance effect the piston may be provided with a restricted opening 125, through which the resistance fluid is forced by the downward movement of the piston after the latter has closed the opening 119.

An operative connection between the check device and the testing mechanism may be established by providing the piston rod with a cross-bar 126, the ends of which are connected to the ends of the pivot pin 74 by means of rods 127. The check device offers little or no resistance to upward movement of the weight 70, but the downward movement of the weight is retarded and timed by the dash-pot action which is produced as the result of the restricted flow of fluid through the piston opening 125.

To eliminate the undesirable effects which would be produced by changes in the viscosity of the resistance fluid of the check device, I provide means for maintaining the resistance fluid at a substantially uniform temperature. This means may, as shown in the drawing, comprise an electric heater 130 which is arranged adjacent some suitable portion of the check device, such as beneath the reservoir 118, and a thermostatic switch 131. The thermostatic switch is also suitably located on the check device, as adjacent the reservoir, and is suitably connected with the electric heater 130 and with a source

of current supply. The thermostatic switch automatically controls the supply of heat to the resistance fluid by the electric heater and thus maintains the resistance fluid at a substantially uniform temperature, such that the resistance to flow of the fluid through restriction 125 will not be affected or varied as the result of temperature changes in the room or building in which the testing machine is located.

It will thus be seen that by providing my hydraulic check device with heating means operable to maintain the resistance fluid at a substantially uniform temperature, I eliminate the effects due to changes in the viscosity of the fluid and obtain a substantially uniform dash-pot effect or resistance action. This uniform resistance characteristic makes my hydraulic check device especially suitable for use with weighing scales, testing machines, and all other machines or equipment where a resistance action independent of viscosity changes is desirable. It will be seen furthermore that the thermostatically controlled electric heater embodied in my improved device provides a simple and inexpensive means for accomplishing this desirable result.

It will be understood of course that I do not wish to be limited to the details of construction or arrangements of parts of the device as herein disclosed, nor to any particular field of use, but regard my invention as including such changes and modifications as to not involve a departure from the spirit of the invention and the scope of the appended claim.

Having thus described my invention, I claim:

In a device of the character described the combination of a cylinder, a piston operable in the cylinder, fluid in the cylinder for resisting movement of the piston, means providing for a restricted discharge of resistance fluid, a reservoir housing having a chamber communicating with the cylinder and containing a supply of resistance fluid, an electric heater, and a thermally responsive switch automatically operable to control said heater for maintaining the fluid at a substantially constant temperature, said heater and switch being located in said reservoir housing.

JOSEPH GOGAN.