Nov. 5, 1940. A. J. FOUTE 2,220,515

PILOT LIGHT ASSEMBLY

Filed Jan. 24, 1938

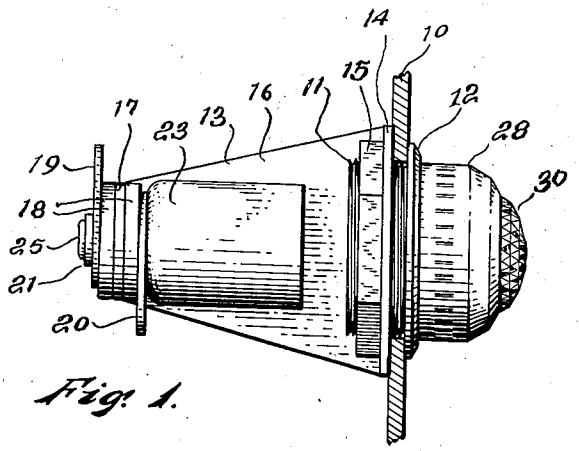

Fig. 1.

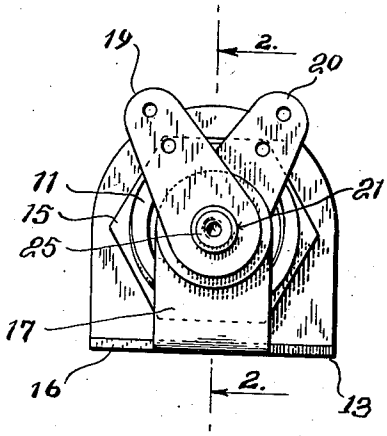

Fig. 3.

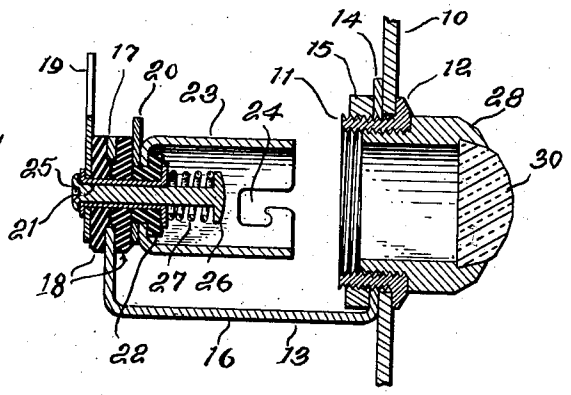

Fig. 2.

INVENTOR:
Albert J. Foute,
BY:
Christian K. Nielsen
ATTORNEY

Patented Nov. 5, 1940 2,220,515

UNITED STATES PATENT OFFICE

2,220,515

PILOT LIGHT ASSEMBLY

Albert J. Foute, Chicago, Ill., assignor to Drake Manufacturing Co., Chicago, Ill., a partnership consisting of Albert J. Foute and Irman D. Foute

Application January 24, 1938, Serial No. 186,710

1 Claim. (Cl. 173—339)

The invention relates to lamp mountings, and particularly to panel mountings for lights such as signal lights, pilot lights and illuminating devices. The invention has been specifically embodied as a signal lamp specially suitable for mounting in the dash or other similar panel of airplanes, automobiles, cabinets, and other places.

It is a special object of the invention to present a construction which will enable the production of the device at an extremely low cost, and which will have advantages in facility of mounting, replacement of lamps and efficiency in many respects. Thus, it is a particular aim to enable the lamp to be cooled effectively without heating the mounting panel excessively. Another object is to enable the body of the article to be formed from flat sheet stock by a simple blanking and bending procedure. A still further aim is to enable more ready attachment of lead wires to the terminals of the fixture. Another important object is to enable a plurality of similar devices to be mounted in exceedingly close mutual relation on an instrument panel or the like, yet enabling quick replacement of lamps with ease.

It is a special object to present a lamp mounting which, while being of extremely open formation will nevertheless have a minimum liability of short circuit.

Additional objects, advantages and features of invention reside in the construction, arrangement and combination of parts involved in the embodiment of the invention as will appear, or be more particularly set forth hereinafter in the description, and shown in the drawing, wherein:

Figure 1 is a top view of the complete unit engaged in a panel.

Figure 2 is a vertical sectional view of the device in place.

Figure 3 is an inner end elevation of the device.

There is illustrated a portion of an instrument panel, dash or cabinet 10, having a suitable aperture therethrough to receive the mounting now to be described. A tubular ferrule 11, externally threaded, and having a peripheral outer lip or flange 12, is inserted through the apertured front face of the panel, projecting beyond the rear side of the panel a distance, and its flange engaging snugly the front face of the panel. A body frame piece 13 is provided consisting of a wide vertical collar portion 14 apertured to receive the inner part of the ferrule therethrough in threaded engagement or slidably, as preferred. It is held against the rear face of the panel 10 by a suitable nut 15 screwed thereon. The collar is projected downwardly a short distance with material of a width equal to its full diameter, although the proportion may be modified as desired, and as close beneath the nut as practicable it is bent outwardly at right angles to the collar in a planiform plate 16 cut to a substantially frusto-triangular form, and continued with a narrow extension of uniform width for a distance. This extension is bent upwardly at right angles forming a vertical assembly plate or bracket stud 17 extending across the projected axis of the aperture in the collar 14, and having a smaller aperture formed therein concentric with the aperture in the collar.

On each side of this plate 17 insulating washers 18 are disposed having bushing bosses engaged in the aperture of the plate, and outwardly of these washers in turn there are wiring terminal ears or arms 19 and 20 extended radially with respect to the axis of the device, the outer one being held in place by the upset outer end of an assembly tube 21, of much smaller diameter than the aperture in the plate 17 and engaged through the washers 18 and beyond. The inner arm 21 is formed with an aperture concentric with and much larger than the tube 21, and having a bushing 22 therein receiving the tube 21 therethrough and flanged at its inner part. It is held by an inner flange on the tube 21 snugly fitted against the bushing. Also held under the flange of the bushing 22 is the suitably apertured inner end of a cup-like lamp receptacle 23 having a cylindrical tubular wall portion projected horizontally toward the ferrule 11, but stopping short thereof a distance, although the latter is not essential, and if necessary for any reason, as for instance, mounting an accessory, the ferrule may be extended around the receptacle. The ferrule however, being of sufficiently larger diameter, would then lie in radially spaced relation to the receptacle. The wall of the cup may be formed with the conventional bayonet slots as at 24, to receive and retain the lamp base of a standard form of lamp now generally applied to such receptacles.

Slidable in the tube there is a contact pin 25, having a head at its inner end under which and engaged around the pin there is confined a helical spring 27 seated against the inner flanged end of the tube 21. The outer end of the pin 25 is upset so as to be retained in the tube 21.

The interior of the ferrule 11 may be threaded or smooth, and engaged therein is the collar or mount 28 of a bull's-eye or faceted refractor prism or lens 30. If the ferrule is not threaded, the mount 28 may have a slotted part slidable

and frictionally held in the ferrule. The mount 28 may be knurled exteriorly and may be manually detached from the ferrule either by unscrewing or by sliding movement as the case may be, to permit insertion or removal of a lamp in or from the receptacle 23 entirely by manipulation through and from the front of the panel 10. The usual lamp bulb will set free within the mount 28.

It will be seen that the device is ventilated with high efficiency, and that there is also afforded access directly to the base of the standard lamp for the socket illustrated from one side behind the rear side of the panel 10 as well as access to the lamp from the front, to facilitate removal and replacement of burned out lamps. This is an extremely important advantage in such devices owing to the fact that in a very large proportion of such lamps the glass bulb portion becomes loosened from the lamp base, so that it is impossible to rotate the base by turning the lamp bulb (which is the usual way of disengaging the lamp base from the bayonet slot). Without the extremely ample lateral access provided by my invention it would be impossible to remove the base in some instances if the bulb becomes loosened, and in any event it would be a special tool job. But with my construction, in case of separation of the bulb and base, small pliers may be engaged with the base from one side to turn the same and free it from the bayonet slot.

While I have disclosed a specific and detail construction of the invention, this is merely exemplary, and I do not regard the invention as limited thereto, but various modifications of structure may be made without departing from the spirit of the invention, as contemplated and set forth in the appended claim.

I claim:

In a pilot light assembly, a lamp receptacle and mounting therefor comprising a plate having a medial elongated body portion and right angular parallel end portions, one end portion having an aperture for reception of a means for securement to a panel or the like, the other end portion having an aperture concentric with the aperture of the first named end portion, a lamp receptacle concentric with the aperture of the first named end portion mounted on the inner side of the second named end portion, said second named end portion having insulation material on opposite sides thereof, a wire terminal arm outwardly thereof and the said lamp receptacle inwardly thereof and including a second wire terminal arm, insulation being extended through said receptacle and overlapping a part of the same, a tubular assembly tube engaged through the insulation having one end out-turned over the first named wire terminal arm and the other out-turned to clamp said insulation, receptacle and bracket plate, and a spring-pressed contact slidable in said tube to engage a lamp base.

ALBERT J. FOUTE.