US00D623132S

(12) **United States Design Patent**
Yano

(10) **Patent No.: US D623,132 S**
(45) **Date of Patent: ** Sep. 7, 2010**

(54) **SUPPORTING BASE FOR PORTABLE ELECTRONIC DEVICE**

(75) Inventor: **Ken Yano**, Tokyo (JP)

(73) Assignee: **Sony Computer Entertainment Inc.**, Tokyo (JP)

(**) Term: **14 Years**

(21) Appl. No.: **29/347,137**

(22) Filed: **Sep. 29, 2009**

(30) **Foreign Application Priority Data**

May 22, 2009 (JP) D2009-011444

(51) **LOC (9) Cl.** **13-02**
(52) **U.S. Cl.** **D13/108**
(58) **Field of Classification Search** D13/107–110, D13/118–119, 184; D14/217, 251, 253, D14/432, 434, 447; 320/107–115; 439/529, 439/534; 361/600
See application file for complete search history.

(56) **References Cited**

U.S. PATENT DOCUMENTS

D465,532	S	*	11/2002	Hussaini et al.	D21/333
D474,736	S	*	5/2003	Sagawa	D13/108
D477,604	S	*	7/2003	Lin	D14/434
D520,945	S	*	5/2006	Hayamizu	D13/108
D520,946	S	*	5/2006	Nasu	D13/108
D524,729	S	*	7/2006	Hussaini et al.	D13/108
D525,935	S	*	8/2006	Hussaini et al.	D13/108
D532,366	S	*	11/2006	Koizumi	D13/108
D540,327	S	*	4/2007	Wong et al.	D14/434
D552,185	S	*	10/2007	Hussaini et al.	D21/333
D552,611	S	*	10/2007	Hagiwara et al.	D14/434
D577,665	S	*	9/2008	Kim et al.	D13/107
D595,722	S	*	7/2009	Miyawaki	D14/447

FOREIGN PATENT DOCUMENTS

JP	D1296573	3/2007
JP	D1351976	2/2009

OTHER PUBLICATIONS

Decision to Grant in Taiwanese Patent Application No. 098304601, dated Apr. 22, 2010.

* cited by examiner

Primary Examiner—Rosemary K Tarcza
(74) *Attorney, Agent, or Firm*—Rader, Fishman & Grauer PLLC

(57) **CLAIM**

The ornamental design for a supporting base for portable electronic device, as shown and described.

DESCRIPTION

FIG. **1** is a front elevational of a supporting base for portable electronic device showing my new design;

FIG. **2** is a rear elevational view thereof;

FIG. **3** is a left side elevational view thereof;

FIG. **4** is a right side elevational view thereof;

FIG. **5** is a top plan view thereof;

FIG. **6** is a bottom plan view thereof;

FIG. **7** is a front, top, right perspective view thereof;

FIG. **8** is a front, top, left perspective view thereof; and,

FIG. **9** is a rear, bottom, left perspective view thereof.

Portions in broken lines are for illustrative purposes only and form no part of claimed design.

1 Claim, 9 Drawing Sheets

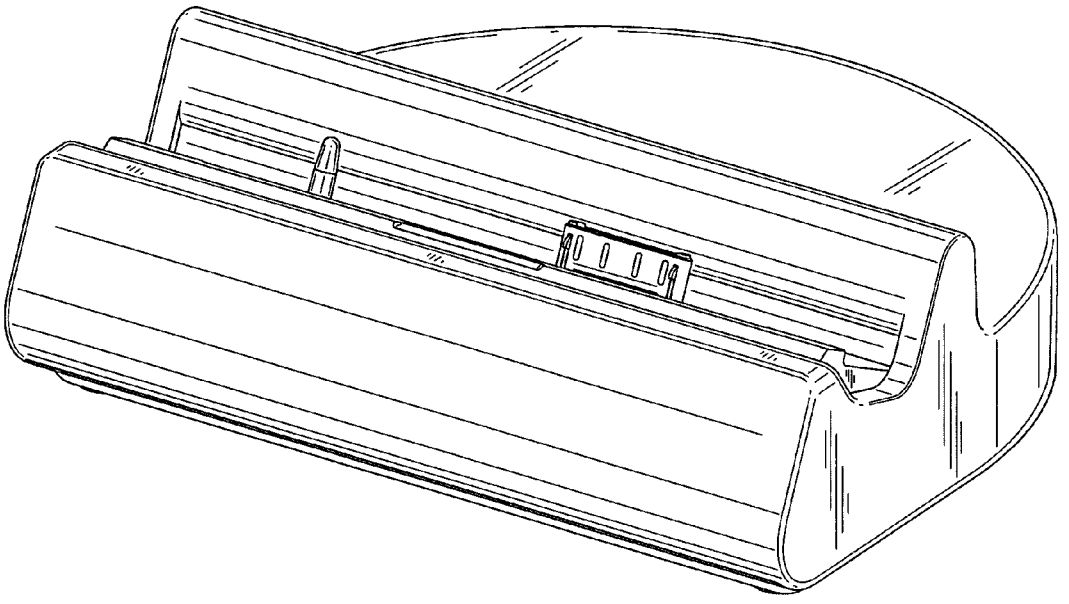

FIG.1

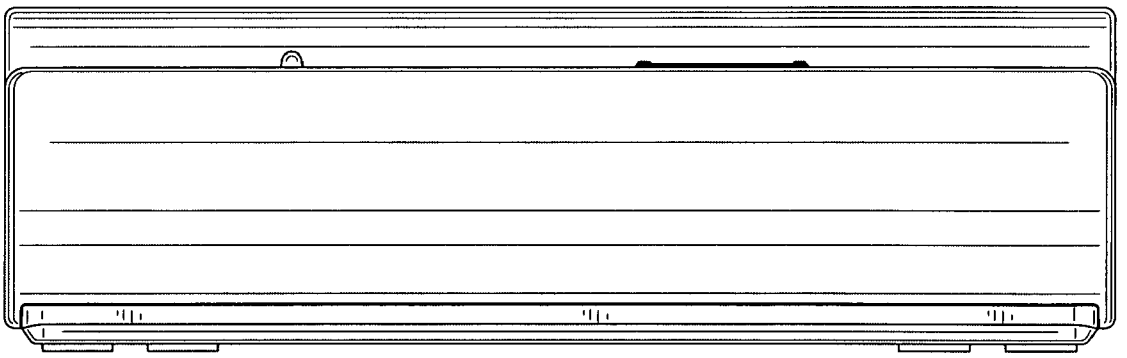

FIG.2

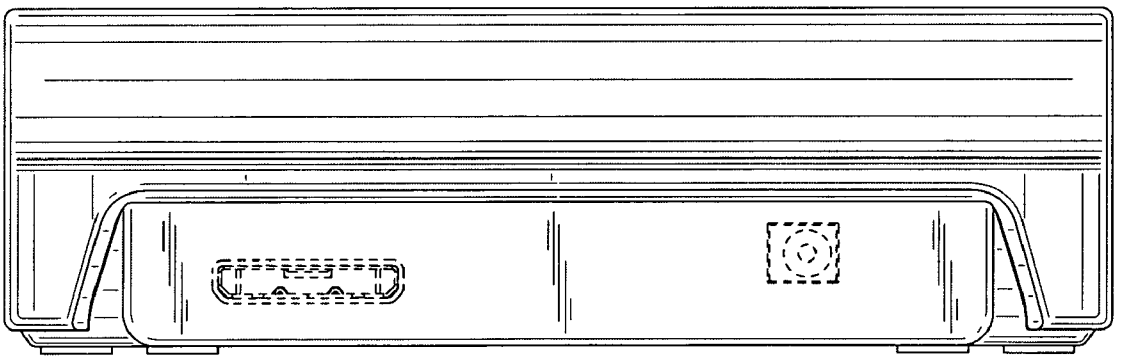

FIG.3

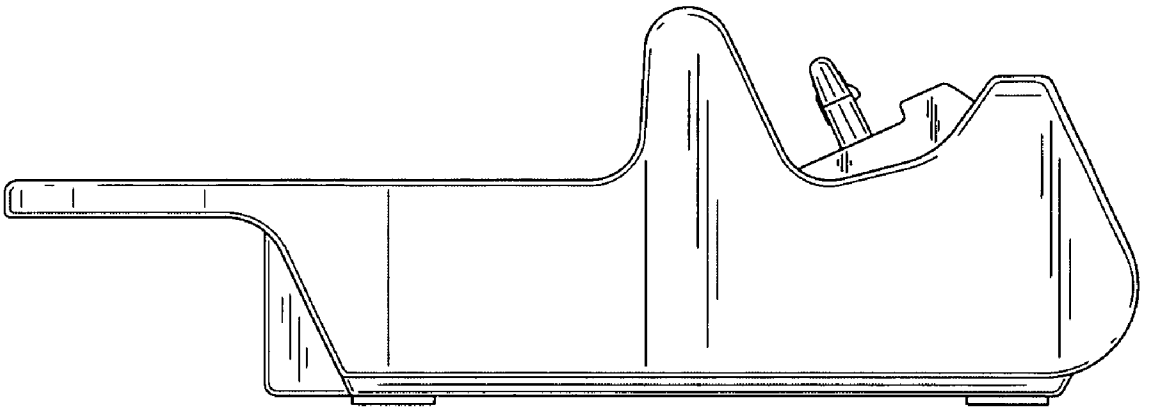

FIG.4

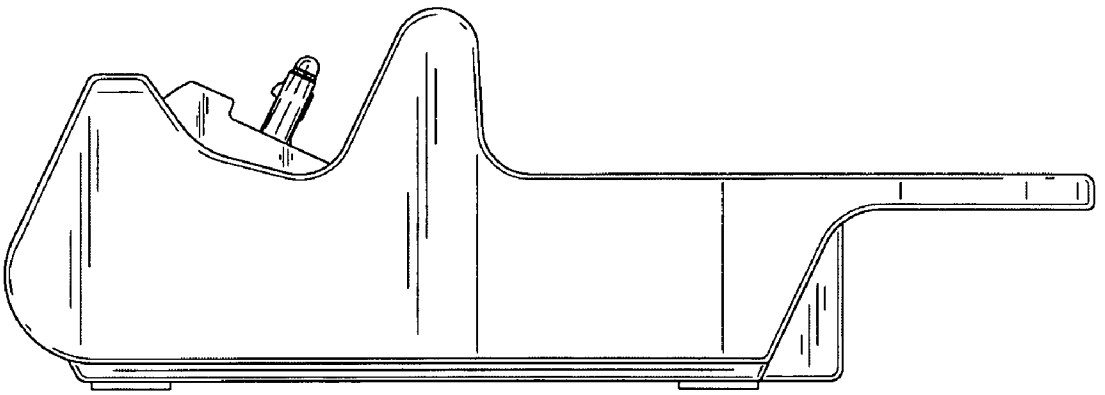

FIG.5

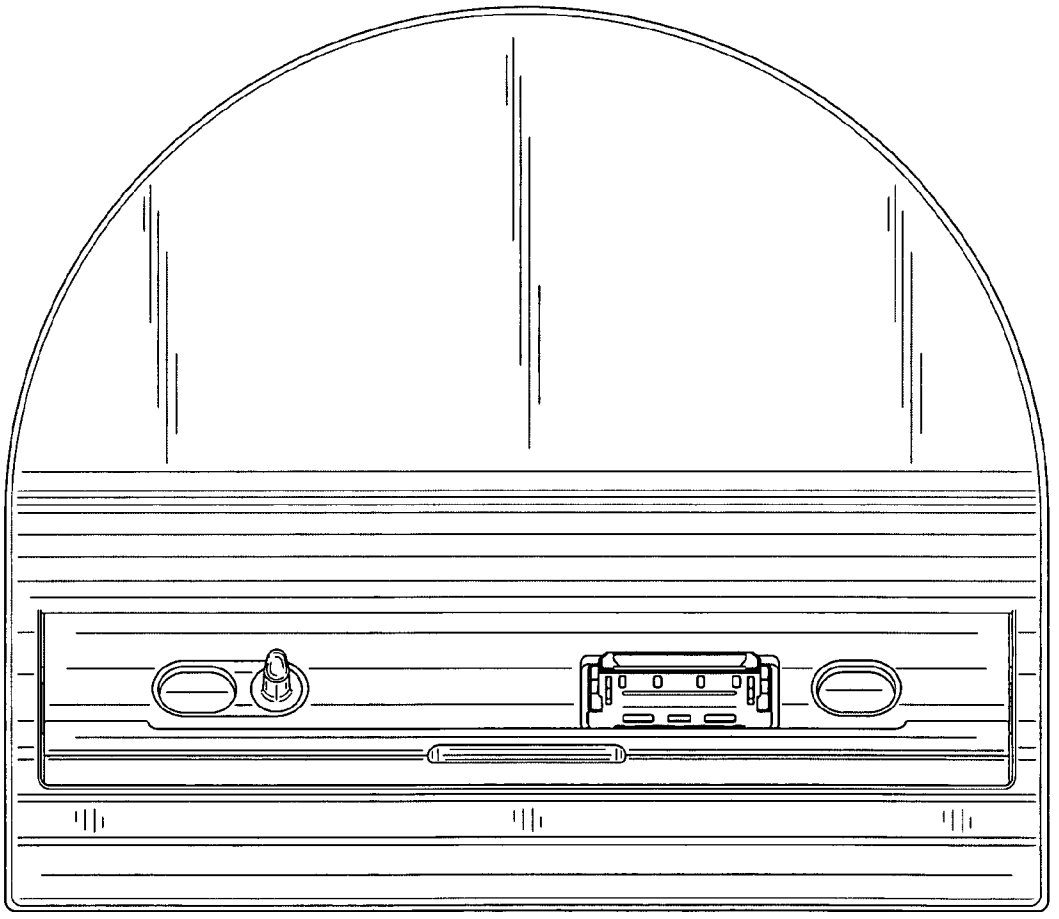

FIG.6

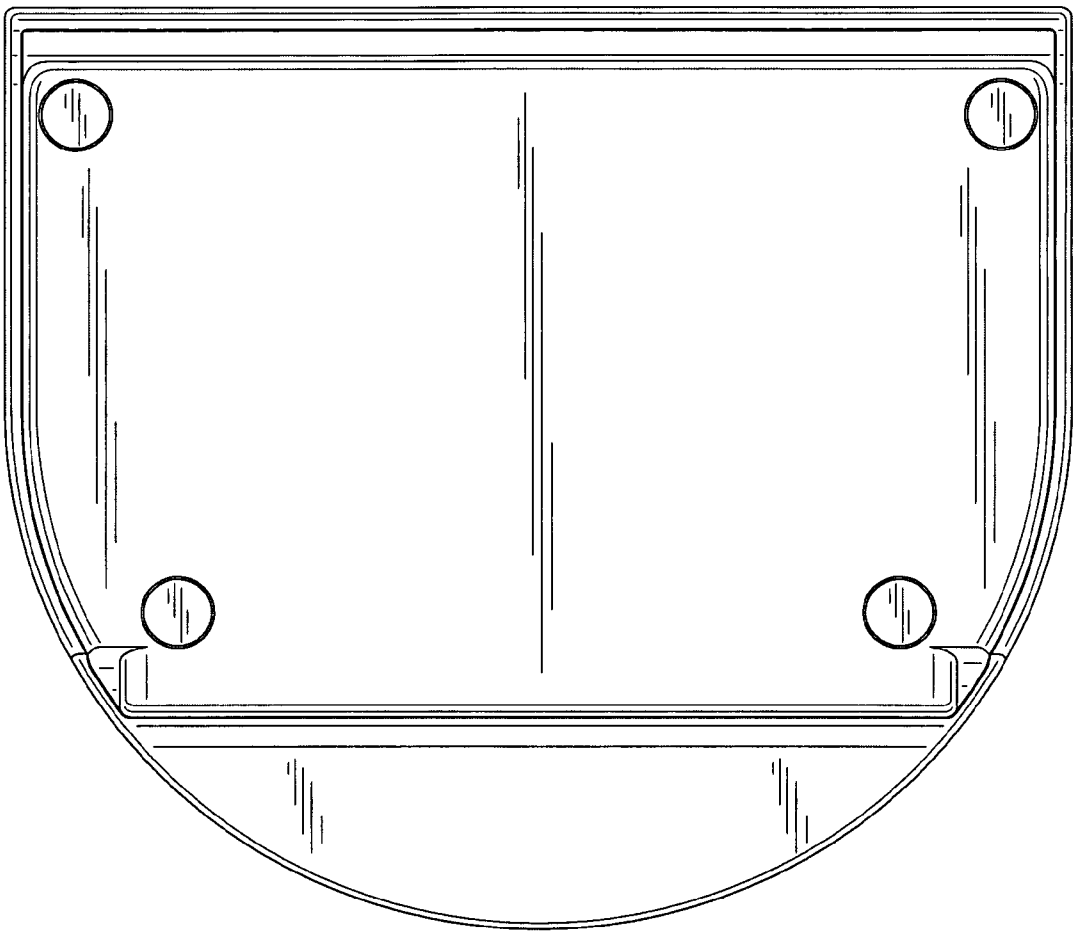

FIG.7

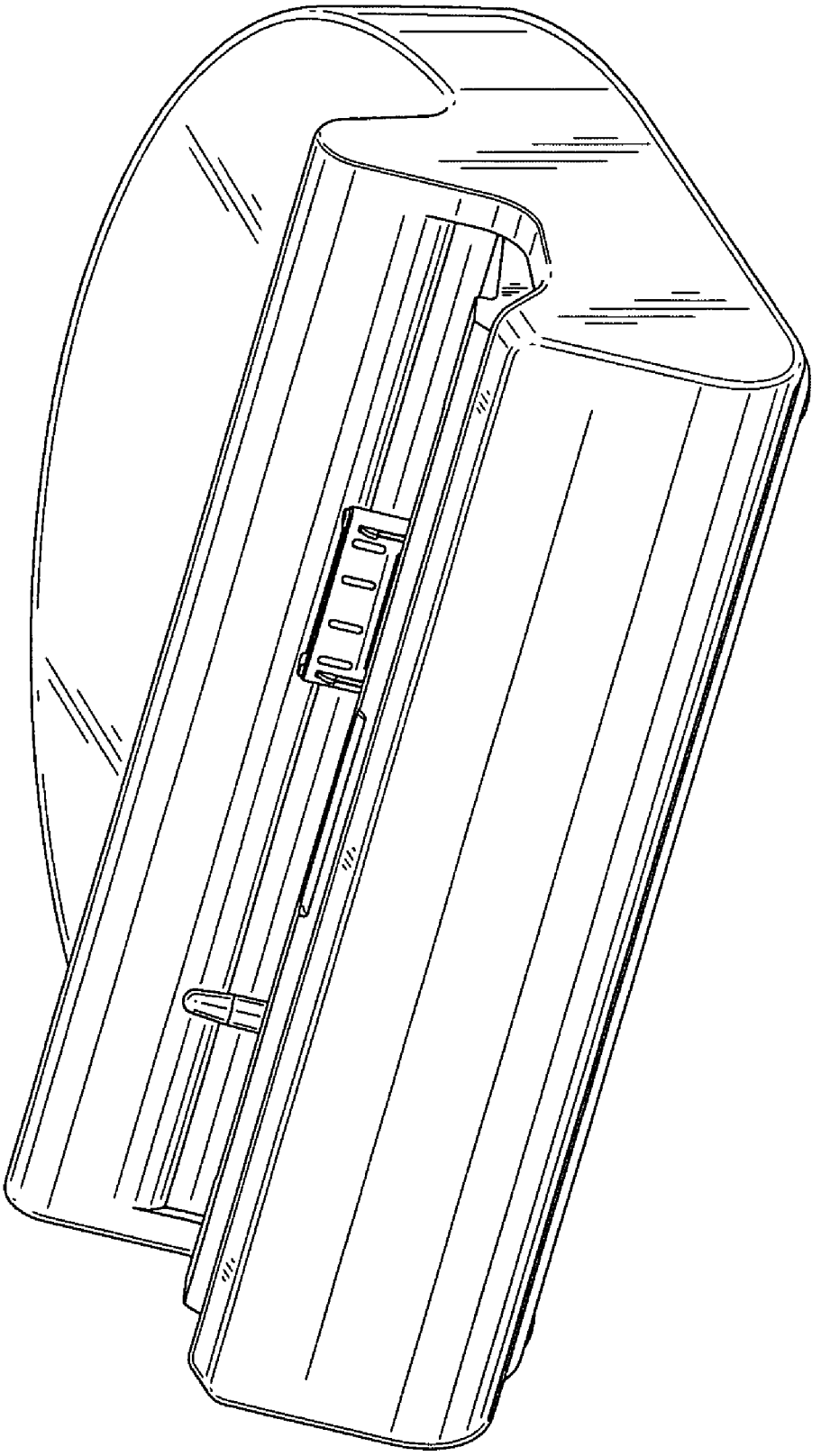

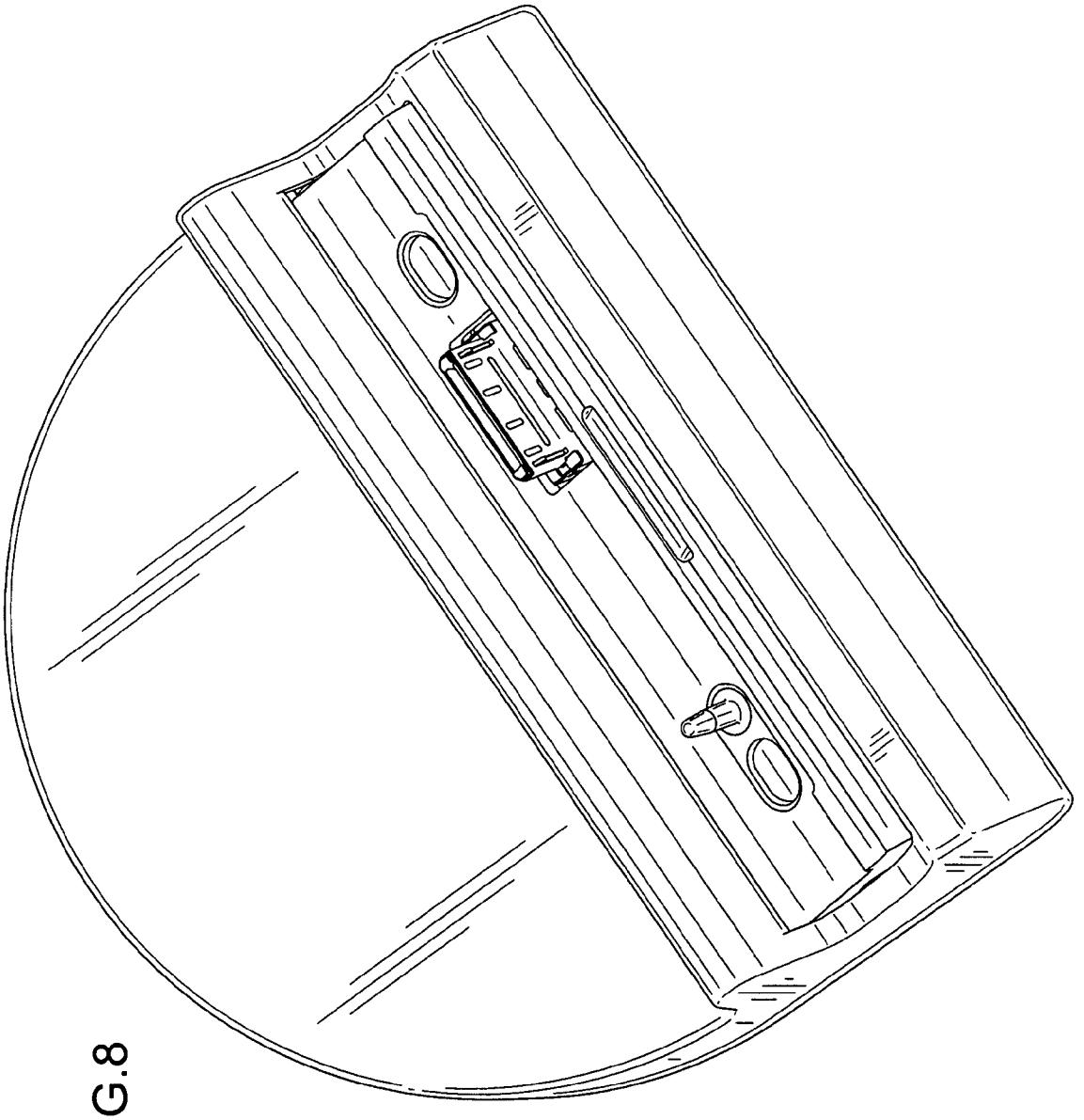

FIG.8

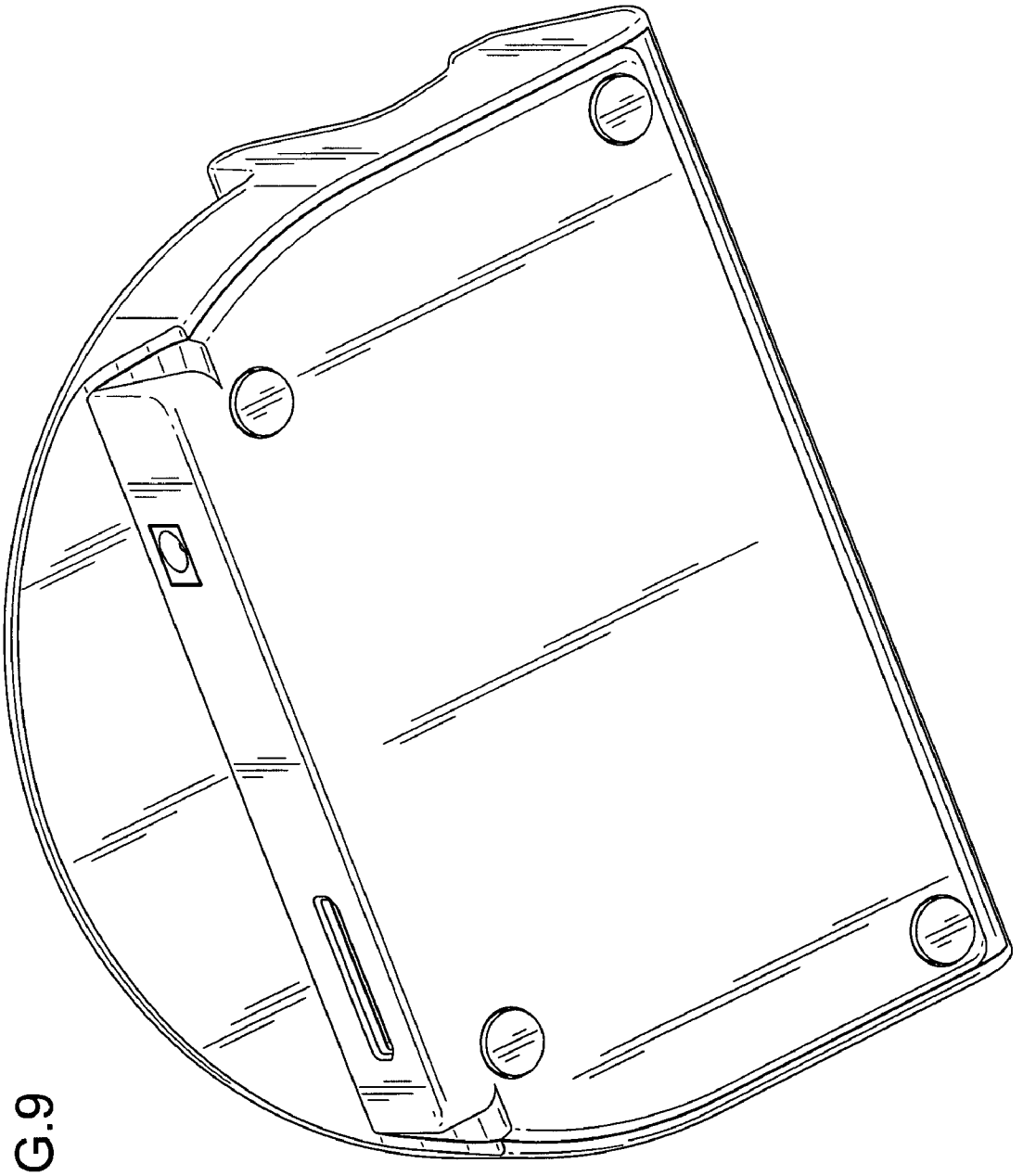

FIG.9