Nov. 23, 1954

C. R. MacDONALD

APPARATUS FOR THE MANUFACTURE OF WATERPROOFED MULTIPLY SHEETS

2,694,963

Filed April 8, 1949

2 Sheets-Sheet 1

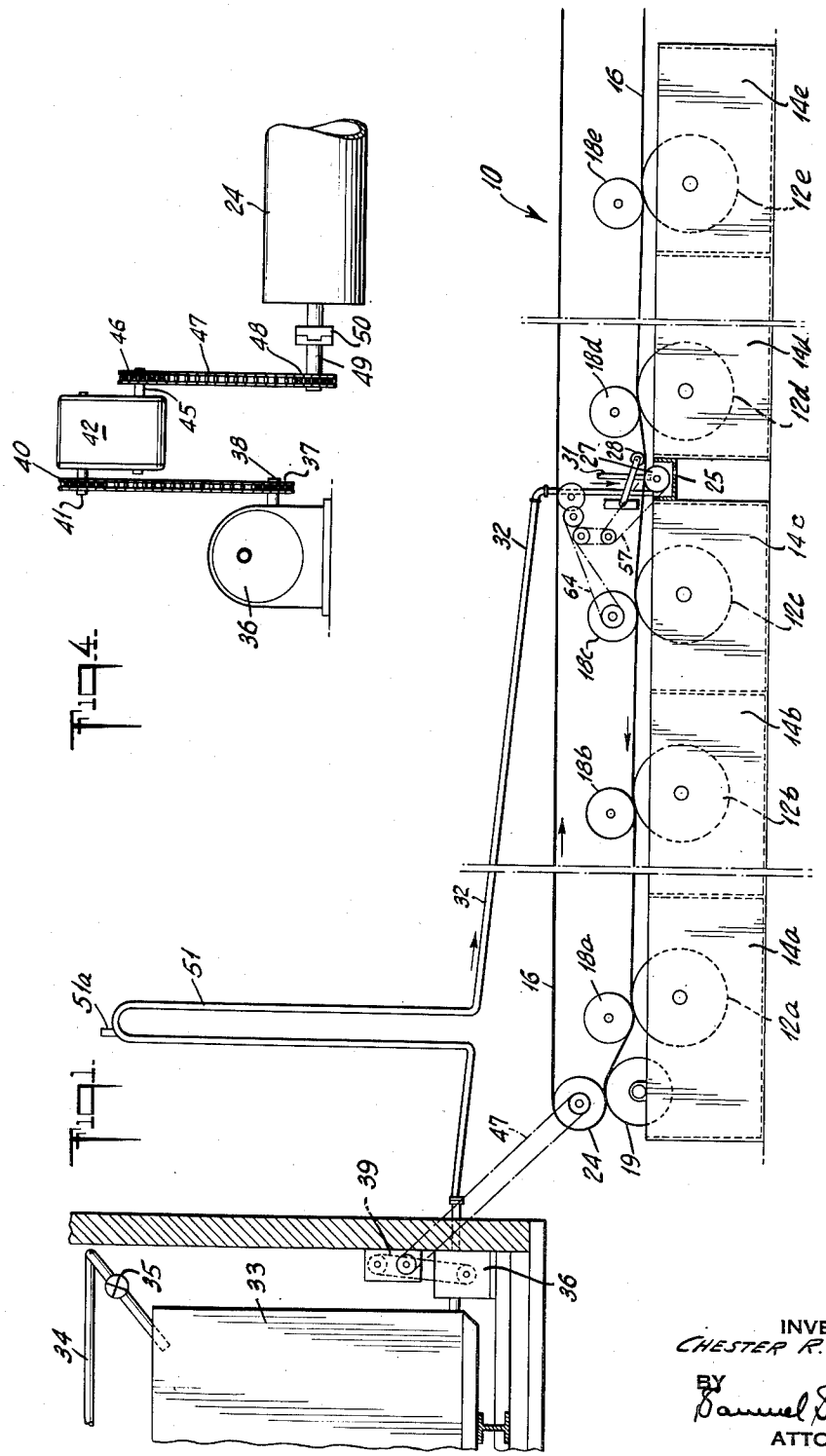

Fig. 4.

Fig. 1.

INVENTOR
CHESTER R. MACDONALD.

BY
Samuel Stearman
ATTORNEY

Nov. 23, 1954

C. R. MacDONALD

APPARATUS FOR THE MANUFACTURE OF WATERPROOFED MULTIPLY SHEETS

2,694,963

Filed April 8, 1949

2 Sheets-Sheet 2

Fig. 3.

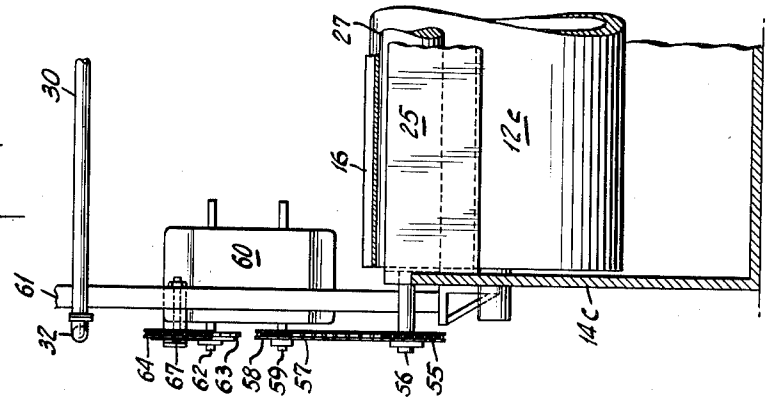

Fig. 5.

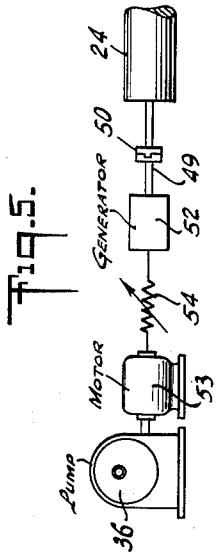

Fig. 2.

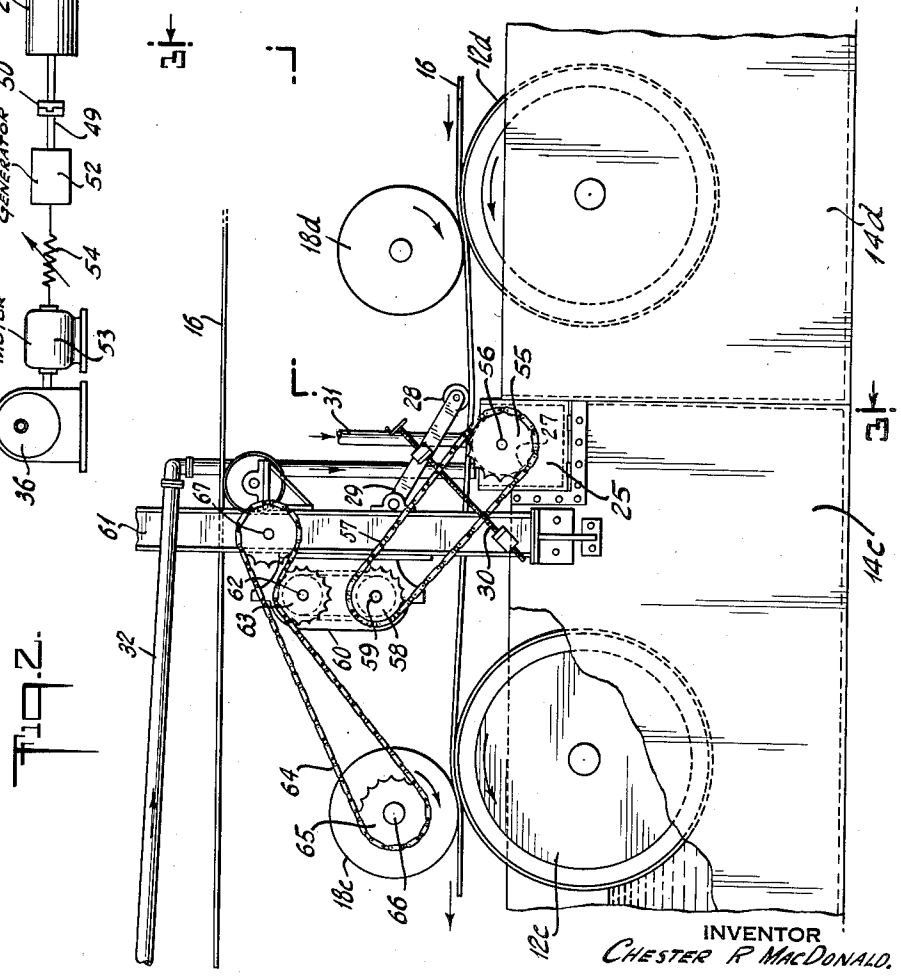

INVENTOR
CHESTER R MACDONALD.

BY
Samuel Steinman
ATTORNEY

United States Patent Office 2,694,963 Patented Nov. 23, 1954

2,694,963

APPARATUS FOR THE MANUFACTURE OF WATERPROOFED MULTIPLY SHEETS

Chester R. MacDonald, Ramsey, N. J., assignor to The Patent and Licensing Corporation, New York, N. Y., a corporation of Massachusetts

Application April 8, 1949, Serial No. 86,162

4 Claims. (Cl. 92—41)

This invention relates to improvements in apparatus for the manufacture of water-proofed multi-ply sheets wherein a film of an aqueous emulsion of bitumen or other water-immiscible substance is applied to certain of the freshly formed plies.

Water-proofed multi-ply paper or paperboard, such as boxboard, is manufactured by forming a plurality of fibrous plies on a cylinder type paper-making machine and applying a film of aqueous emulsion of bitumen or other water-immiscible substance between selected plies of the sheet simultaneously with the formation thereof. The water-proofing film is commonly applied by an emulsion applicator unit interposed between two of the cylinder moulds of the paper-making machine. This type of process is described, for example, in U. S. Patent No. 1,616,901, dated February 8, 1927. Emulsion applicator units which are used for this purpose comprise, essentially, a screen-covered roll which continuously revolves in a body of bituminous emulsion maintained in a suitable trough. A film of the emulsified bitmuen is picked up by the screen on the roll and is transferred to the lower surface of a wet fibrous ply as it passes over the applicator roll. Fresh supplies of emulsion of the requisite consistency are continuously introduced into the trough to replace the emulsion taken up by the roll.

One of the major problems encountered in this mode of manufacturing water-proofed multi-ply paper has been the application of a constant, predetermined quantity of bitumen to a unit area of the fibrous ply. It has heretofore been common practice to meter the flow of emulsion to the trough of the emulsion applicator roll by means of a weir box, as disclosed for example, in U. S. Patent 1,723,361, dated August 6, 1929. While this device does effect some control over the flow of emulsion, it is dependent upon manual operation and is difficult to regulate when varying machine speeds are encountered. As a result, only an approximate control of the flow of emulsion is realized and the application of a uniform film of emulsion at all times is difficult.

It is the principal object of this invention to provide apparatus for the formation of water-proofed multi-ply sheets wherein the flow of the water-proofing material from a supply to the applicator unit can be accurately controlled.

It is a further object of the invention to provide apparatus of the character indicated wherein the flow of waterproofing material is accurately and automatically controlled in response to variations in the speed of the sheet-forming machine.

According to the invention I provide, in combination with a sheet-forming machine of the cylinder type having a plurality of cylinder moulds and an emulsion applicator unit interposed between at least two of the cylinder moulds, a driven roll, a reservoir of liquid water-proofing emulsion, a positive displacement pump adapted to transfer the emulsion from the reservoir to the emulsion applicator unit, and means for driving the pump in response to the rotation of the driven roll. By the term driven roll is meant a roll driven by the blanket or felt of the paper-making machine. Thus, the driven roll may be a couch roll, a strain or breast roll, a suction roll, or other roll driven by frictional contact with the blanket. Preferably, a variable speed element forms part of the driving means between the pumping means and the driven roll, whereby the ratio between the speed of the pump and the speed of the

driven roll can be accurately adjusted at will. In addition to control of flow of emulsion to the applicator unit in this manner, I also provide a driving connection between one of the driven elements of the sheet forming machine and the emulsion applicator roll, with a variable speed element forming part of this driving connection.

It is a feature of the invention that the prescribed combination of elements permits the application at all times of a uniform, predetermined quantity of emulsion to a unit area of the fibrous plies as they are formed on the sheet-forming machine, regardless of the speed of the machine or variations thereof.

Other objects and features of the invention will be apparent from the following description and from the drawings in which,

Fig. 1 is a side view in elevation of a machine embodying features of the invention,

Fig. 2 is an enlarged view in elevation of the emulsion applicator unit and adjacent portions of the sheet-forming machine,

Fig. 3 is a view partly in elevation and partly in section, taken approximately along the line 3—3 of Fig. 2,

Fig. 4 is a diagrammatic view showing the relative positions of the driven roll, the pump and a mechanical variable speed element,

Fig. 5 is a diagrammatic view of an electrical driving connection between the driven roll and the positive displacement pump.

Referring to the drawings, the numeral **10** designates generally a sheet-forming machine of the cylinder type comprising a series of cylinder moulds **12***a*, **12***b*, **12***c*, **12***d* and **12***e* rotatably positioned in vats **14***a*, **14***b*, **14***c*, **14***d* and **14***e*, respectively. The felt or blanket **16** passes over each of the cylinder moulds and receives the newly formed fibrous plies as it is pressed against the respective cylinder moulds by the action of couch rolls **18***a*, **18***b*, **18***c*, **18***d* and **18***e*, respectively. In the embodiment illustrated, the felt **16** after leaving cylinder mould **12***a* is supported on idler roll **19** and the felt **16** reverses its direction of travel as it passes around a strain or breast roll **24**, which may be a suction roll of known construction, positioned above roll **19**. The cylinder moulds, the couch rolls, the idler roll **19** and the breast roll **24** are all driven rolls, i. e. they are driven by the felt **16**. The felt **16** is conveniently driven in the usual manner by press rolls (not shown) positioned at the point where the multiply sheet is removed from the felt, or it may be driven by any other convenient means.

The water-proofing film such as a film of aqueous bituminous emulsion is applied by an emulsion applicator unit interposed between two of the cylinder mould vats. Referring to Fig. 1, an emulsion applicator unit, which comprises a trough **25** in which is rotatably mounted a roll **27**, is positioned between vats **14***c* and **14***d*. The emulsion applicator unit may be positioned between other of the vats depending on the desired location of the waterproofing film in the finished multi-ply sheet. If desired, two or more emulsion applicator units may be employed. The roll **27** picks up a film of bituminous emulsion maintained in trough **25** and applies it to the underside of the fibrous ply which is received by felt **16** from cylinder mould **12***d* and carried over roll **27**. The blanket **16** is maintained in contact with roll **25** by a tension roll **28** rotatably mounted in pivoted arms **29**. The pressure exerted by tension roll **28** is regulated by a threaded tension adjuster **30**.

During the operation of the machine, aqueous emulsion is continuously introduced into trough **25**. Dilution water is supplied, for example, through a pipe **31**. Sufficient water is introduced to maintain the diluted emulsion in trough **25** at a predetermined level at all times. The flow of dilution water may be regulated by any convenient means, as by a float valve, or by the means described in U. S. Patent 1,723,361, previously mentioned.

Aqueous emulsion is continuously supplied to trough **25** through a conduit **32** leading from an emulsion reservoir **33**, which, in the embodiment illustrated, is a tank into which emulsion may be intermittently or continuously charged through a pipe **34**, controlled by a valve

35. Preferably, a second tank (not shown) is connected in parallel with tank 33, whereby emulsion may be drawn from either tank through conduit 32. This permits continuous withdrawal of emulsion from one tank while the other tank is being filled and vice versa.

The flow of emulsion from reservoir 33 to trough 25 of the emulsion applicator unit is controlled by a positive displacement pump 36, such as a diaphragm pump, interposed in conduit 32. According to my invention, the pump 36, which controls the volume of emulsion flowing to the trough 25 per unit of time, is actuated by one of the driven rolls of the sheet forming machine, preferably through a variable speed regulating device. Referring to Fig. 4, sprocket wheel 37 on the shaft 38 of pump 36 is connected as by chain 39 to sprocket wheel 40 mounted on shaft 41 of a variable speed transmission device 42. The variable speed transmission device 42, one commercial form of which is known as a Reeves drive, has a second shaft 45 on which is mounted a sprocket wheel 46. Sprocket wheel 46 is connected by a sprocket chain 47 to a sprocket wheel 48 which in turn is mounted on a shaft 49 of roll 24. Shaft 49 suitably is provided with a clutch 50, in order that sprocket wheel 48 may, if desired, be disengaged with respect to roll 24, as when it is desired to use the paper making machine 10 to form multi-ply paper without applying a water-proofing film between the plies. In the embodiment illustrated, the emulsion reservoir 33 is positioned above the level of the emulsion applicator unit. In order to prevent gravity flow of the emulsion through conduit 32, a column 51 is formed in conduit 32 and a vent 51*a* is provided in order to avoid the possibility of syphoning. When the reservoir 33 is positioned below the emulsion applicator unit, the column 51 can, of course, be eliminated.

In the embodiment illustrated in Fig. 4, the driving connection between roll 24 and pump 36 is a wholly mechanical one. It will be apparent to those skilled in the art, however, that other types of driving connections may be used. For example, the connection between roll 24 and pump 36 may be electrical or partly electrical and partly mechanical. Referring particularly to Fig. 5, an embodiment is shown in which the shaft 49 of roll 24 is connected to a generator 52. Generator 52 is electrically connected to a motor 53, which in turn drives shaft 38 of pump 36. The variable speed device in this case is a variable resistance 54 interposed in the line between generator 52 and motor 53.

Thus, in accordance with my invention, I provide, for driving the pump, which feeds the emulsion to the applicator unit, by a driven roll of the paper-making machine. The rate of flow of emulsion from the emulsion reservoir 33 to the emulsion applicator trough 25 is thus governed in response to the speed of the paper-making machine. With this arrangement of elements, the pump responds instantly and automatically to every variation in the speed of the paper-making machine and the human error inherently a part of the operation of the weir box of the prior art is eliminated. Application of a uniform film of bitumen is assured at all times regardless of machine speeds. When different types of sheets are to be made and greater or lesser quantities of bitumen per unit area of sheet are to be applied, the desired quantity of bitumen can be regulated by adjusting the setting of the variable speed device, e. g. the variable speed transmission unit 41 or the variable resistance 54. In this manner the volume of emulsion supplied by pump 36 corresponds accurately to the area of the web that passes over the applicator roll, and this, in conjunction with the constant level of emulsion maintained in the trough 25, automatically controls the rate of spread of emulsion on the web, independently of variations in the surface characteristics of the web.

The speed of revolution of emulsion applicator roll 25 may also be suitably controlled with respect to the speed of blanket 16 by means of a driving connection between the emulsion applicator roll 25 and a driven roll, e. g. a couch roll. As in the case of the positive displacement pump 26, this driving connection may be mechanical or electrical. Referring more particularly to Fig. 2 and Fig. 3, a sprocket wheel 55 mounted on shaft 56 of roll 25 is connected, by means of a sprocket chain 57, to a sprocket wheel 58 mounted on shaft 59 of a variable

speed drive unit 60 mounted on a column 61. The second shaft 62 of variable drive unit 60 carries a sprocket wheel 63 which is mechanically connected by means of a sprocket chain 64 to a sprocket wheel 65 mounted on shaft 66 of couch roll 18*c*. An idler sprocket wheel 67 rotatably mounted on column 61 serves to reverse the direction of travel of sprocket chain 63 in order that sprocket wheel 62 will be driven in the desired direction. By suitable adjustment of the variable drive unit 60 the roll 25 may be caused to revolve at the same peripheral speed as couch roll 18*c*, i. e. at the rate of travel of blanket 16 or, if desired, the roll 25 may be caused to revolve at a faster or at a slower peripheral speed than that of the blanket 16. Instead of the mechanical driving connection described above, an electrical driving connection, similar to that shown in Fig. 5 in connection with pump 36 may, if desired, be used.

It will be apparent that various changes and modifications may be made without departing from the scope of the invention as defined in the appended claims and it is intended that all matter contained in the foregoing description and in the drawings shall be interpreted as illustrative and not in a limiting sense.

I claim:

1. In combination with a paper making machine of the multicylinder blanket type, an emulsion applicator unit interposed between two cylinder moulds, a reservoir adapted to contain a supply of aqueous emulsion, a positive displacement pump adapted to receive said emulsion from said reservoir and discharge it in said applicator unit, separate water supply means connected to said applicator unit to maintain a constant predetermined level of a mixture of water and aqueous emulsion in said unit, and driving means for said positive displacement pump proportionate to the lineal speed of travel of the blanket of the paper machine connecting said pump and a roller rotating at blanket speed.

2. The combination as defined in claim 1 wherein the driving means for said positive displacement pump includes a variable speed element for regulating the ratio between the linear speed of the paper machine blanket and the pump speed.

3. The combination as defined in claim 1 wherein the driving means for said positive displacement pump is an electric motor deriving its power from a generator which is proportionate to the speed of travel of the blanket of the paper machine.

4. A paper making machine of the cylinder type having a plurality of cylinder moulds, a sheet carrying blanket arranged to receive the fibrous webs formed on said cylinder moulds, a plurality of moulds driven with frictional engagement with said blanket, in combination with an emulsion applicator unit interposed between two of said cylinder moulds, a reservoir adapted to contain a supply of aqueous emulsion, a positive displacement pump connected to receive emulsion from said reservoir and to discharge said emulsion into said applicator unit, driving connections between said positive displacement pump and a roller rotating at blanket speed arranged to deliver emulsion from said reservoir to said applicator unit at a rate proportionate to the lineal speed of the blanket, separate water supply means connected to said applicator unit to maintain constant predetermined level of a mixture of water and aqueous emulsion in said unit, an applicator roll rotatably mounted in said applicator unit and arranged to apply a film of the mixture of aqueous emulsion in water to the fibrous web received by the blanket from one of the said cylinder moulds, said applicator roll driven at a speed proportionate to the speed of said blanket.

References Cited in the file of this patent

UNITED STATES PATENTS

Number	Name	Date
Re. 18,449	Signor	May 3, 1932
1,606,428	Kirschbraun	Nov. 9, 1926
1,869,148	Holcomb	July 26, 1932
1,936,049	DeMers et al.	Nov. 21, 1933
2,329,034	Buck et al.	Sept. 7, 1943
2,411,416	Dieckbrader	Nov. 19, 1946