March 28, 1967 M. D. FAIGE 3,311,788

SYSTEM FOR FIRING SERIES-CIRCUIT BLASTING CAPS

Filed July 23, 1964

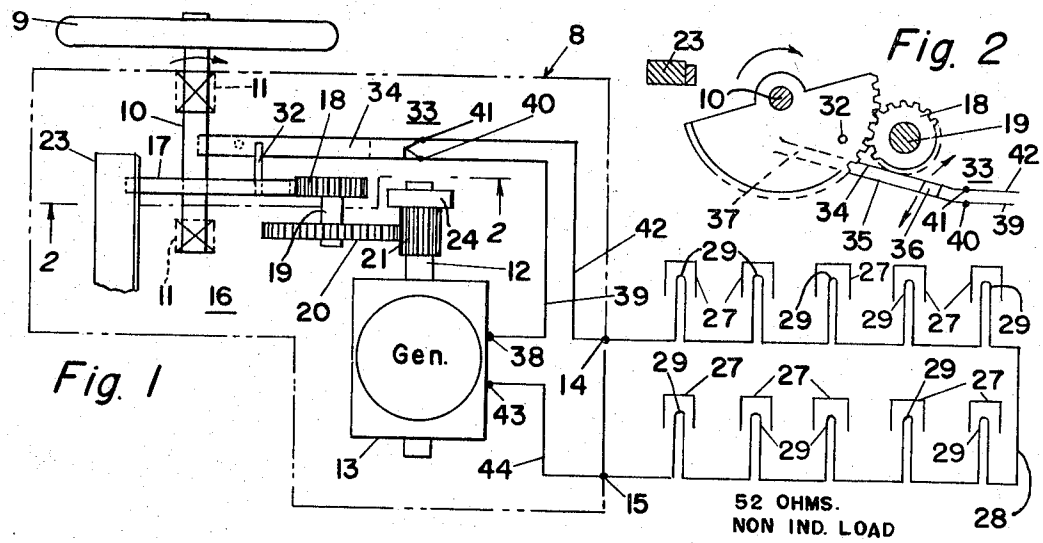

Fig. 1

Fig. 2

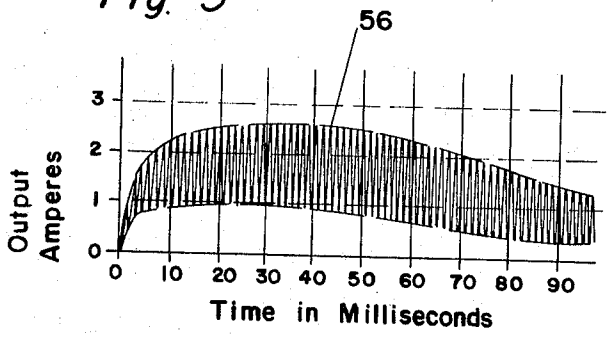

Fig. 3

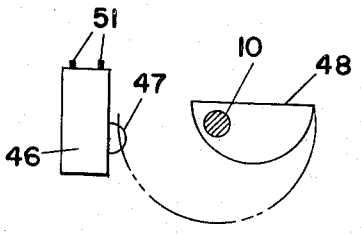

Fig. 5

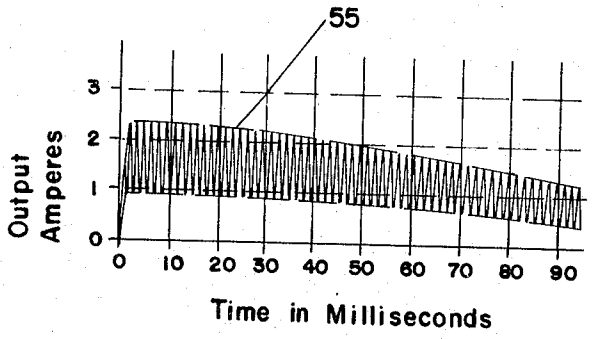

Fig. 4

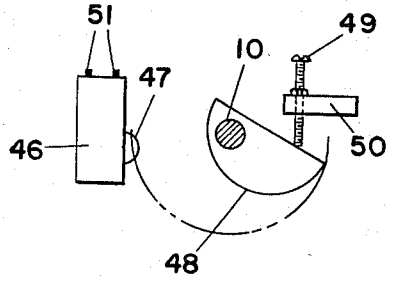

Fig. 6

INVENTOR.
MILTON D. FAIGE,
BY Harry M Saragovitz
Edward J Kelly
Herbert Berl Jr
S. Dubroff
ATTORNEYS

United States Patent Office 3,311,788
Patented Mar. 28, 1967

3,311,788

SYSTEM FOR FIRING SERIES-CIRCUIT BLASTING CAPS

Milton D. Faige, 36 De Kalb Place,
Morristown, N.J. 07960

Filed July 23, 1964, Ser. No. 384,814
4 Claims. (Cl. 317—80)

The invention described herein may be manufactured and used by or for the Government for governmental purposes without the payment to me of any royalty thereon.

The present invention relates to electrical blasting machines, and more particularly to a system for firing a plurality of blasting caps thereby, in a series circuit.

Blasting machines of the type referred to have been built and used for many years as is known, and include rotary electric generator means generally manually-operated or manually-driven by twist-action detachable key means, or plunger means, through a connecting gear train. The electric current output is used to activate or fire a quantity of blasting caps connected in electrical series.

Because of the manual drive, and thus variations in applied driving power, the output may not always be sufficient for a desired, substantially-perfect, degree (99%) of reliability in firing all blasting caps in a series. This is particularly true of the machines with the twist-action key type drive.

To obtain safety of operation in the field through sufficient output, considerable effort has been made over the past years both by commercial organizations as well as the government. Such efforts to the present have been concentrated mainly on increasing the total output capability of the generators. In a further effort to fire all caps in a series at the same instant, such machines have also been provided with switch means in the output circuit which is closed mechanically near the end of the manual stroke or power application, and kept closed to pass current to the caps when the generator speed is near maximum and after.

These and other known expedients have failed to attain the desired high degree of reliability in firing series blasting circuits by machines of electric-generator manually-driven type, which are practically the only type now in use. Furthermore it is known that the use is extensive, as indicated by the more than one-hundred million blasting caps used in this country alone in one year. The Armed Forces use blasting machines in considerable quantity for military and other applications, and have the same problems in firing with a high degree of reliability. It is known that presently available machines are never reliable in operation under all conditions of operation in the field.

Therefore, it is a primary object of the present invention to provide an improved system for the safe firing of series-connected electrically-activated (current ignited) blasting caps by manually (plunger or key)-operated electric-generator type blasting machines.

It is a further object of the present invention to provide an improved system for firing series-connected blasting caps by machines of the type referred to, which applies maximum electrical output thereto during an initial time interval of relatively short duration, and thereby provides a relatively high degree of firing reliability in the field under all conditions of operation.

It has been found, in accordance with the invention, that the use of the utmost peak power or current output of the generator for a relatively short initial time interval must be assured for maximum reliability, rather than a current build-up and peak, as heretofore assumed and provided for. Increase in the total output capability of the generator or a consideration of a proper speed for switching does not and has not solved the problem.

Firing failures, it has been found further, are due primarily, if not wholly, to lower than peak output at the critical time of initial output to the firing circuit, and with a longer output period than is effective. By taking pictures of oscilloscope readings of the current output pulses of the machines in use, it was determined that the output started from ten to forty milliseconds prior to peak output and continued well over the relatively short time interval of ten to fifteen milliseconds which has been found to be desirable for reliable firing.

The initial output in such conventional systems are thus found to be over the minimum requirements for highly sensitive caps but under that required for less sensitive ones, and results in ruptures of the series electrical circuit before excitation time has been completed on the slower caps. The resultant hazards, from unfired caps in the series, have always been a cause of injuries and worse.

It is, therefore, a still further object of the present invention, to provide an improved system for firing series-circuit blasting caps for manually-driven blasting machines, which may be adjusted in use or preset at manufacture to assure maximum electrical output during an initial ten to fifteen millisecond period and thereby provide a desired substantially 99% firing reliability for the circuit in operation under any field condition.

Thus the machine and the switching control and circuit, as parts of the system, are coordinated to ensure mechanical presetting at manufacture or resetting in the field for the most effective and safe operation of the series circuit. This assures the maximum current peak output for the initial brief period required, rather than the normal current build up and peak with sustained output for a longer period than is effective.

The invention will, however, be further understood from the following description, when considered with reference to the accompanying drawing, and its scope is pointed out in the appended claims.

In the drawing:

FIG. 1 is a schematic plan view of a system, including a manually-driven generator-type blasting machine and series cap-firing circuit, embodying the invention;

FIG. 2 is a similar schematic view, in elevation and partly in section, of the machine of FIG. 1, taken on the section line 2—2, to show a constructional and operational detail thereof in accordance with the invention;

FIGS. 3 and 4 are graphs showing oscilloscope curves illustrating an operational feature of the system of FIGS. 1 and 2, and

FIGS. 5 and 6 are schematic views, in the same elevational plane as FIG. 2, of two modifications, in accordance with the invention, of the constructional and operational detail shown therein.

Referring to the drawing and particularly to FIGS. 1 and 2, a blasting machine **8** is provided with a manual operating handle **9** detachably mounted on a rotary operating shaft **10** for the machine. The shaft is mounted in suitable bearings as indicated at **11** to rotate in the direction of the arrowed line in response to manual downward driving movement of the lever or handle **9**, as viewed in FIG. 1, and drives the shaft **12** of an electric generator **13** in the machine to produce a pulse of operating current at the machine output terminals **14** and **15**. The output current pulse may be of extended duration as measured in milliseconds and of rising, sustained and falling amplitude, as will hereinafter be described.

The driving connection between the shafts **10** and **12** is through a step-up gear train **16**, common to such machines, and comprising in the present example, a segmental or half gear **17** mounted on the drive shaft **10** and meshing with a smaller pinion gear **18**. The latter is mounted on the same shaft **19** with a larger drive gear **20** which, in turn, meshes with a smaller driven pinion gear

21 on the generator shaft 12, thereby completing the gear train.

In response to each full, manually-powered, twist or downward thrust of the key or handle 9, as is normal in the firing operation of such blasting machines, the generator shaft 12 spins through a range of speeds which includes its normal operational speed for full peak current output at the terminals 14 and 15. Stop means, such as a fixed bar 23, is provided to limit this movement of the lever and gear segment. A suitable clutch 24 is provided to connect the pinion 21 and the generator shaft 12 only on the operating stroke, whereby the handle may be returned to the starting position without turning the generator shaft, as is conventional in such machines.

The electrical current output of the blasting machine is used to activate or ignite a quantity of electrical blasting caps 27 as indicated, connected in electrical series in a firing circuit 28 extending between the output terminals 14 and 15. Each cap includes a current-responsive fuzing element 29 which heats and burns or blows to ignite the cap when the current is at a predetermined value. Some caps are more sensitive than others as explained hereinbefore. Hence the need for peak current during the initial application of firing current to the series string or circuit. More than one firing circuit of this type may be connected to the terminals 14 and 15 of the machine, as is understood. While ten caps, as a normal number, are shown in the single series circuit of the present example, more or less may be employed, depending upon the generator capacity to provide the peak current required for the brief initial time interval, which has been found to be from four to fifteen milliseconds, for safe and effective firing, with a high degree of reliability, of all caps simultaneously.

Thus, in accordance with the invention, and with reference to FIGS. 3 and 4, oscilloscope records as shown, or other indication of the output current build-up, sustained peak value, and decay, are primarily considered, rather than the generator speeds as will be considered further herein. A switch-closing device, such as a pin 32 on the segmental gear 17, is provided and adjusted in conjunction with a suitable switch or switch means 33 connected between the generator 13 and one of the output terminals 14, for example, whereby the point of firing current delivery to the caps 27 in the firing circuit 28 is timed to obtain the desired maximum or peak portion of the output response of the generator or machine during the initial four to fifteen milliseconds of the applied current.

In the circuit of the present example, and as indicated in FIG. 4, it is arranged for an effective, 1.98 amperes R.M.S. of firing current during the initial 10 milliseconds of firing current application, allowing approximately 0.2 millisecond for recording current build-up to peak after switch closure. The time of closing is adjusted by changing switch and pin relation along the path of movement of the pin.

In the present example, the switch is adjustable and comprises two spaced, substantially-parallel, flat switch blades 34 and 35, of spring metal extending at their free ends from a pivoted insulating spacer block or support means 36 into the path of movement of the pin 32 to close a pair of contacts 37 between and carried by the blades, as indicated in FIG. 2, when the pin meets and moves the upper blade 34 (as viewed in the drawing). The time of closing is adjusted by moving the blades, in the directions of the arrowed lines from the position shown, about the pivot point of the block 36 to cause an earlier or later closing of the switch for peak initial output to the firing circuit as described.

In the circuit connections for the switch, one generator output terminal 38 is connected through a lead 39 to one terminal 40 of the switch, which is on the lower blade 35 in the preesnt example. The other switch terminal 41, on the upper blade 34, is connected through a lead 42 to the main output terminal 14. The other main output

terminal 15 is connected directly with the remaining generator terminal 43 through a connection lead 44.

A micro-switch 46, as shown in FIGS. 5 and 6, may be provided in place of the switch 33 in the system of FIGS. 1 and 2. The usual depressible switch button 47 is positioned to be actuated by a suitable cam element 48 mounted on the drive shaft 10 to move with the gear segment 17 and handle 9 through the circular path indicated, over any angular range, such as the full 180 degrees indicated in FIG. 5, or the limited range indicated in FIG. 6. In the first case the cam is clamped to the shaft and moves with it over the full range, or less, as set on the shaft. In the second case, an adjustable stop screw 49, mounted in a fixed support element 50, is movable to determine the relative angular positions of the handle 9, or gear segment 17, and the cam or switch operating element 48 at the start of the operating stroke, and hence the precise time of closing of the switch 46. The switch terminals 51 are connected, in practice, with the leads 39 and 42 in the circuit of FIG. 1, and the operation is otherwise the same as for the switch 33.

Referring again to FIGS. 3 and 4, the timing of the system is such that the utmost peak output of the generator, as indicated by the oscilloscope current trace 55 in FIG. 4, is attained and applied to the firing circuit over the brief initial time interval of 4–15 milliseconds as indicated. This is compared with the conventional controlled firing current indicated by the oscilloscope trace 56 in FIG. 3, when the peak output is slow in attainment and too prolonged. Thus the initial output rises over the minimum requirements for the highly sensitive caps, one of which blows, and is under that required for the less sensitive ones for an extended time as indicated. Thus the electrical firing circuit is ruptured by one or two caps before excitation time has been completed for the slower caps. The hazard from the unfired caps is thus a serious problem in blasting work with series firing circuits as normally used.

The adjusted cam control for peak switching has solved this long-standing problem. A full firing current of over 1.5 amperes is applied to the total of ten or any number of caps in the firing circuit for a sufficient initial time interval to energize all (ten) before the most sensitive cap can rupture and break the series electrical circuit. This system gives approximately 99% reliability as desired. The constructional changes in existing equipments can be made at reasonable costs and results in a greatly safer operation for all blasting machines of this type, both for military as well as commercial applications.

It has also been shown that with the present system for firing series-circuit blasting caps, there is a sufficient output time interval, or sustained peak level output following peak output switching, to effectively fire the circuit before fall-off in the driving power of the firing stroke.

I claim:

1. A system for firing series-circuit blasting caps with a high degree of reliability, comprising in combination, an electric current generator, electrical means providing a firing circuit output connection with said generator including a pair of output terminals, normally-open switch means in said connection between the generator and one of said terminals, movable means for manually driving said generator with a limited power stroke through a varying current range having a limited sustained peak, said last-named means having an operating pin-like element affixed thereto and movable therewith in a predetermined path for effecting closure of said switch means in response to each power stroke of the generator driving means in timed relation to and during said peak in the output current range.

2. A system for firing a plurality of electric current-responsive blasting caps of differing sensitivity to firing current magnitudes and connected in electrical series relation, comprising in combination, an electric current generator having a peak current output effective to fire said

series-connected caps all at the same time, means including a movable manual operating element and a step-up gear train connecting said element and the generator for driving said generator with a limited movement of said element to provide said peak current output over a predetermined limited time interval, a normally-open switch connected in circuit with said generator to control the current output therefrom, means connected with said manual operating element and responsive to movement thereof to drive said gear train and generator for effecting closure of said switch, and means for adjusting the timing of the switch closure to fall at said current peak and within said limited time interval, thereby to apply peak initial firing current to said series connected caps in the operation of said system and provide a high degree of reliability.

3. A system for firing series-connected blasting caps of differing sensitivity to firing current magnitudes, comprising in combination, an electric current generator, electrical means providing a firing circuit output connection with said generator including a pair of output terminals, normally-open switch means in said connection between the generator and one of said terminals, movable means for manually driving said generator with a limited power stroke through a varying current range having a limited sustained peak, said last-named means having a cam element affixed thereto and movable therewith to effect closure of said switch means in response to each power stroke of the generator driving means in timed relation to and during said peak in the output current range, said timed relation being controlled by adjustable stop means adapted to establish a point of rest from which said cam element moves with said manual driving means during the limited sustained current peak, thereby insuring a high degree of reliability in the firing of series-connected blasting caps in firing circuits connected therewith.

4. A system for firing a plurality of blasting caps in a single firing circuit with a high degree of reliability, comprising in combination, an electric current generator, means providing an electrical output connection with said generator including a pair of output terminals for said firing circuit, normally-open switch means in said connection between the generator and one of said terminals, means for effecting closure of said switch means, said last named means being affixed to and carried by manually movable means for driving said generator, said last-named manually movable means being adapted to progress with a limited power stroke through a varying generated current range having a sustained peak of from 4 to 15 milliseconds duration, said sustained peak being provided to insure substantially simultaneous firing initiation of all blasting caps in said firing circuit, and thereby preventing the individual initiation of any one more sensitive cap and hence the cut off of the remainder of said caps due to the resultant opening of said circuit.

References Cited by the Examiner

UNITED STATES PATENTS

2,129,835	9/1938	Schaffler-Glossl	317—80 X
2,546,686	3/1951	Bickel et al.	317—80 X
2,618,755	11/1952	Bussey	317—80 X
2,844,747	7/1958	Schaffler-Glossl	310—69
2,902,627	9/1959	Colten	317—80

RICHARD M. WOOD, *Primary Examiner.*

V. Y. MAYEWSKY, *Assistant Examiner.*