Feb. 20, 1951 I. J. GERSHEN 2,542,077

SELF-SECURING CURTAIN HANGER

Filed Dec. 27, 1948

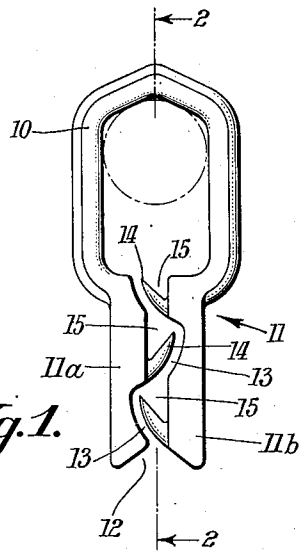

Fig. 1.

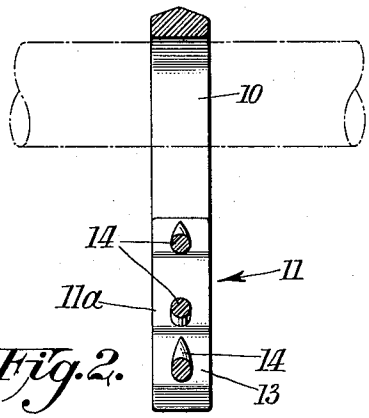

Fig. 2.

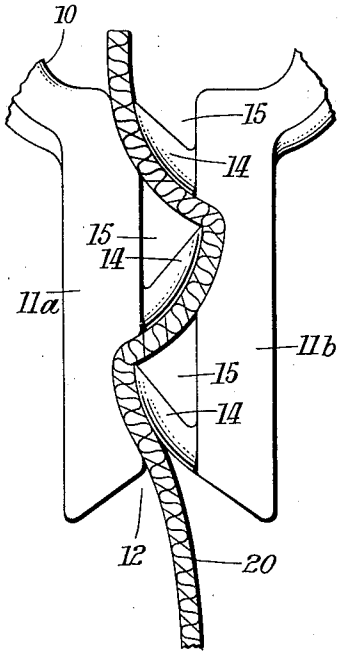

Fig. 3.

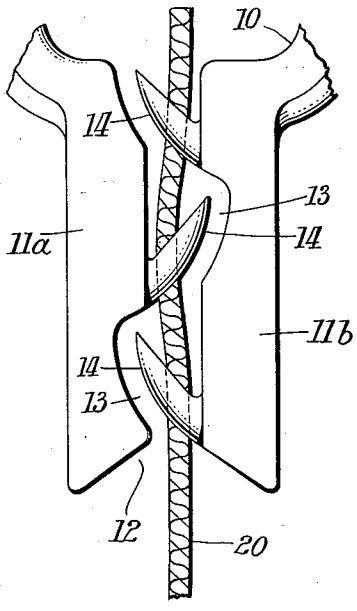

Fig. 4.

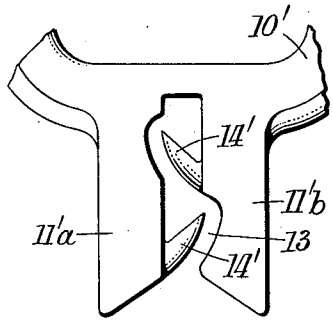

Fig. 5.

Inventor
Irvin J. Gershen
By
John Alexander
Agent

Patented Feb. 20, 1951

2,542,077

UNITED STATES PATENT OFFICE

2,542,077

SELF-SECURING CURTAIN HANGER

Irvin J. Gershen, Newark, N. J.

Application December 27, 1948, Serial No. 67,461

1 Claim. (Cl. 16—87.2)

1

This invention relates to improvements in curtain hangers, and in particular to curtain hangers of the style which may be slidably supported in multiple on a suspended rod for hanging curtains, draperies or the like.

Materials for curtains or draperies may consist of woven fabrics produced from natural or synthetic fibres although a recent trend indicates more extensive use of sheeted material in the form of plastics or paper. An elementary rod supported curtain hanger includes a ring of suitable proportions and design which may be disposed over a horizontal curtain rod. Provision is made to attach a curtain thereto, as by stitching with thread, in which case a small eyelet or hole may be located in a depending portion through which thread may be looped. This familiar style curtain hanger is generally satisfactory and may be constructed of metal or wood or plastic or of other stable and substantially rigid material.

A disadvantage of conventional curtain hangers of the type aforementioned results from the time consuming operation of stitching a curtain to the series of hangers to be used. This disadvantage is more apparent when it becomes necessary to wash or otherwise clean the curtains necessitating removal of the hangers. Accordingly, it is the principal object of my invention to provide a curtain hanger which may be quickly and easily attached to and detached from curtain material.

A further and important object of my invention is to provide a curtain hanger which may be fabricated of thermoplastic or thermosetting plastic, using known plastic molding techniques requiring a minimum of hand finishing operations to produce the final article.

In carrying out the objectives mentioned above, the hanger of my invention includes, in part, usual ring construction to slide the hanger over a curtain rod. In place of the stitching eyelet or other stitching facility, I provide a narrow, serpentine, barbed guide, the points of the barbs being directed upwardly and at an angle with the guide, to which the curtain material becomes secured upon slight downward movement of the curtain in the direction of gravity pull of the curtain in hanging position. Removal of the material from the barbs is accomplished by reversing the procedures of attachment, i. e., lifting the curtain slightly to detach the material from the barbs and subsequently sliding it outwardly from the serpentine guide.

The invention will be more completely understood by reference to the following detailed specification, taken in conjunction with the drawing.

2

In the drawing:

Figure 1 is a plan view of the curtain hanger of my invention illustrating details of construction,

Figure 2 is a vertical cross-section view taken on line 2—2 of Figure 1,

Figure 3 is an enlarged fragmentary view of the lower portion of the hanger of Figure 1, with curtain fabric drawn therein,

Figure 4 is a view similar to Figure 3 with the curtain material secured to the hanger, and

Figure 5 is an enlarged fragmentary view of a modified lower portion for the hanger.

Referring to Figures 1 and 2, my improved curtain hanger consists principally of a ring portion 10 of suitable shape adapted to slide over a curtain rod or other device, and a depending curtain supporting portion 11. The lower side of the ring 10 is split and the curtain support 11 is formed from the pair of opposed legs or protuberances 11*a* and 11*b*, each of which is integral with a side of the ring. As previously mentioned, the hanger is preferably fabricated of a stable and somewhat rigid material as a thermoplastic and the irregular contour of the inwardly disposed edges of legs 11*a* and 11*b* may be formed by molding, casting or stamping to avoid the necessity for otherwise cutting the desired shapes. It is, of course, possible to use materials other than plastics and, at the same time, to derive the benefits of casting, molding, or stamping, however, the advantages in matters of appearance, weight and cost of plastics as compared with metals make plastic materials ideally suitable to the application.

The lower ends of legs 11*a* and 11*b* are shaped to form an inverted V 12 which terminates in the lower extremity of a serpentine or reversely curved guide 13 which, in turn, extends upwardly between legs 11*a* and 11*b* to the ring opening. At each reversal of the curve of guide 13 is a curved barb 14 created by shaping the material at a sharp downward angle with respect to the guide. It will be noted by reference to Figure 2 that barbs 14 are tusk-like and smooth and, in this respect, are patterned somewhat along the lines of the point of a knitting needle, but conforming to the curvature of the guide. In back of each barb is a clearance space 15 which terminates upwardly in the guide or channel 13. Thus, in the modification of Figure 1 there are two barbs 14 on the right hand leg 11*b* and one barb 14 on the left hand leg 11*a*, the latter being situated approximately midway between the barbs on the right hand leg, the three barbs each overlapping the

vertical centerline. Due to the shape of the guide and the direction of the barbs, there is the tendency for material being drawn upwardly into the ring to avoid snagging in the barbs yet, when moved downwardly, it becomes attached thereto. The finish and width of guide **13** is such that the usual weight of curtain material may be inserted therein without meeting any appreciable resistance and without deleteriously spreading the legs **11***a* and **11***b* apart to an extent which would be sufficient to distort or fracture the material of the ring.

Figures 3 and 4 diagrammatically illustrate the application of material to the hanger, the V **12** serving to direct material **20** to the guide **13**, whereafter it may be readily drawn upwardly to the position shown in Figure 3. Upon slight downward pull, and due to the tendency of the material to straighten, it will catch in the barbs and secure itself thereto as indicated in Figure 4, the warp threads separating in the case of a woven material and the cross threads or woof restrained in the trough of the clearance cut **13**. If the curtain is of sheeted material the barbs will puncture the material and allow it to be drawn down in like manner into supporting contact with the trough of clearance cut **15**. To remove the material, it is only necessary to move it again upwardly to detach it from the barbs and to then push it out of the guide while directing it by hand away from the barbs.

It is contemplated that slight flexibility of the material of the hanger, such as is obtained with thermoplastics, will be advantageous for inserting and removing heavy or coarse material, or material with heavy hems, from the hanger. If, for example, the material is heavier than the guide width, the hanger legs will separate to accommodate the oversize during the operation of drawing it into the hanger and, likewise, the guide may be opened slightly to permit easy withdrawal, just as long as bending is not resorted to which will deform or destroy the hanger. It is further contemplated that other arrangement of the barbs may be used, depending upon the particular application at hand. It is an important feature of the invention that at least one curved section or its equivalent exist in the guide to divert material in a circuitous path and that at least one barb may be situated adjacent the path, projecting inwardly of the guide along the inside guiding surface, to snag the material when it is pulled or otherwise moved in an outwardly direction.

The construction of the hanger of my invention may also be modified as shown in Figure 5, wherein the ring portion **10'** is continuous

rather than split. As with the hanger previously described, a pair of opposed, depending legs **11'***a* and **11'***b* form the curtain securing portion between which is a modified form of serpentine guide **13'**. Two overlapping barbs **14'** conforming with the guide permit access of material therein and serve to snag the material when it is pulled slightly in the direction of withdrawal. By bridging the guide to make the ring portion continuous, additional strength is supplied to resist any tendency to deformation or breakage of the ring.

References herein to the inside guiding surface are intended to designate the surface, for example, having the shorter radius of two curved surfaces which form the guide. In the case of a reversely curved guide, the inside guiding surfaces may be situated on both legs or other opposed elements used to form the guide, depending upon the contour employed. It is to be understood that the fabric securing instrumentality which I have provided may be useful in conjunction with other than curtain rings, that the examples shown and described are preferred physical embodiments of the principles of the invention, and that various obvious changes may be made by those skilled in the art which lie within the scope of the sub-joined claim.

Having thus described my invention, I claim:

In a curtain hanger, in combination, a supporting ring portion adapted for sliding attachment to a curtain rod or the like and a depending curtain securing portion for fastening a curtain thereto, said securing portion consisting of a pair of spaced, parallel, rigid leg members each having a plurality of longitudinally spaced notches and barbs on the side thereof adjacent the other member, each barb of each member mating with a notch of the other member and extending upwardly and inwardly across the longitudinal center line of the hanger and forming a reversely curved guide in which material being drawn directly outwardly therefrom will be snagged by said barbs.

IRVIN J. GERSHEN.

REFERENCES CITED

The following references are of record in the file of this patent:

UNITED STATES PATENTS

Number	Name	Date
443,514	Gilbert	Dec. 30, 1890
635,295	Brown	Oct. 24, 1899
1,160,573	Byron	Nov. 16, 1915
1,445,037	Poelle	Feb. 13, 1923