(19) DANMARK

(10) **DK/EP 3721777 T3**

Patent- og Varemærkestyrelsen

(12) Oversættelse af europæisk patentskrift

(51) Int.Cl.: ***A 47 L 11/40 (2006.01)*** ***A 47 L 11/30 (2006.01)*** ***B 25 G 1/04 (2006.01)*** ***B 25 G 1/06 (2006.01)*** ***B 25 G 3/38 (2006.01)***

(45) Oversættelsen bekendtgjort den: **2022-01-10**

(80) Dato for Den Europæiske Patentmyndigheds bekendtgørelse om meddelelse af patentet: **2021-11-03**

(86) Europæisk ansøgning nr.: **20173141.1**

(86) Europæisk indleveringsdag: **2018-07-02**

(87) Den europæiske ansøgnings publiceringsdag: **2020-10-14**

(30) Prioritet: **2017-07-26 DE 102017212873**

(62) Stamansøgningsnr: **18181281.9**

(84) Designerede stater: **AL AT BE BG CH CY CZ DE DK EE ES FI FR GB GR HR HU IE IS IT LI LT LU LV MC MK MT NL NO PL PT RO RS SE SI SK SM TR**

(73) Patenthaver: **Hawig Maschinenfabrik Gesellschaft mit beschränkter Haftung, Schwanheimer Str. 141, 64625 Bensheim, Tyskland**

(72) Opfinder: **Franke, Rudolf, , 64625 Bensheim, Tyskland**

(74) Fuldmægtig i Danmark: **CHAS. HUDE A/S, Langebrogade 1, 2. B2, 1411 København K, Danmark**

(54) Benævnelse: **Skrubbesugemaskine**

(56) Fremdragne publikationer:
**DE-A1-102009 028 944**
**DE-C- 64 748**
**DE-U1-202013 012 528**
**GB-A- 139 510**
**US-A- 4 542 556**

## Description

**[0001]** The invention relates to a scrubbing suction machine having a base arrangement, which in a functional position can be displaced over a surface to be treated, and having a guide part which is articulated on the base arrangement and is intended for controlling the base arrangement manually.

**[0002]** A surface-treatment appliance is generally well-known in the field of floor cleaning and floor maintenance apparatus from DE 10 2009 028944 A1. The known surface-treatment appliance is a scrubbing suction machine which is intended for the wet cleaning of floor surfaces. The scrubbing suction machine has a guide part with at least one handle. The guide part is articulated on a base arrangement which can be displaced on a floor surface to be treated in a functional position of the scrubbing suction machine. The base arrangement has at least one tool which can be rotated by means of a drive and a suction-strip arrangement assigned to the tool. For manual control of the base arrangement, the guide part can be grasped by hand and moved by an operator.

**[0003]** The object of the invention is to create a scrubbing suction machine of the type mentioned in the introduction which provides for improved handling capability in relation to the prior art.

**[0004]** This object is achieved in that, on the base arrangement, an arcuate guide is provided, on which a carriage body, which is connected to the guide part, can be displaced in a linear manner, which carriage body is supported on the arcuate guide, at least in the radial direction, by means of at least two supporting points which are spaced apart from one another along the arcuate guide. Providing the arcuate guide and the carriage body, which can be displaced linearly on the arcuate guide, achieves improved movement capability of the guide part in relation to the base arrangement. In particular, it is possible for the guide part thus to be pivoted over a wide range of angle in relation to the base arrangement and thus to be pivoted straightforwardly, for example, out of an operating region. In this manner, particularly straightforward and precise handling capability is achieved. Accordingly, surface regions which are otherwise difficult to reach can be accessed more easily and cleaned to better effect. In addition, support for the carriage body, at least in the radial direction, by means of at least two supporting points which are spaced apart from one another along the arcuate guide provides for an improved introduction of forces and/or moments from the guide part into the base arrangement. As a result of such radial support, it is possible in particular for a moment which acts transversely to the radial direction and which an operator can apply to the guide part by means of manual force, as it were a force couple, to be introduced into the base arrangement. In this manner, a positioning force acting between the base arrangement and the surface which is to be treated can be influenced easily and precisely, should this be so desired by the operator. Accordingly, it is, for example, possible for individual regions of the base arrangement to be subjected to loading and/or relieved of loading in a specific manner in relation to the

surface which is to be treated, and this can improve, on the one hand, the treatment result achievable and, on the other hand, the manual control capability of the base arrangement. In contrast, it has additionally been found that an undesirable introduction of forces and/or moments which can otherwise be applied to the base arrangements, for example, by pulling or pushing on the guide part, for example in the form of a pitching moment, is advantageously reduced by the solution according to the invention. To that extent, the solution according to the invention can reduce the amount by which forces acting on the guide part influence the base arrangement in an undesirable manner. The base arrangement can advantageously have at least one drive, a tool which can be rotated by means of the drive and/or also a suction-strip arrangement. The guide part can advantageously be designed in the form of a handle, of a push-bar, of a shaft or the like. The arcuate guide can advantageously form a portion of the base arrangement, and therefore, for example, further components of the base arrangement, in particular a tool or a drive, can be arranged directly on the arcuate guide. As seen in relation to the vertical direction, the arcuate guide advantageously projects upward in relation to a base surface area of the base arrangement, at least part of said base surface area in the functional position being arranged opposite the surface which is to be treated. The arcuate guide can have, in particular, a rectangular, a round or an oval cross section and be produced, for example, from a flat material or a round material. The carriage body can be supported, in particular with slide-bearing and/or rolling-bearing action, on the arcuate guide by means of the supporting points. The term “supporting points” here, within the context of the invention, covers support at a point, along a line and/or over a surface area. Within the context of the invention, “along the arcuate guide” means in the direction of the main extent of the arcuate guide and, to that extent, in the direction of an arcuately curved guide path which is formed by means of the arcuate guide and on which the carriage body can be moved in a linear manner. In addition, the directional information “radial(ly)” relates to the arcuate shape or the radius of the arcuate guide. Further directional information such as longitudinal direction, transverse direction or vertical direction relate to a coordinate system of the scrubbing suction machine, which in the functional position is arranged on a planar horizontal surface.

**[0005]** In a configuration of the invention, the arcuate guide is curved continuously and in the same direction. This achieves functionally effective and straightforward displacement capability of the carriage body on the arcuate guide. As seen in a transversely oriented direction, the arcuate guide is advantageously curved convexly. As a result, it is advantageously possible for an apex of the arcuate guide to be arranged in an upper region of the arcuate guide.

**[0006]** In a further configuration of the invention, the arcuate guide is made to extend in the form of a circular arc over an angle of at least largely 90°. Such an angular extent can provide for sufficient movement capability of the guide part in relation to the base arrangement, the overall volume at the same time being small. The arcuate guide can preferably be made to extend in the form of a circular arc over an angle of at least largely 120°. Such an angular extent can provide for even better movement capability of the guide part in relation to the base arrangement, the overall volume at the same time being moderate. The arcuate guide can

particularly preferably be made to extend in the form of a circular arc over an angle of at least largely 180°. Such an angular extent can provide for more or less optimum movement capability of the guide part in relation to the base arrangement. For example, the guide part can advantageously be pivoted easily from one side of the base arrangement to an opposite side, without the base arrangement having to be repositioned for this purpose. In this manner the guide part can be swung down on either side essentially flat and, to that extent, parallel to the surface which is to be treated. As a result, the base arrangement can be maneuvered, for example, straightforwardly beneath an obstacle or the like.

**[0007]** In a further configuration of the invention, the arcuate guide is made to extend over the base arrangement. The arcuate guide can advantageously be connected at each end to a front portion and a rear portion of the base arrangement, the arcuate guide therefore extending essentially over a longitudinal extent of the base arrangement.

**[0008]** In a further configuration of the invention, the arcuate guide is mounted on the base arrangement such that it can be pivoted about a pivot axis, which is located at least largely in a guide plane of the arcuate guide. “Guide plane” here means an imaginary plane which is defined by end points of the arcuate guide and a point on the arcuate guide which is arranged between said end points. In other words, the pivot axis can advantageously be oriented coaxially in relation to, or parallel to, an axis which connects the end points of the arcuate guide. This achieves even better manual handling capability of the scrubbing suction machine. In particular, it is thus possible for the base arrangement to be rotated on the spot while, at the same time, the guide part is positioned obliquely in relation to the base arrangement, i.e. has been swung down out of the vertical direction. This is because the arcuate guide, together with the carriage body and the pivot axis, forms, as it were, a kind of universal-joint arrangement. It is thus possible for the base arrangement, essentially irrespective of the angular position of the guide part in relation to the base arrangement, to be rotated on the spot, on the surface which is to be treated, by means of a torque acting on the guide part.

**[0009]** In a further configuration of the invention, the pivot axis is made to extend essentially parallel to a base surface area of the base arrangement. In particular, it is additionally possible for the pivot axis to be arranged directly above the base arrangement. The base surface area of the base arrangement should be understood to mean that surface area which, in the functional position, is at least in part arranged opposite to the surface which is to be treated and, to that extent, is oriented essentially parallel to said surface. Such a parallel extent of the pivot axis can provide for on-the-spot rotation of the base arrangement even when the angular position of the guide part in relation to the base arrangement is flat, in particular almost horizontal. If the pivot axis is arranged directly above the base arrangement, i.e. at a small distance from the surface which is to be treated, it is possible to achieve a low-level point of action of the forces which can be transmitted between the guide part and the base arrangement. This configuration of the invention can further reduce the amount by which the base arrangement is influenced in an

undesirable manner by moments applied by the guide part. In particular, an undesirable pitching moment can be reduced in this way.

**[0010]** In a further configuration of the invention, the carriage body has at least one supporting element, in particular in the form of a sliding or rolling element, which is supported on the arcuate guide in the radial direction and forms at least a first one of the supporting points. It is possible for the supporting element to be supported on the arcuate guide at a point, along a line and/or over a surface area and, to that extent, to form the first one of the supporting points. The sliding element can be designed in the form of a sliding shoe, of a sliding block or the like. The rolling element can be designed in the form of a ball-shaped, roller-shaped, needle-shaped or barrel-shaped rolling body. To that extent, the arcuate guide can have a guide portion which is designed to complement the shape of the supporting element, and is for example in the form of a correspondingly complementary guide path, for interacting with such a sliding or rolling element. This provides for low-friction movement of the carriage body on the arcuate guide. It is particularly advantageous that a plurality of supporting elements are arranged along the arcuate guide.

**[0011]** In a further configuration of the invention, the carriage body has at least one counter-support element, in particular in the form of a sliding counter-support element or rolling counter-support element, which is supported on the arcuate guide from the opposite side in relation to the supporting element, as seen in the radial direction, and forms at least a second one of the supporting points. It is thus possible for the carriage body to be supported on the arcuate guide on either side, as seen in the radial direction, or in other words: in the radially inward direction and radially outward direction, by means of the supporting element and of the counter-support element. In this manner a force couple can be introduced into the arcuate guide, low-friction movement of the carriage body being achieved at the same time. It is possible for the counter-support element to be supported on the arcuate guide at a point, along a line and/or over a surface area and, to that extent, to form the second one of the supporting points. The sliding counter-support element can be designed, in particular, in the form of a sliding shoe, of a sliding block or the like. The rolling counter-support element can be designed, in particular, in the form of a ball-shaped, roller-shaped, needle-shaped or barrel-shaped rolling body. To that extent, the arcuate guide can have a counter-guidance portion which is designed to complement the shape of the counter-support element, and is for example in the form of a correspondingly complementary counter-guidance path, for interacting with such a sliding counter-support element or rolling counter-support element. This provides for particularly low-friction movement of the carriage body on the arcuate guide. It is particularly advantageous if a plurality of counter-support elements are arranged one behind the other along the arcuate guide.

**[0012]** In a further configuration of the invention, the carriage body is supported on the arcuate guide in the lateral direction such that a torque acting about a longitudinal axis of the guide part can be transmitted to the arcuate guide, and therefore to the base arrangement, via the carriage

body. “In the lateral direction” means oriented essentially transversely to the arcuate guide and, to that extent, essentially perpendicularly to the radial direction of the arcuate guide. The carriage body can advantageously be supported thus in the lateral direction by means of at least one sliding or rolling element. It is thus possible to achieve low-friction movement of the carriage body during on-the-spot rotation of the base arrangement and therefore even better handling of the scrubbing suction machine.

**[0013]** In a further configuration of the invention, the arcuate guide has a round cross section and the carriage body engages around the cross section, at least in part, in particular by means of at least one bearing sleeve. The arcuate guide is produced preferably from a round material and can have, for example, a tubular hollow cross section or a cylindrical solid cross section. The carriage body engages around the cross section of the arcuate guide in the manner of a sleeve. For this purpose, the carriage body can have at least one bearing sleeve. The bearing sleeve can be made to extend longitudinally over essentially the entire length of the carriage body, and this therefore achieves full-surface-area bearing along the cross section of the arcuate guide. As an alternative, it is possible to provide a plurality of bearing sleeves, for example two bearing sleeves, and to arrange these at opposite ends of the carriage body. In this case, along the arcuate guide, bearing of the carriage body merely along certain regions on the cross section of the arcuate guide is achieved. The bearing sleeve can be configured, for example, in the form of a sliding sleeve. Of course, it is also possible for the at least one bearing sleeve to be configured as a basically known linear ball bearing in the form of a ball sleeve, which can also be referred to as a shaft guide, and this provides for the carriage body to be guided with rolling-bearing action on the round cross section of the arcuate guide.

**[0014]** Further advantages and features of the invention can be gathered from the claims and from the following description of preferred exemplary embodiments of the invention, which are illustrated with reference to the drawings, in which:

figure 1 shows a schematic side view of a first embodiment of a scrubbing suction machine according to the invention having a base arrangement, an arcuate guide, a carriage body and a guide part,

figure 2 shows a schematic side view of a further embodiment of a scrubbing suction machine according to the invention, wherein the arcuate guide is mounted on the base arrangement such that it can be pivoted about a pivot axis,

figures 2a and b each show a schematic plan view of the scrubbing suction machine according to figure 2 in a first position (figure 2a) and a second position (figure 2b), which is shifted in relation to the first position,

figure 3 shows a schematic side view of a further embodiment of a scrubbing suction machine according to the invention, wherein the guide part is connected to the carriage body by means of a joint element,

figures 4a and b show, in a schematic plan view (figure 4a) and a sectional view (figure 4b) taken along a section line A-A according to figure 4a, a carriage body and a region of an arcuate guide in a first embodiment for a scrubbing suction machine according to figures 1 to 3,

figures 5a and b show, in a schematic plan view (figure 5a) and a sectional view (figure 5b) taken along a section line B-B according to figure 5a, a carriage body and a region of an arcuate guide in a further embodiment for a scrubbing suction machine according to figures 1 to 3, and

figures 6a and b show, in a schematic sectional view (figure 6a) corresponding to the view according to figures 4b and 5b and a cross section (figure 6b) taken along a section line C-C according to figure 6a, a carriage body and a region of an arcuate guide in a further embodiment for a scrubbing suction machine according to figures 1 to 3.

**[0015]** The scrubbing suction machines 1, 1a and 1b according to the invention are each provided for cleaning floor surfaces.

**[0016]** As far as the structural and functional features are concerned, the embodiments of scrubbing suction machines 1, 1a and 1b according to the invention are constructed in an essentially corresponding manner. To that extent, components and portions which are identical for the scrubbing suction machines 1 to 1b are provided with identical reference signs. In order to avoid repetition, such identical components and portions are not explained separately for each of the embodiments. Functionally identical components and portions which, however, differ in their structural design have been designated by identical reference-sign numbers with lower-case letters added.

**[0017]** As can be seen with reference to figure 1, the scrubbing suction machine 1 has a base arrangement 2 and a guide part 3, which is articulated on the base arrangement 2. In a functional position which can be seen with reference to figure 1, the base arrangement 2 can be displaced on a surface 4 which is to be treated. The base arrangement 2 has a surface-treatment tool 6, which can be driven by means of a drive 5 and is in the form of a floor-scrubbing roller. In order to transmit driving forces, the drive 5 is connected to the surface-treatment tool 6 via a force-transmission element 7 in the form of a belt drive. The drive 5 is secured on the base arrangement 2 in a manner which will not be described in any more detail, but is known. The surface-treatment tool 6 is connected to the base arrangement 2 by means of a longitudinally extending connecting element 8. Further, the base arrangement 2 has a suction-strip arrangement 9, which is assigned to the surface-treatment tool 6. The suction-strip arrangement 9 can be provided in order to suction up dirty water which arises during the wet cleaning of the floor surface 4. Furthermore, the base arrangement 2 has an end wheel 10 which, in the functional position, is supported on the surface 4 which is to be treated. It is furthermore readily clear to a person skilled in the art here that, instead of the aforementioned parts and components, it is possible for the base arrangement to be provided as an alternative,

or in addition, with further parts or components adapted to the respective treatment purpose. For example, instead of the roller-like surface-treatment tool 6 which has its circumference positioned against the surface 4 which is to be treated, the base arrangement 2 can have a plate-like surface-treatment tool, which can have its end surface positioned against the surface 4 which is to be treated.

**[0018]** The guide part 3 is configured in the form of a longitudinally extending shaft and is provided for controlling the base arrangement 2 manually. For this purpose, at its end region which cannot be seen specifically, and is directed away from the base arrangement 2, the guide part 3 has at least one grip in order for the scrubbing suction machine 1 to be guided manually by an operator. To that extent, the base arrangement 2 can be displaced and positioned on the surface 4 which is to be treated by virtue of the operator introducing corresponding forces and/or moments via the guide part 3.

**[0019]** As can further be seen with reference to figure 1, an arcuate guide 11 is provided on the base arrangement 2. On said arcuate guide 11, a carriage body 12, which is connected to the guide part 3, can be displaced linearly along a schematically indicated guide direction 13 of the arcuate guide 11 in linear displacement. The carriage body 12 is supported on the arcuate guide 11 at least in the radial direction R by means of at least two supporting points P1, P2 which are spaced apart from one another along the arcuate guide 11. As a result of this linear displacement capability of the carriage body 12 along the arcuate guide 11, the guide part 3 can be shifted in an arcuate manner out of the angular position in relation to the base arrangement 2 which can be seen with reference to figure 1, for example, into an angular position W1 and/or an angular position W2, both indicated by dashed lines in the illustration of figure 1, and any desired number of intermediate positions. In order to achieve such linear displacement capability of the carriage body 12, the latter is supported with slide-bearing and/or rolling-bearing action on the arcuate guide 11 in a manner which is yet to be explained in more detail and can be seen, in particular, with reference to figures 4a to 5b.

**[0020]** As can further be seen with reference to figure 1, the arcuate guide 11 is curved continuously and in the same direction and, to that extent, is made to extend in the form of a circular arc over an angle of at least largely 180°. Quite apart from this, sufficient angular movement capability of the guide part 3 in relation to the base arrangement 2 can be achieved even when the arcuate guide 11 is made to extend over an angle of at least largely 120° or of at least largely 90°.

**[0021]** Further, the arcuate guide 11 is secured at each of its end regions on the face of a front region 15 of the base arrangement 2 and of a rear region 16 of the base arrangement 2, respectively. To that extent, the arcuate guide 11 is made to extend over the base arrangement 2, in particular over the length thereof. An apex 17 of the arcuate guide 11 here is arranged, essentially as seen in relation to a longitudinal direction L, centrally between the front region 15 and the rear region 16 of the base arrangement 2.

**[0022]** With reference to figure 2, a further embodiment of the scrubbing suction machine 1a is shown that, as far as its structural design and functional configuration are concerned, corresponds essentially with the scrubbing suction machine 1 according to figure 1. In order to avoid repetition, merely the differences of the scrubbing suction machine 1a in relation to the scrubbing suction machine 1 will be discussed hereinbelow.

**[0023]** To that extent, the scrubbing suction machine 1a differs essentially in that the arcuate guide 11a is mounted on the base arrangement 2a such that it can be pivoted about a pivot axis 18. The pivot axis 18 is located at least largely in a guide plane F of the arcuate guide 11a, said guide plane being defined by three imaginary points, for example front and rear end points and the apex 17, arranged along the arcuate guide 11a. For this purpose, the arcuate guide 11a is connected in a pivotable manner to the further components of the base arrangement 2a via a front articulated joint 19a and a rear articulated joint 19b. This gives rise to pivoting capability of the arcuate guide 11a, said pivoting capability being oriented transversely to the linear displacement capability of the carriage body 12 along the arcuate guide 11a. In this way, the arcuate guide 11a, together with the carriage body 12 and the pivot axis 18 and/or the front and rear articulated joints 19a and 19b, forms a kind of universal-joint arrangement. This kind of joint arrangement provides for on-the-spot rotation of the base arrangement 2a, by means of a torque D applied to the guide part 3, essentially irrespective of the angular position of the guide part 3 in each case. If the torque D is applied to the guide part 3, for example, with reference to the direction of rotation indicated in figure 2, this gives rise to planar rotation of the base arrangement 2a about a vertical axis H in a manner corresponding to a direction of rotation U which can be seen with reference to figure 2. Such kinematics of the scrubbing suction machine 1a are depicted in more detail with reference to figures 2a and 2b. In a first position, which can be seen with reference to figure 2a, the base arrangement 2a is arranged in an essentially centered state above an imaginary point P of the surface 4 which is to be treated. The pivot axis 18 here is oriented horizontally in relation to the surface 4 which is to be treated and – as seen in relation to the drawing plane of figures 2a and b – vertically. In respect of the imaginary vertical axis H (figure 2), the arcuate guide 11a has been pivoted to the right, as seen in relation to the drawing plane, and thus assumes an angular position of approximately 45° in relation to the surface 4 which is to be treated. The carriage body 12 is positioned on the arcuate guide 11a in the region of the rear articulated joint 19b, wherein the guide part projects obliquely upward in relation to the surface 4 which is to be treated and – as seen in relation to the drawing plane of figures 2a and b – downward to the right. Proceeding from the first position, which can be seen with reference to figure 2a, the introduction of a torque D' acting about the longitudinal axis of the guide part 3 causes the base arrangement 2a to rotate in the counterclockwise direction or counter to the direction of rotation U which can be seen with reference to figure 2. During this rotation, the guide part 3 remains in an essentially unaltered position in relation to the surface 4 and rotates through approximately 90° about its longitudinal axis. On account of the essentially unaltered position of the guide part 3, and of the above described rotation of the base arrangement 2a, the torque D' causes the guide part 3, and the carriage body 12 arranged on the guide part 3, to move relative to the base arrangement 2a and

the arcuate guide 11a. During this relative movement, the carriage body 12 makes its way along the arcuate guide 11a. The arcuate guide 11a, in contrast, is tilted in relation to the base arrangement through approximately 90° about the pivot axis 18. Of course, it is also possible for the base arrangement 2 to rotate on the spot through more than the 90° which can be seen with reference to figures 2a and b.

**[0024]** Moreover, the pivot axis 18 is made to extend essentially parallel to the surface 4 which is to be treated. It is, of course, also possible for the pivot axis 18 to be arranged in an inclined state in relation to the surface 4 which is to be treated.

**[0025]** The scrubbing suction machine 1b, which can be seen with reference to figure 3, differs from the scrubbing suction machines 1 and 1a according to figures 1 and 2, respectively, essentially in that the guide part 3b is connected to the carriage body 12 by means of a joint element 20. The joint element 20 has a joint axis 21. The joint axis 21 is oriented essentially parallel to the guide plane F of the arcuate guide 11, in which the carriage body 12 can be displaced linearly. The joint element 20 is designed in the form of an articulated joint, and therefore, as seen in relation to the drawing plane of figure 3, the guide part 3b can be pivoted out of said drawing plane and into the same. In this way, the arcuate guide 11, together with the carriage body 12 and the joint element 20, forms, as it were, a kind of universal-joint arrangement. Regardless of the differences in structural design in relation to the joint arrangement of the scrubbing suction machine 1a according to figure 2, this joint arrangement here has essentially a corresponding functionality in terms of kinematics. To that extent, the base arrangement 2 of the scrubbing suction machine 1b can thus be rotated on the spot in the same manner as the base arrangement 2a of the scrubbing suction machine 1a.

**[0026]** With reference to figures 4a to 6b, further details relating to the structural design configuration providing for the support and linear displacement capability of the carriage body 12 on the arcuate guide 11 are shown.

**[0027]** A first configuration which provides for this support can be seen with reference to figures 4a and 4b. To give a clearer representation, the carriage body 12a here is indicated merely by dashed lines. The carriage body 12a has a supporting element 22a supported on the arcuate guide 11a in the radial direction R. The supporting element 22a is designed in the form of a rolling element 23. The rolling element 23 is barrel-shaped and is supported in the radial direction R against an inner guide path 24 of the arcuate guide 11a, as seen in relation to the radial direction R. In this way, the supporting element 22a forms the supporting point P1 of the carriage body 12a. Instead of the barrel-shaped configuration of the rolling element 23, it is also possible, of course, to provide a ball-shaped, cone-shaped, needle-shaped or similar configuration. Further, the carriage body 12a has a counter-support element 25a supported on the arcuate guide 11a from the opposite side in relation to the supporting element 22a, as seen in the radial direction R. The counter-support element 25a is configured, in a manner corresponding to the supporting element 22a, in the form of a rolling element 23 and is

supported on an outer guide surface 26 of the arcuate guide 11a, as seen in relation to the radial direction R. To that extent, the counter-support element 25a forms a second one of the supporting points P1, P2, namely the supporting point P2.

**[0028]** In particular in order to achieve play-free and essentially direction-independent support of the carriage body 12a, the latter has further rolling elements 23, each supported along the radial direction R on those regions of the arcuate guide 11a which are directed away from the supporting element 22a and the counter-support element 25a. To that extent, these two rolling elements 23 form a further supporting element 27a and a further counter-support element 28a.

**[0029]** In addition, the carriage body 12a is supported on the arcuate guide 11a in the lateral direction L, i.e. in a direction transverse to a main extent of the arcuate guide, such that a torque D (figure 2) acting about a longitudinal axis of the guide part 3, 3b can be transmitted to the arcuate guide 11a, and therefore to the base arrangement 2, 2a, via the carriage body 12a. For this purpose, the carriage body 12a has a plurality of guide elements 29a arranged one behind the other along the arcuate guide 11a. The guide elements 29a are supported on opposite outer surfaces of the arcuate guide 11a along the lateral direction L and are each designed in the form of a barrel-shaped rolling element.

**[0030]** A further structural design for the linear displacement capability of the carriage body 12 on the arcuate guide 11 can be seen with reference to figures 5a and 5b. The configuration illustrated there differs from the configuration which can be seen with reference to figures 4a and 4b essentially in that the supporting elements 22b, 27b and the counter-support elements 25b, 28b are designed in the form of sliding elements 30. Accordingly, it is also the case that the guide elements 29b for supporting the carriage body 12b laterally on the arcuate guide 11b are designed in the form of sliding elements.

**[0031]** A further structural design configuration for the linear displacement capability of the carriage body 12 on the arcuate guide 11 can be seen with reference to figures 6a and 6b. The configuration illustrated there differs from the embodiments according to figures 4a and 4b, and also figures 5a and 5b, essentially in that there is an arcuate guide 11c provided, which has a round cross section. The arcuate guide 11c here is produced from a round material of solid cross section. Of course, it is also possible for a tubular hollow cross section to be provided instead for the arcuate guide 11c. The arcuate guide 11c has a carriage body 12c engaging around it in the circumferential direction. As is depicted with reference to figure 6a, a lower portion of the carriage body 12c, as seen in relation to the drawing plane of figure 6a, can be taken to be a supporting element 22c. Accordingly, an upper portion 25c of the carriage body 12c can be taken to be a counter-support element 25c, which is supported on the arcuate guide 11c from the opposite side in relation to the supporting element 22c, as seen in the radial direction. As can be seen with reference to the cross-sectional illustration of figure 6b, the carriage body 12c has a bearing sleeve 31. The bearing sleeve 31 engages all the way around the circular-cylindrical cross section of the arcuate guide 11c in the circumferential direction.

Instead of such a complete engagement all the way around, it is possible to provide, for example, engagement only part of the way around. This latter feature is the case, for example, when the bearing sleeve 31 is slitted or is subdivided into sub-elements, which is intended to be depicted in figure 6b by means of the schematically indicated parting plane S. The bearing sleeve 31 extends continuously along the arcuate guide 11c and essentially over the entire length of the carriage body 12c. It is also possible, instead, to provide two bearing sleeves which are considerably shorter as compared to the bearing sleeve 31, in which case the bearing sleeves are arranged opposite one another at the face ends of the carriage body 12c. The bearing sleeve 31 here is provided in the form of a separate machine element, which is connected to the rest of the components of the carriage body 12c. As an alternative, the bearing sleeve 31 can be formed in one piece with the carriage body 12c. The carriage body 12c can be displaced with slide-bearing action along the arcuate guide 11c by means of the bearing sleeve 31. To that extent, the bearing sleeve 31 is designed in the form of a sliding sleeve. It is also possible, instead, for the bearing sleeve 31 to be configured in the form of a linear ball bearing, which is known in principle, and this makes it possible for the carriage body 12c to be displaced with rolling-bearing action on the arcuate guide 11c.

**[0032]** The above described configurations of the support of the carriage bodies 12a, 12b and 12c on the respective arcuate guide 11a, 11b and 11c can, of course, be provided on the scrubbing suction machine 1, 1a and 1b irrespective of the embodiment of the latter in each case.

## PATENTKRAV

1. Skrubbesugemaskine (fladebearbejdningsapparat) (1, 1a, 1b) med en basisanordning (2, 2a), som i en funktionsstilling kan bevæge sig på en flade (4), der skal bearbejdes, såvel som med en føringsdel (3, 3b), der er ledforbundet til basisanordningen (2, 2a), med henblik på manuel styring af basisanordningen (2, 2a),
**kendetegnet ved, at** der på basisanordningen (2, 2a) er tilvejebragt en kurveføring (11, 11a, 11b, 11c), på hvilken der lineært bevægeligt kan bevæges et med føringsdelen (3, 3b) forbundet slædelegeme (12, 12a, 12b, 12c), som ved hjælp af mindst to, langs kurveføringen (11, 11a, 11b 11c) i en indbyrdes afstand holdte, støttepunkter (P1, P2) i det mindste i radial retning (R) er understøttet på kurveføringen (11, 11a, 11b).

2. Skrubbesugemaskine (1, 1a, 1b) ifølge krav 1, **kendetegnet ved, at** kurveføringen (11, 11a, 11b, 11c) kontinuerligt er krummet og rettet i samme retning.

3. Skrubbesugemaskine (1, 1a, 1b) ifølge krav 1 eller 2, **kendetegnet ved, at** kurveføringen (11, 11a, 11b, 11c) strækker sig cirkelbueformet over en vinkel på mindst i det væsentlige 90°, fortrinsvis over en vinkel på mindst i det væsentlige 120° og især foretrukket over en vinkel på mindst i det væsentlige 180°.

4. Skrubbesugemaskine (1, 1a, 1b) ifølge et af de foregående krav, **kendetegnet ved, at** kurveføringen (11, 11a, 11b, 11c) strækker sig over basisanordningen (2, 2a).

5. Skrubbesugemaskine (1a) ifølge et af de foregående krav, **kendetegnet ved, at** kurveføringen (11, 11a, 11b, 11c) er lejret svingbevægeligt omkring en svingakse (18) på basisanordningen (2a), og som i det mindste stort set ligger i et føringsplan (F) for kurveføringen (11, 11a, 11b, 11c).

6. Skrubbesugemaskine (1a) ifølge krav 5, **kendetegnet ved, at** svingaksen (18) i det væsentlige strækker sig parallelt med en grundflade for basisanordningen (2a), og navnlig er arrangeret direkte oven over basisanordningen.

7. Skrubbesugemaskine (1, 1a, 1b) ifølge et af de foregående krav, **kendetegnet ved, at** slædelegemet (12, 12a, 12b, 12c) i det mindste omfatter et i radial retning (R) på kurveføringen (11, 11a, 11b, 11c) understøttet støtteelement (22a, 27a, 22b, 27b, 22c), navnlig i form af et glide- (30) eller rulleelement (23), som i det mindste danner et første af støttepunkterne (P1, P2).

8. Skrubbesugemaskine (1, 1a, 1b) ifølge krav 7, **kendetegnet ved, at** slædelegemet (12, 12a, 12b, 12c) i det mindste omfatter et kontrastøtteelement (25a, 28a, 25b, 28b, 25c), navnlig i form af et glidende kontra-element (30) eller rullende kontra-element (23), som understøttes på kurveføringen (11, 11a, 11b, 11c) fra den modstående side i forhold til støtteelementet (22a, 27a, 22b, 27b, 22c) i radial retning (R) og danner mindst et andet af støttepunkterne (P1, P2).

9. Skrubbesugemaskine (1, 1a, 1b) ifølge et af de foregående krav, **kendetegnet ved, at** slædelegemet (12, 12a, 12b, 12c) på en sådan måde er understøttet i lateral retning (L) på kurveføringen (11, 11a, 11c), at et drejningsmoment (D), der virker omkring en længdeakse for føringsdelen (3, 3b), via slædelegemet (12, 12a, 12b, 12c) kan overføres til kurveføringen (11, 11a, 11b, 11c) og således til basisanordningen (2, 2a).

10. Skrubbesugemaskine (1, 1a, 1b) ifølge et af de foregående krav, **kendetegnet ved, at** kurveføringen (11c) omfatter et rundt tværsnit, og slædelegemet (12c) griber rundt om tværsnittet, i det mindste afsnitsvist, navnlig ved hjælp af mindst en lejemuffe (31).

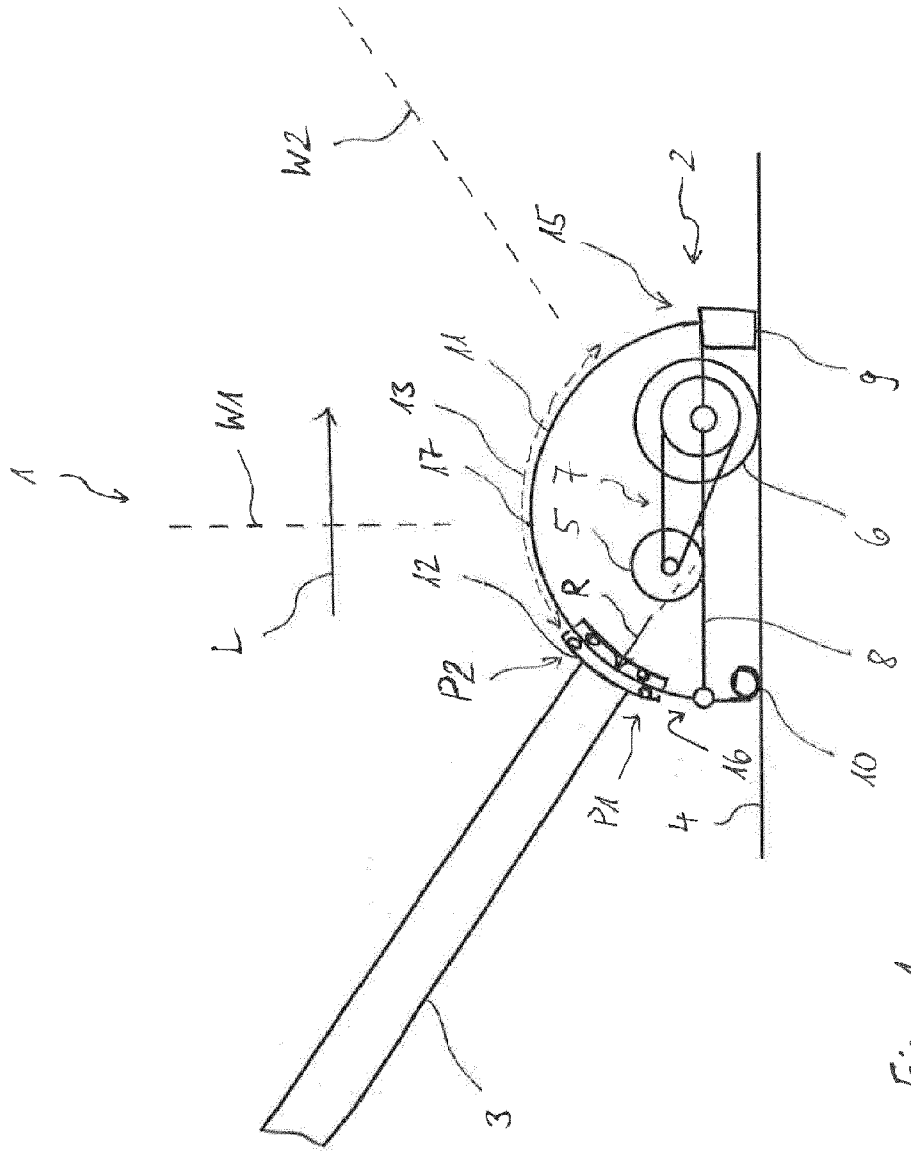


Fig. 1

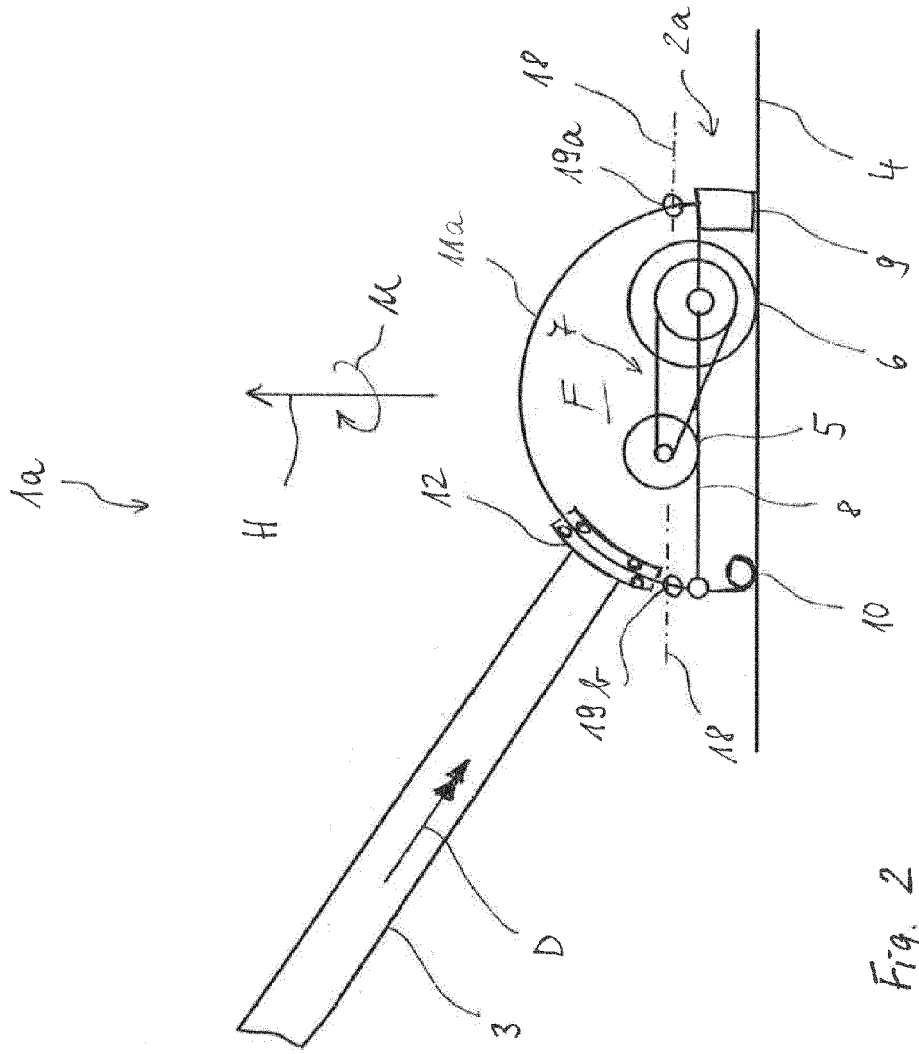


Fig. 2

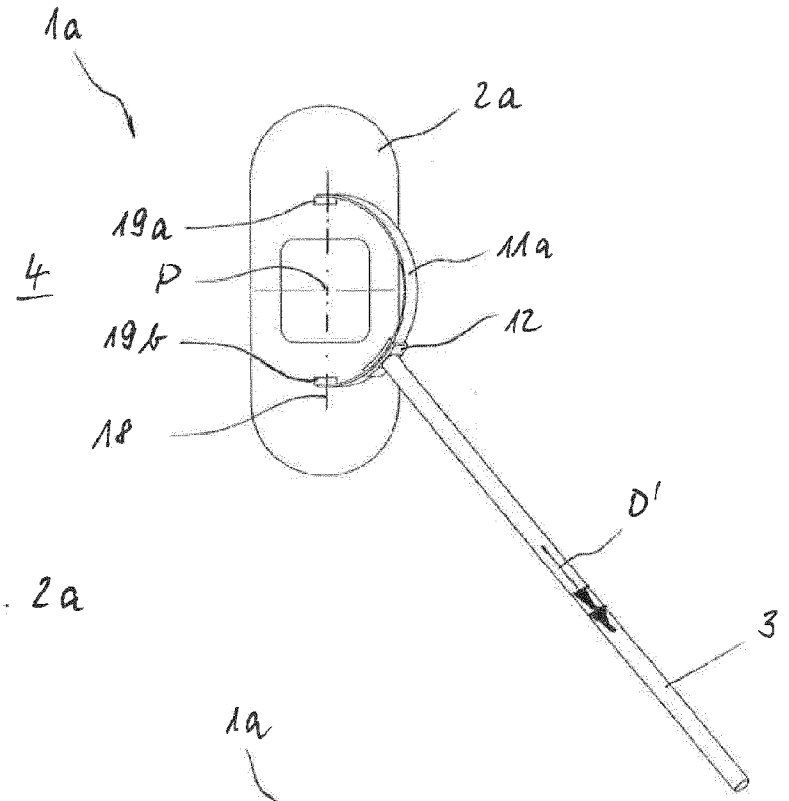


Fig. 2a

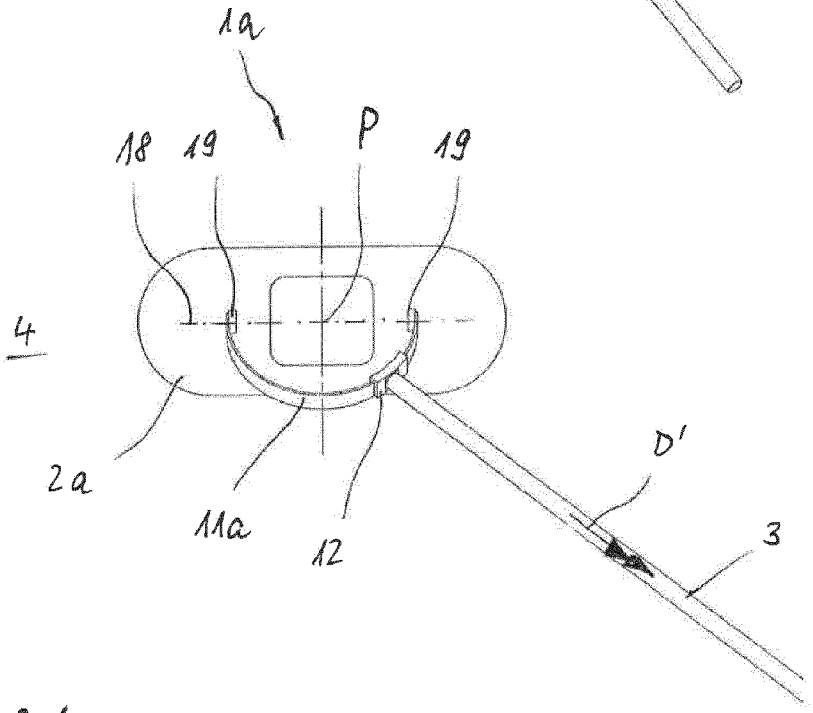


Fig. 2b

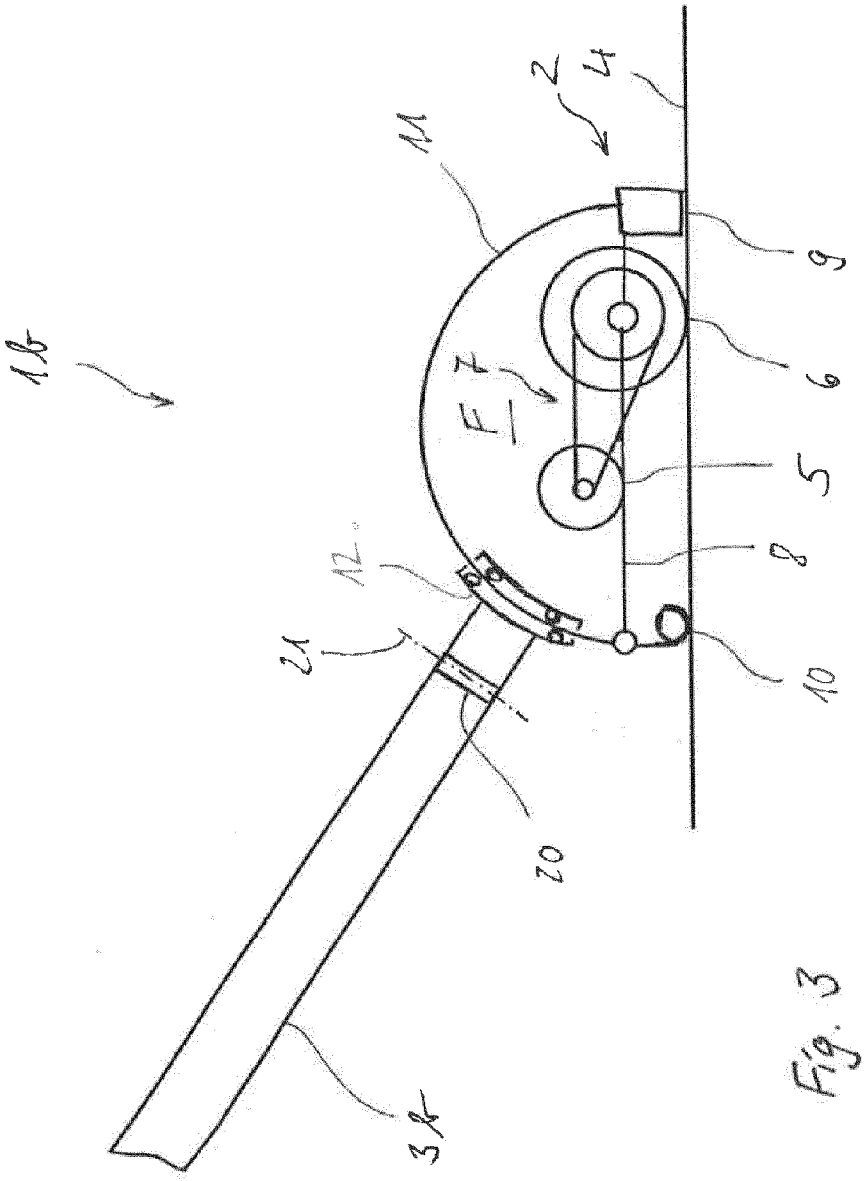


Fig. 3

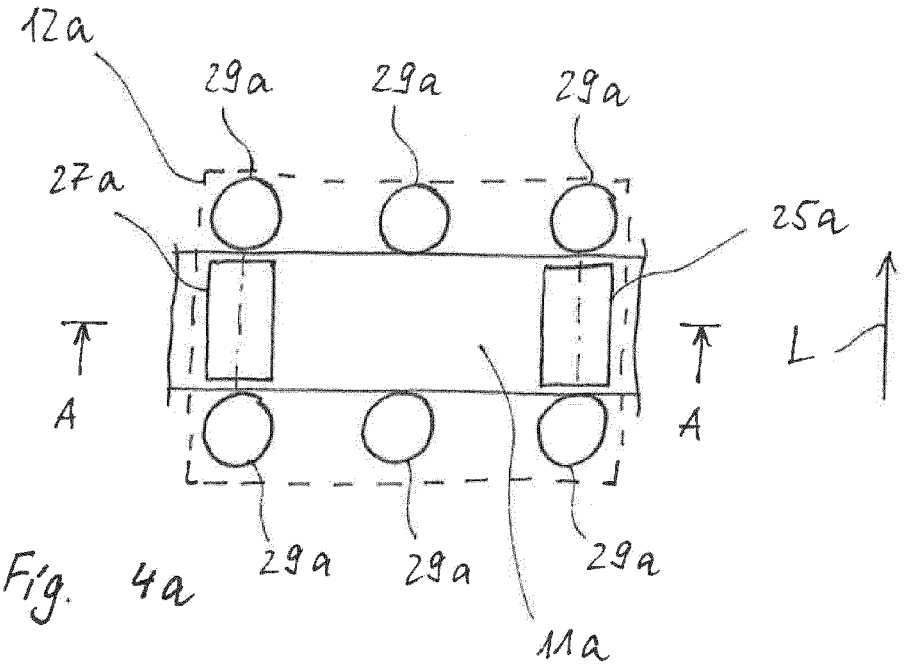
12a
29a
29a
29a
27a
25a
A
A
L
29a
29a
29a
11a

Fig. 4a

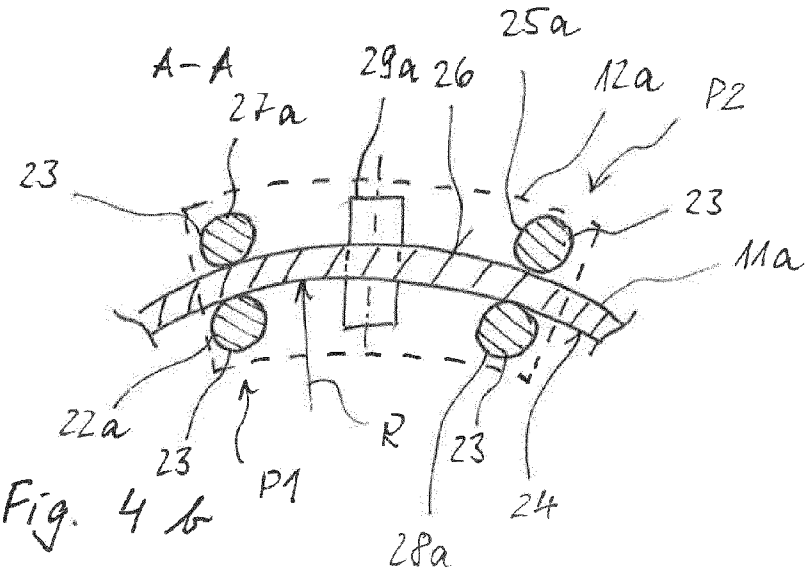
25a
A-A
29a
26
12a
P2
27a
23
23
11a
22a
23
P1
R
23
24
28a

Fig. 4b

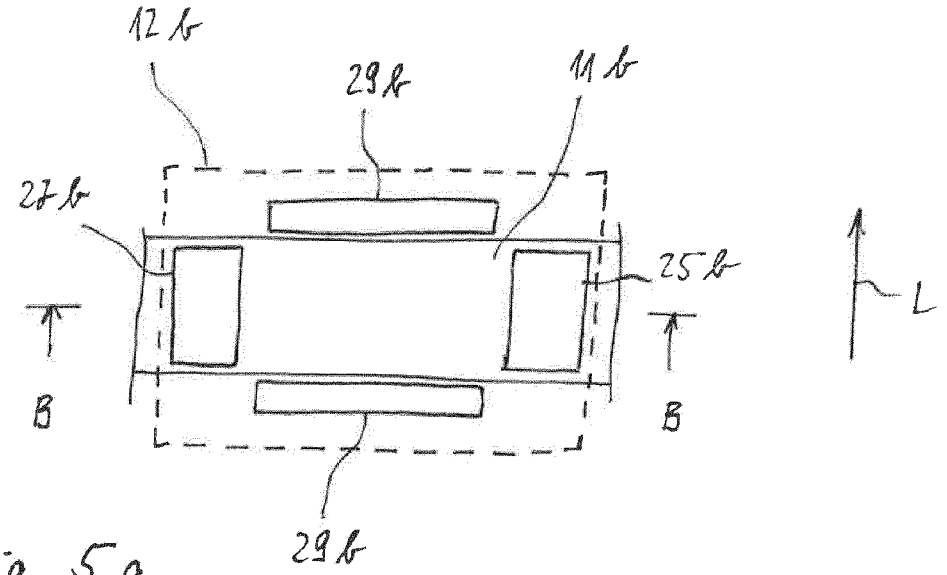
12b
29b
11b
27b
25b
L
B
B
29b

Fig. 5a

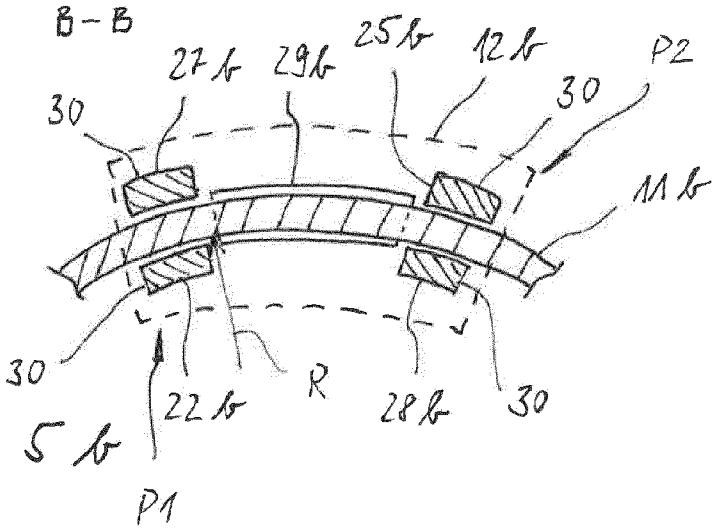
B-B
27b
29b
25b
12b
P2
30
30
11b
30
22b
R
28b
30
P1

Fig. 5b

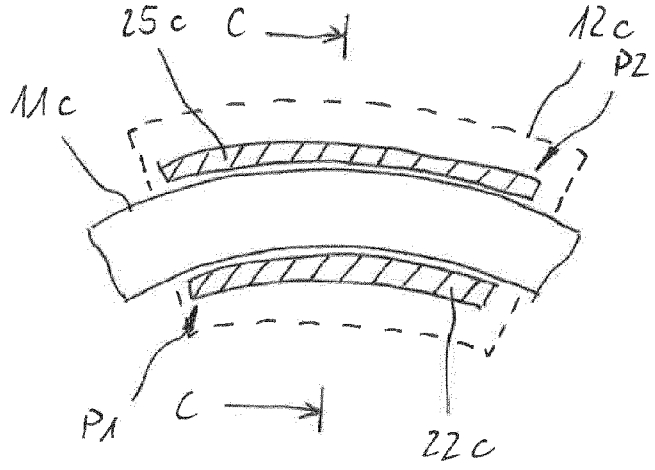


Fig. 6a

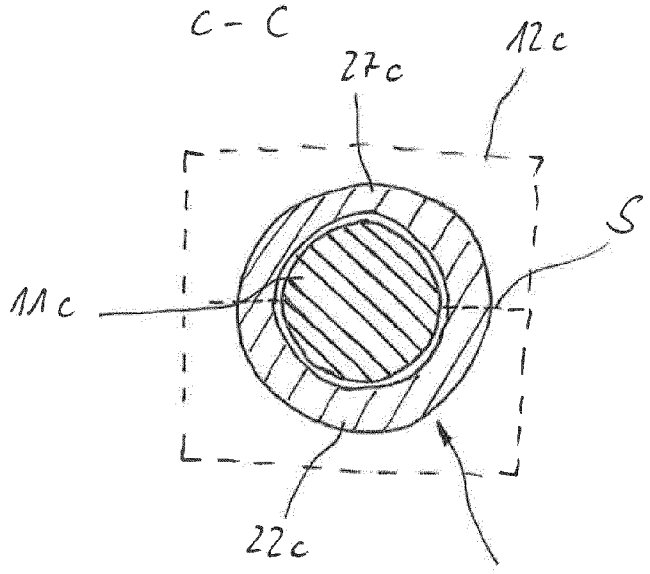


Fig. 6b