(No Model.)

F. G. & A. J. GIBBONS.

DEVICE FOR OPENING OR CLOSING GATES.

No. 590,702. Patented Sept. 28, 1897.

FIG. 1.

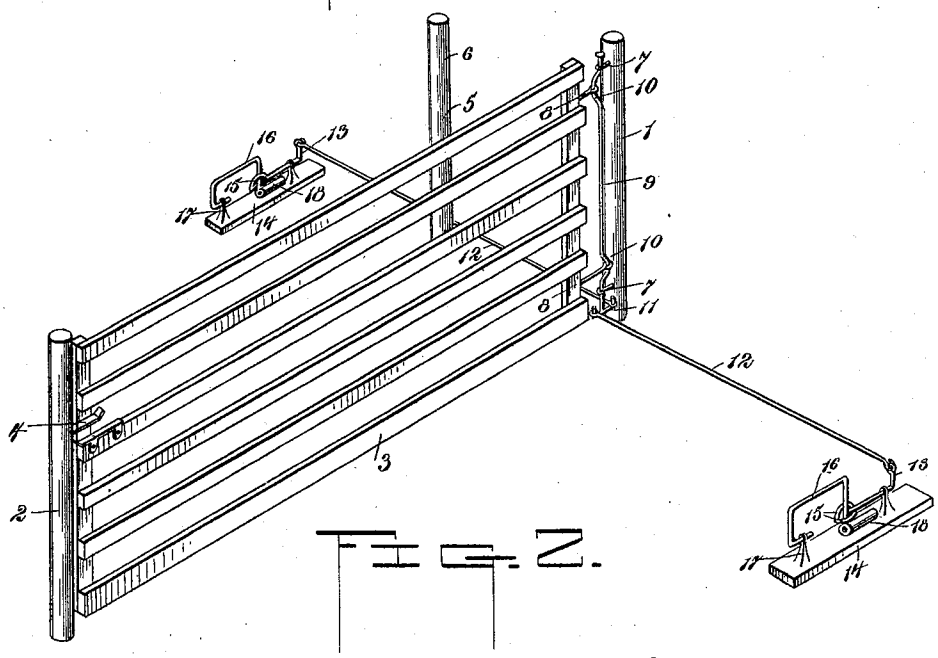

FIG. 2.

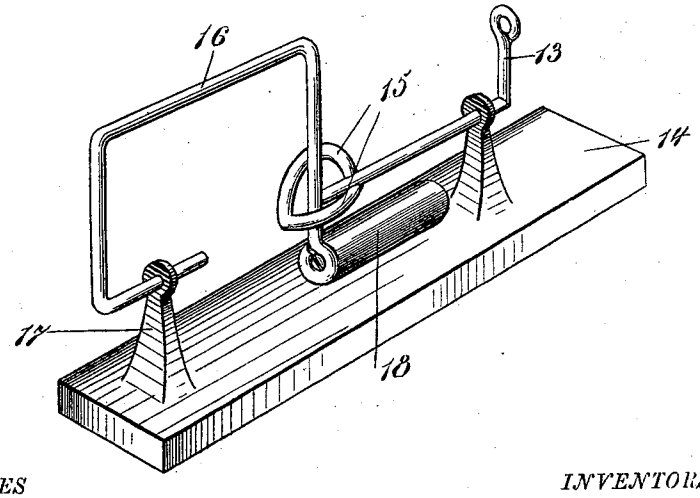

WITNESSES

C. Bradway

[illegible]

INVENTORS.

Francis G. Gibbons

Anthony J. Gibbons

By John Hetherington Attorney

THE NORRIS PETERS CO., PHOTO-LITHO., WASHINGTON, D. C.

UNITED STATES PATENT OFFICE.

FRANCIS G. GIBBONS AND ANTHONY J. GIBBONS, OF LEWISBURG, PENNSYLVANIA.

DEVICE FOR OPENING OR CLOSING GATES.

SPECIFICATION forming part of Letters Patent No. 590,702, dated September 28, 1897.

Application filed February 3, 1897. Serial No. 621,739. (No model.)

To all whom it may concern:

Be it known that we, FRANCIS G. GIBBONS and ANTHONY J. GIBBONS, citizens of the United States, residing at Lewisburg, in the county of Union and State of Pennsylvania, have invented certain new and useful Improvements in Devices for Opening or Closing Gates; and we do hereby declare the following to be a full, clear, and exact description of the invention, such as will enable others skilled in the art to which it appertains to make and use the same.

This invention relates to a novel construction in a gate and devices for operating the same; and it consists in the features of construction hereinafter fully described and specifically claimed.

In the accompanying drawings, forming part of this specification, Figure 1 is a perspective view of a gate and devices for operating the same that are constructed in accordance with this invention. Fig. 2 is a perspective view, taken on an enlarged scale, of the operating devices.

Referring now to the drawings, 1 indicates a gate-post, and 2 the latch-post. The gate 3 is pivoted to the post 1 and provided at its outer end with a latch 4 to engage the latch-plate 5 of the latch-post 2 and of the side post 6. The gate-post 1 is provided with forwardly-extending brackets 7, while the gate is provided with rearwardly-extending brackets 8. The outer ends of these brackets 7 and 8 are provided with openings or eyes to receive the hinge-rod 9. The upper and lower ends of the rod pass through the eyes of the brackets 7, while just below the upper bracket and above the lower bracket are the cranks 10, which pass through the brackets 8 of the gate. These cranks 10 extend in opposite directions in the manner shown. The lower end of the hinge-rod 9 is provided with the arms 11, to which the operating-rods 12 are fastened. The outer ends of these operating-rods 12 are fastened to the crank-shafts 13, which are supported in bearings on a sill 14. The inner ends of the crank-rods 13 are provided with two stops 15, extending radially therefrom, while one end of the lever 16 is pivoted upon the rod 13 between the stops. The other end of the lever 16 is pivoted by means of a bearing 17 upon the sill.

In Fig. 1 of the drawings the gate is shown as closed—that is to say, with the upper crank 10 of the rod 9 situated adjacent to the gate, and consequently the lower crank 10 on the opposite side thereof. It is noted that the brackets 8 differ in length, so that in this position the gate is practically horizontal. The levers 16 stand in an upright position, which is caused by the counterbalancing-weight 18, fastened to the lower end of the lever that is pivoted upon the rod 13, said counterbalancing-weight being sufficient to hold the lever 16 in an upright position. When the parts are in this position, it is seen that the stop 15 between the lever and the gate is also in an upright position and in contact with the side of the lever. It is seen, therefore, that when the lever 16 is moved toward the gate—for instance, by being run over by the wheel of a vehicle—the shaft 13 is turned upon its axis, which moves the rod 12 longitudinally, and consequently turns the pivot-rod 9 a quarter of a revolution. This has the effect of withdrawing the latch from the latch-post, which causes the gate to swing toward the post 6, whereupon the latch engages the latch-plate upon this post. It is seen also that the rod 12 on the other side of the gate, being drawn toward the gate, moves the stop 15 on the outside of the lever against the side of the same, and that consequently when the other lever is run over by the wheel it will move the parts in a reverse direction and thus cause the gate to be unlatched from the post 6, turned upon its pivot, and latched with the post 2. It is also noted that as soon as the lever 16 is released the counterbalancing-weight 18 will raise it to an upright position.

Having thus described the invention, what is claimed as new is—

The combination with a gate and latch post, of a gate, a short bracket near the upper end of said gate, a long bracket near the lower end of said gate, a hinge-rod pivoted upon the gate-post and provided with oppositely-extending cranks that are pivoted to the said

brackets, oppositely-extending crank-arms at the lower end of said hinge-rod, rods connected with said crank-arms and extending on opposite sides of the gate and connected with crank-shafts, stops upon said crank-shafts, and pivoted levers having one end situated between said stops and provided with counterbalancing-weights.

In testimony whereof we have signed this specification in the presence of two subscribing witnesses.

FRANCIS G. GIBBONS.
ANTHONY J. GIBBONS.

Witnesses:
OTTO STEMPLE,
FRANK HALFPENNY.