Jan. 28, 1958 T. A. SANDERS ET AL 2,821,011

METHOD FOR COMPRESSION SPLICING OF WIRES

Filed March 25, 1952 2 Sheets-Sheet 1

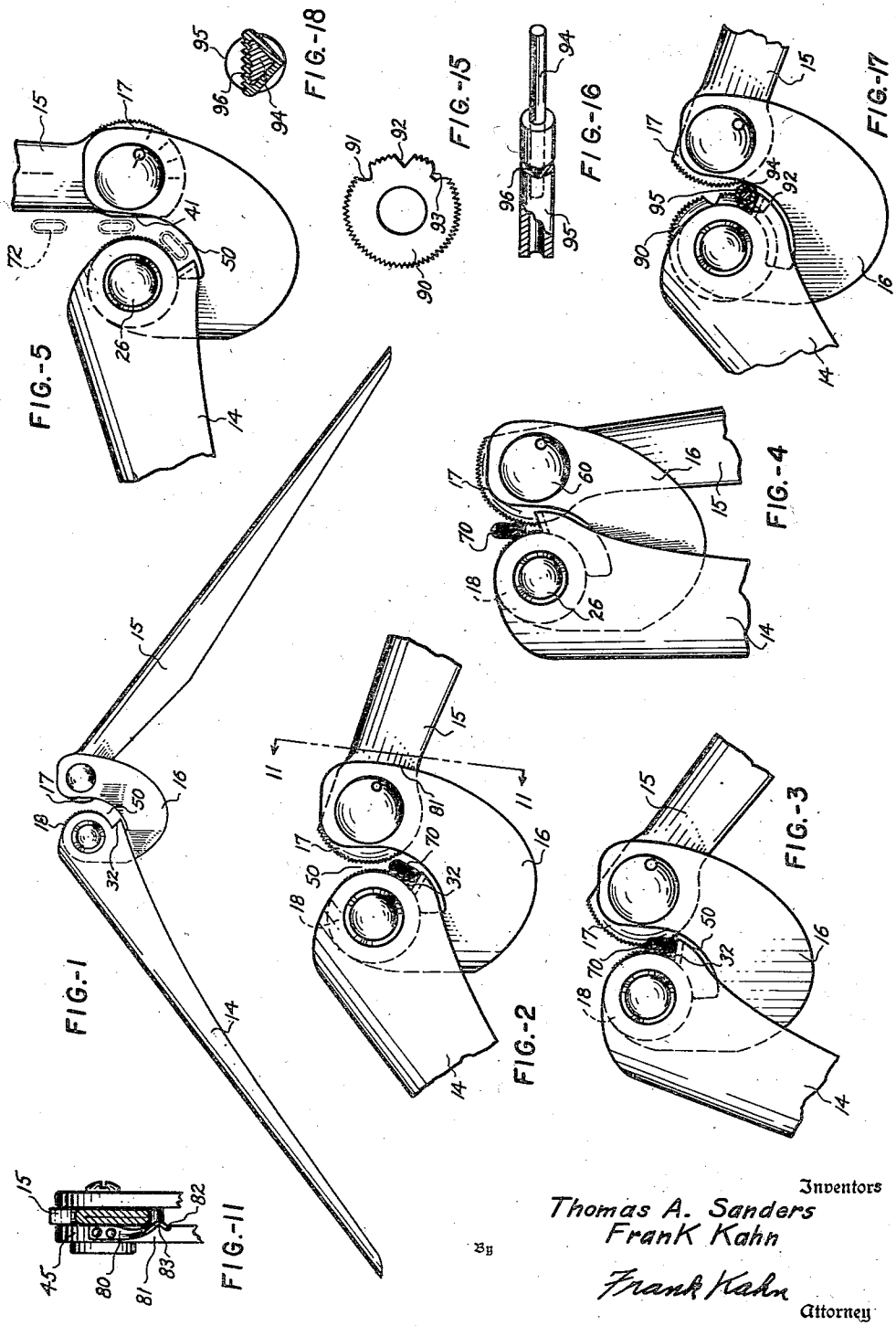

Inventors
Thomas A. Sanders
Frank Kahn

By Frank Kahn
Attorney

Jan. 28, 1958 T. A. SANDERS ET AL 2,821,011

METHOD FOR COMPRESSION SPLICING OF WIRES

Filed March 25, 1952 2 Sheets-Sheet 2

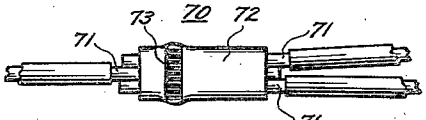

FIG.-12

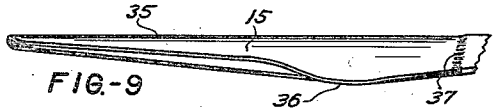

FIG.-9



FIG.-10

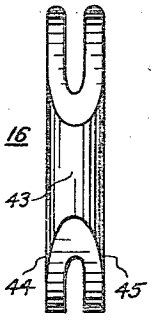

FIG.-8

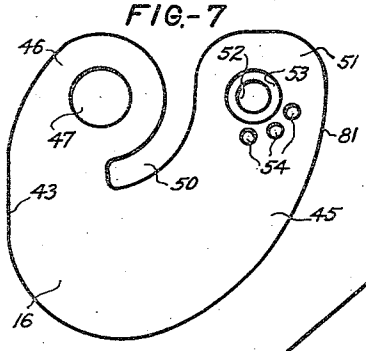

FIG.-7



FIG.-13

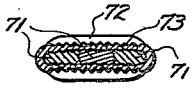

FIG.-14

FIG.-6

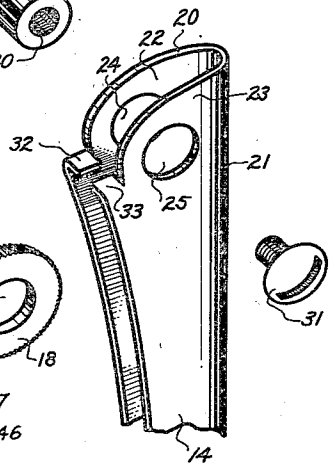

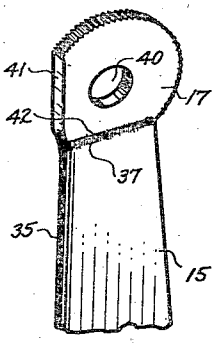

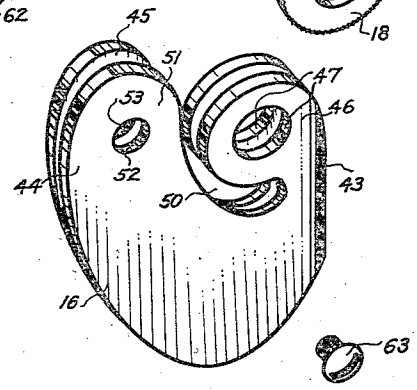

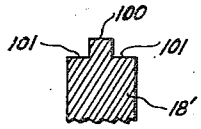

FIG.-19

Inventors
Thomas A. Sanders
Frank Kahn

By
Frank Kahn
Attorney

United States Patent Office 2,821,011 Patented Jan. 28, 1958

2,821,011

METHOD FOR COMPRESSION SPLICING OF WIRES

Thomas A. Sanders and Frank Kahn, Philadelphia, Pa.

Application March 25, 1952, Serial No. 278,426

8 Claims. (Cl. 29—155.55)

This invention relates to splicing of wires and cables, and more specifically to a method and tool for splicing ductile wires and cables with pressed connectors.

Splicing of wires and cables used for electrical conductors by inserting them in ductile sleeve connectors and then indenting the sleeve, has proved eminently successful and is rapidly supplanting other splicing means because of the saving of time and labor. In compression splicing of copper conductors, of sizes No. 8 AWG. and larger with an indenting tool, it has been found necessary to use a power-operated tool because the compressive force obtainable with a hand tool even though provided with compound leverage is inadequate to produce a satisfactory indentation. This is particularly true in transversely indenting multiconductor compression splices of the type described in United States Patent No. 2,467,913 dated April 19, 1949, to Thomas A. Sanders, wherein two or more conductors are arranged in side by side relation within an oval splicing sleeve. The tool illustrated in that patent closes substantially parallel jaws transversely on the sleeve and produces an indentation across the full width of the sleeve. With a tool of this for a given depth of indentation is directly proportional kind it is obvious that the compressive force required to the width of the splice. Experience has shown that a hand tool of this kind capable of satisfactorily indenting copper sleeves and conductors in the larger sizes requires a strenuous effort on the part of the operator, which soon tires him and causes excessive wear on the tool bearings.

We have discovered that it is readily feasible to produce the desired transverse indentation in a sleeve connector by making an initial indentation of relatively very small area to the desired depth and then advancing the indentation incrementally across the width of the sleeve. The small area of initial indentation permits a deep penetration to be accomplished with a relatively small force, easily applied with a hand tool. This same force is adequate to progressively advance the indentation across the width of the splice no matter how wide.

One of the principal objects of our invention is the method of producing a relatively long indentation in a compression sleeve splice by making an initial indentation of small area and then progressively advancing the indentation.

Another object of the invention is to provide an indenting tool capable of producing an initial indentation of small area and then of incrementally advancing the indentation to produce a long indentation.

A further object of the invention is to provide a hand-operated indenting tool of this character which is light in weight and produces a satisfactory indentation with relatively slight exertion on the part of the operator.

With these and other objects in view which will become apparent from the ensuing description and claims, the following sets forth the details of construction and combination of parts of a specific embodiment of the

splicing tool of our invention, which we illustrate as an example, and which will best be understood when read in conjunction with the accompanying drawing, in which:

Fig. 1 is a side elevational view of our splicing tool in position to begin indentation.

Figs. 2, 3, and 4 are fragmentary side elevational views of the tool while making an indentation in a splice, showing the positions respectively before, during and after making the indentation.

Fig. 5 is a fragmentary side elevational view of the tool in wide open position to receive the splice preparatory to beginning indentation.

Fig. 6 is an exploded fragmentary perspective view of the splicing tool showing the separate parts of the tool.

Fig. 7 is a side elevational view of the body member of the tool.

Fig. 8 is an edge elevational view of the body member of the tool.

Fig. 9 is a fragmentary perspective view of of the upper handle of the tool.

Fig. 10 is a fragmentary bottom plan view of the upper handle of the tool.

Fig. 11 is a fragmentary section on the line **11—11** of Fig. 2 showing the frictional click spring for impeding movement of the upper handle.

Fig. 12 is a plan view of a splice connecting two conductors with a third conductor, in which a transverse indentation has been made with the tool.

Fig. 13 is an end view of the splicing sleeve of Fig. 12 showing in section the emergent conductors, corresponding to the transverse configuration of sleeve and conductors at the point of indentation before making the indentation.

Fig. 14 is a transverse section through the indentation of the splice shown in Fig. 12, illustrating the indentation made with the tool and the condition of the sleeve and conductors after indentation.

Fig. 15 is a side elevational view of a modified idling indenter.

Fig. 16 is a fragmentary perspective view, partly in section of a wire spliced to a cylindrical sleeve illustrating an indentation made with the indenter of Fig. 15.

Fig. 17 is a fragmentary side elevation of the tool preparatory to making the indentation shown in Fig. 16.

Fig. 18 is a transverse sectional view through the indentation of the splice shown in Fig. 16.

Fig. 19 is a fragmentary transverse sectional view of another modification of idling indenter.

Referring to Figs. 1 to 7 of the drawing, the splicing tool of our invention is comprised essentially of a lower handle **14**, an upper handle **15** of substantially the same length, a body member **16**, an upper indenter **17** and an idling lower indenter **18**.

The lower handle **14** is of folded sheet metal, U-shaped in section, having a relatively large operative end **20** and tapering to a relatively small outer end of a size to fit the palm of the hand, with the bottom **21** of the U being disposed outwardly. Adjacent the end **20** the side walls **22** and **23** of the handle **14** are provided with transverse cylindrical openings **24** and **25** respectively, to receive a transverse pin **26** having a head **27** on one end for firmly engaging the outward side of the wall **22**. The other end of the pin **26** has an axially tapped opening **30** to receive a round-head screw **31** whose head is engageable with the outward side of the wall **23**. Adjacent their inward edges, the walls **22** and **23** are cut longitudinally inward from the end **20** for a short distance and bent substantially at right angles toward each other to form pushers **32** and **33**.

The lower indenter **18** is a peripherally-toothed disk

provided with an axial bore 34 proportioned for rotatively engaging the pin 26.

The upper handle 15 is of folded sheet metal of U-shaped section with the bottom 35 of the U outwardly disposed similar to the lower handle 14, having its outer end of relatively narrow width and gradually increasing in width to a maximum at a point 36 adjacent the inner or operative end 37. Inwardly from the point 36 the width decreases gradually to the inner end 37 which is about half as wide as at the point 36, with the side walls of the U-shape of the handle 15 being flattened together to form a flat plate from the point 36 to the end 37.

The upper indenter 17 is formed from a peripherally-toothed disk similar to and somewhat larger in diameter than the lower indenter 18, having an axial bore 40 and with its periphery truncated along two chords at approximately right angles to provide the flat edges 41 and 42. The upper indenter 17 is of the same thickness as the end 37 of the upper handle 15 and is welded thereto along the edge 42, with the edge 41 of the indenter 17 disposed in approximate alignment with the outward edge 35 of the handle 15, as indicated in Fig. 6.

The body member 16 is formed of heavy-gauge sheet metal folded over along the edge 43 to provide spaced parallel walls 44 and 45 of identical roughly oval peripheral shape. The spacing between the walls 44 and 45 is such as to accommodate with a slip fit the indenters 17 and 18 which are of equal thickness. Adjacent one end of the edge 43, the upper left part of the body member 16, as viewed in Fig. 7, is shaped to form a lower eye 46, centrally of which the walls 44 and 45 are provided with aligned transverse bores 47, 47 to accommodate the pin 26 with a slip fit. Bounding the right side of the lower eye 46 as viewed in Fig. 7, the body member 16 is provided with an arcuate slot 50 of circular arc concentric with the bores 47 and extending inwardly to a point approximately on a line drawn parallel to the edge 43 through the axis of the bores 47.

The portion of the body member 16 to the right of the lower eye 46, as viewed in Fig. 7, constitutes an upper eye 51 provided with concentric transverse bores 52 and 53 in the walls 44 and 45, respectively, the bore 52 being of smaller diameter than the bore 53, and the bores 52 and 53 being disposed in such relation to the lower eye 46 that the plane common to the common axis of bores 52 and 53 and of the bores 47 is approximately perpendicular to the edge 43. Centered on a circular arc concentric with and adjacent to the bore 53, at the lower right thereof as viewed in Fig. 7, the wall 45 is provided with three small transverse drilled holes 54 disposed in spaced relation to one another.

A spacing adjustment pin 60 provides engagement of the upper indenter 17 in the body member 16. The pin 60 comprises a three-stepped cylinder having a broad head 61 at one end and an axial tapped opening 62 at the other end to receive a round-head screw 63.

Engageable with a slip fit in the bore 53 of the body 16 the cylindrical step 64 is adjacent the head 61 of the pin 60 and has an axial length equal to the thickness of the wall 45. The intermediate or eccentric cylindrical step or bearing 65 of the pin 60 has its axis parallel to but displaced from that of the step 64 and an axial length equal to the spacing between the walls 44 and 45 of the body 16, with a diameter such that it does not extend radially outward beyond the step 64, and is rotatably engageable in the bore 40 of the upper indenter 17. The third cylindrical step 66 of the pin 60, at the end having the tapped opening 62, is coaxial with the step 64 and engageable with the bore 52 of the body 16, and has an axial length equal to the thickness of the wall 44. A rotational-stop pin 67, adjacent the step 64, and engageable in the holes 54, is fixed to the head 61 and extends axially inward therefrom.

The tool is assembled in the following manner. The lower handle 14 is slid over the lower eye 46 of the body 16 with the pushers 32 and 33 engaging the slot 50, until the bores 24 and 25 are aligned with the bores 47. The lower indenter 18 is then inserted within the eye 46 with its bore 34 aligned with the bores 47. The pin 26 is then inserted through the aligned bores 24, 47, 34, 47 and 25, and the screw 31 is tightened in the threaded opening 30. The upper indenter 17 is then inserted into the upper eye 51 of the body 16, with the handle 15 extending in the same general direction as the handle 14, until the bore 40 registers within the area of the bore 53. The pin 60 is then inserted through the bores 53, 40 and 52, so that the step 66 engages the bore 52, the step 65 engages the bore 40, the step 64 engages the bore 53 and the stop pin 67 engages one of the holes 54. The screw 63 is then tightened in the threaded opening 62.

The eccentric bearing 65, the stop pin 67, and the holes 54 are so related and disposed as to provide different fixed spacings between the indenters 17 and 18 when the stop pin 67 is engaged in the respective holes 54.

Figs. 12 to 14 illustrate the type of indentation made with our tool in a splice 70 connecting two conductors with a third conductor. The ends 71, 71 of solid electrical conductors from which the insulation has been stripped are positioned adjacent and parallel to each other in lapped relation within a sleeve 72. The sleeve 72 is of generally oblong transverse shape and is composed of ductile metal of good electric conductivity, such as copper. The sleeve 72 is preferably of such dimension relative to the encircled conductors 71 that they fit easily in the sleeve without excessive looseness, before indenting. After being operated upon by our tool, in a manner subsequently to be described, a transverse indentation 73 is formed in the sleeve 72 and the conductors 71 enclosed therein.

The operation of the tool is as follows: Beginning with the handles 14 and 15 collapsed together as they would normally be while the tool was being carried in the hand or pocket, the handles are opened out or separated approximately to the position shown in Fig. 1 in which the lower handle 14 has been rotated clockwise with respect to the body 16 until this movement is limited by the pushers 32 and 33 engaging the end of the slot 50. The upper handle 15 is then continued in counterclockwise rotation with respect to the body 16 until it occupies the position shown in Fig. 5, in which the flat edge 41 of the indenter 17 faces toward the pin 26. In this position the tool has a maximum opening in the slot 50 between the indenters, in readiness to receive a splice such as the splice 70, preparatory to making an indentation. The splice 70 to be indented is then fed downwardly as viewed in Fig. 5 into the slot 50 as indicated by the various positions of the sleeve 72 shown in dotted lines.

With the splice 70 adjacent the bottom of the slot 50, the handle 15 is rotated clockwise with respect to the body 16 until the position of the handle 15 is roughly coplanar with the axes of rotation of the two indenters, and then the handle 14 is rotated counterclockwise until the splice 70 is just engaged by both the indenters 17 and 18. In this position, approximately as illustrated in Fig. 2, the device is in readiness to begin making the indentation. The handles 14 and 15 are then forced together by manual pressure on their outward ends to advance the splice 70 between the indenters through the position shown in Fig. 3 until it is finally ejected from between the indenters outwardly of the slot 50, as shown in Fig. 4.

On beginning indentation, as the outer ends of the handles are brought together from the position of Fig. 2, the splice 70 is first forced by the pushers 32 and 33 into engagement with the indenters, and is then advanced between the indenters by the combined tangential forces exerted by the pushers 32 and 33 and the upper indenter 17. The lower indenter 18 is an idling indenter and rolls with the splice as it advances between the indenters.

In its passage between the indenters the flat sides of the splice **70** are subjected to extremely great transverse pressure which causes plastic flow of the metals of the splice and forces the peripheral teeth or serrations of the indenters deeply into each side of the splice. Both the sleeve **72** and the conductors **71** therein are flattened into a solid metallic mass to give maximum tightness and permanence to the splice, with the corrugating effect of the serrations of the indenters being found to extend through the sleeve **72** and being observable also on the flattened conductors therein. It should be observed that in its operation the tool first makes a partial indentation and then advances the indentation across the splice, thus making a resulting indentation with a considerably smaller force than would be necessary if the indentation were to be made by compressing the splice between serrated flat jaws of a compression tool of the type illustrated in the aforesaid United States Patent No. 2,467,913 to Thomas A. Sanders.

For convenience in holding the handle **15** in the position with respect to the body **16** as shown in Fig. 2, while moving the handle **14** to the illustrated position in readiness to begin indentation, a friction or click spring **80**, shown in Fig. 11, may be attached to the edge **81** of the wall **45** of the body **16**. The spring **80** has a flat portion adapted to engage and be fastened by screws or rivets to the edge **81** and a resilient portion **82** adapted for movement transverse to the edge **81**, the portion **82** having a click loop **83** extending sidewardly into the path of the handle **15**. Accordingly, when the handle **15** has been moved from the position shown in Fig. 5 to the position shown in Fig. 2, it engages the click **83** which slightly impedes its continued clockwise movement. The relative stiffness of rotation of the handles **14** and **15** in the body **16** is such that when not engaged by the click **83** the handle **15** is more readily rotatable than handle **14**, but upon engagement of the click **83** with the handle **15** the handle **14** is then more readily rotatable. When the actual indentation is begun however, the forces exerted are such as to render insignificant any effect contributed by the click **83**.

Instead of the lower idling indenter **18** being a symmetrical ring as illustrated in Fig. 6, its periphery may be provided with one or more notches to make special indentations. These notches may be of any desired size or shape such as in the modified lower indenter **90** shown in Fig. 15, having notches **91**, **92**, **93** of various generally V shapes. The notch **92** is illustrated as being of V shape having straight sides and the notches **91** and **93** having arcuate sides of respectively opposite curvature.

With the indenter **90** mounted in the splicing tool in place of the indenter **18**, the tool may be used very effectively to fasten a single wire **94** to an encircling hollow cylindrical sleeve **95**. The sleeve **95** containing the wire **94**, is placed in the V-notch **92** in readiness to begin indentation, as illustrated in Fig. 17. The handles **14** and **15** are then forced together as previously described and the sleeve **95** and wire **94** contained therein are forced between the indenters to produce a triangular indentation **96**. The triangular indentation **96**, shown in cross-section in Fig. 18, comprises a corrugated flat surface produced by the upper indenter **17** and two angularly disposed flat indentations produced by the two sides of the V-notch **92**. The wire **94** is also crushed and indented into a triangular shape, as illustrated in Fig. 18.

It is obvious that the portion of the idling indenter **90** taken clockwise between the notch **93** and the notch **91**, as shown in Fig. 15, is similar to the serrated periphery of the indenter **18** and can also be used to produce the indentation **73**. Furthermore, the notches **91**, **92** and **93** can be considered as merely exaggerated serrations of the indenter **18**, as the mechanical action of compressing the splice into engagement with the serrations or notches and advancing the idling indenter and engaged splice through the slot **50**, is identical in the case of both the indenters **18** and **90**. Also it is within the scope of our invention to have the notches **91**, **92** and **93** of any desired shape.

In splicing aluminum conductors with aluminum splicing sleeves, it has been found that deep indentations work-harden this metal to a stressed condition of brittleness which renders it more susceptible to tensile or bending fracture than in the unstressed state. It has been found that this defect can be overcome by providing stepped indenting surfaces on the upper and lower indenters to provide secondary indentations of the type disclosed in United States Patent No. 2,467,913 to Thomas A. Sanders. Fig. 19 shows a transverse section of a lower indenter **18'** similar to the indenter **18**, having a cylindrical primary indenting peripheral surface **100** identical with the serrated periphery of the indenter **18** and having on each side secondary stepped cylindrical indenting surfaces **101** of smaller diameter. The secondary indenting surfaces **101** may be smooth or serrated similarly to the primary indenting surface **100**. The upper indenter would be similarly provided with stepped secondary indenting surfaces. In the case of notched indenters, such as the indenter **90**, the secondary indenting surfaces (not illustrated) would be similarly stepped back from and follow the contours of the notches such as notches **91**, **92** and **93** of the indenter **90**, to provide secondary indentations associated with primary indentations of the type illustrated by the indentation **96**.

It is to be emphasized that the serrated indenting surfaces of indenters **17**, **18** and **90** not only produce serrated indentations in which the serrations extend through the sleeves and into the flattened conductors enclosed therein, but also provide deeper indentations of the sleeves (at the lands of the teeth) for a given applied force than would be obtained by the same force applied with the usual flat-surfaced indenters such as those illustrated in United States Patent No. 2,467,913 to Thomas A. Sanders. Furthermore the serrations, extending through the sleeve wall and into the underlying flattened conductors provide increased mechanical resistance to loosening forces as compared with flat-surfaced indentations. This feature applies to the top surface of indentation **96**, shown in Fig. 18, as well as to both top and bottom sides of the indentation **73**.

We have found that in the construction of the pushers **32** and **33** (see Fig. 6), it is important that they be properly proportioned in order to avoid producing undesirable deformations of the trailing edge of the splice as it is forced through the tool by these pushers. Not only should their radial length be greater than the width of the splice, but their longitudinal dimension should be adequate to prevent overstressing the sleeve edge. Furthermore, there is an optimum angle at which these pushers should engage the sleeve edge to provide smooth operation of the tool and a minimum of edge deformation of the splice. For example, referring to Fig. 2, if the engaging surface or face of the pusher **32** were radial to the rotational axis of the handle **14**, the splice **70** would tend to slide to the right off of the pusher **32** when the splice is advanced into engagement with the indenter **17**. We have discovered this tendency can be eliminated by inclining the engaging faces of the pushers to an angle of from about 15 degrees to about 25 degrees forwardly from radial, i. e., making an acute angle with the adjacent forwardly extending edges of the side walls **22** and **23**. It is also within the scope of our invention to have the engaging faces of these pushers hollowed out to a suitable curvature for properly engaging the splice to avoid excessive deformation of the sleeve and to prevent the splice from sliding off the pushers.

The upper indenter **17** has been described as being formed as a truncated disk and then welded to the folded sheet metal handle **15**. This weld is required to be of

high quality because a rather high stress may be developed at this juncture. An equally effective construction which eliminates the weld at this point of high stress is provided by making this indenter integral with an extension forming a portion or even all of the upper handle, by stamping or otherwise shaping a unitary combined indenter and handle from plate stock. A folded sheet metal or plastic handle continuation may then be riveted or otherwise attached to the handle extension of the indenter, outwardly of the point **36**, to provide a convenient grip.

Although we have illustrated the several modifications of indenters as having sharp edges, it is obvious that the indenting surfaces may be only generally of V shape and suitably rounded or sloped to prevent creating excessive stress concentrations in the indentations made in the splice.

Also, we have shown the splices connecting solid conductors, but it is to be understood that our tool may be used to make equally effective splices of stranded conductors, or of solid and stranded conductors.

Although the invention has been described in considerable detail, such description is intended as illustrative rather than limiting, as other embodiments as well as obvious modifications in construction and arrangement will be evident to those skilled in the art, without departing from the spirit of our invention.

We claim:

1. The method of splicing electrical conductors or the like which comprises disposing separate conductors in parallel lapped relation within an encircling ductile metal sleeve of generally oblong transverse shape and applying compression to both flats of said sleeve simultaneously and oppositely over a relatively small transverse area at one edge of said sleeve to the desired depth to form initial transverse generally V-shaped indentations in both flats of said sleeve adjacent said edge, and then progressively advancing the relatively small area of compression incrementally across the width of said sleeve to form successive generally V-shaped indentations such that the spacing between the centers of adjacent indentations is substantially the width of the indentations, and relieving the compression behind said area of compression as it is thus advaced, whereby to form opposing continuous transverse indentations across both flats of said sleeve and across each of the underlying encircled conductors, through the application of a relatively small compressive force.

2. The invention set forth in claim 1 characterized in that said indentations are made by applying rolling pressure with a serrated indenter.

3. The invention set forth in claim 1 characterized in that said indentations are made between spaced peripherally-serrated rolling indenters of relatively small radii of curvature.

4. The method of securing an electrical conductor or the like in an encircling ductile metal sleeve which comprises disposing a conductor in said sleeve, engaging said sleeve transversely in a generally V-shaped notched indenter, then applying to the opposite side of said sleeve compression over a relatively small transverse area beginning at one edge of said sleeve to form an initial transverse generally V-shaped indentation of correspondingly small area, and then progressively advancing the relatively small area of compression incrementally across the sleeve to the other edge to form successive generally V-shaped indentations such that the spacing between the centers of adjacent indentations is substantially the width of the indentations, and relieving the compression behind said area of compression as it is thus advanced, whereby to form a triangular transverse indentation in said sleeve and the encircled conductor.

5. The invention set forth in claim 4 characterized in that said compression is applied by rolling pressure with a serrated indenter.

6. The method of splicing electrical conductors or the like which comprises disposing separate conductors in parallel lapped relation within an encircling ductile metal sleeve of generally oblong transverse shape and applying compression to both flats of said sleeve simultaneously over opposed relatively small areas at one edge of said sleeve by means of manually actuated indenters to form initial oppositely disposed generally V-shaped indentations of small area in both flats of said sleeve adjacent said edge and then progressively advancing said opposed areas of compression across the width of said sleeve to form successive generally V-shaped indentations such that the spacing between the centers of adjacent indentations is substantially the width of the indentations, and simultaneously relieving the compression upon the indented areas rearwardly of said advancing areas of compression, whereby to form continuous transverse indentations across the flats of said sleeve and the underlying encircled conductors, through the application of a manually applied relatively small compressive force.

7. The method of securing an electrical conductor or the like in a ductile metal sleeve which comprises disposing a conductor in said sleeve, engaging a relatively narrow transverse portion of said sleeve with a backing and holding indenter, then applying to the opposite side of said sleeve by means of an indenter compression over a relatively small transverse area beginning at one edge of said sleeve to form an initially generally V-shaped transverse indentation of correspondingly small area, and then progressively advancing said area of compression incrementally across the sleeve to the other edge to form successive generally V-shaped indentations such that the spacing between the centers of adjacent indentations is substantially the width of the indentations, and relieving the compression behind said area as it is thus advanced, whereby to form a generally flat indentation in said opposite side.

8. The invention set forth in claim 7 characterized in that said compression is applied by a peripherally-serrated rolling indenter.

References Cited in the file of this patent

UNITED STATES PATENTS

1,625,266	Mast	Apr. 19, 1927
2,279,677	Heinrich	Apr. 14, 1942
2,288,348	Funk	June 30, 1942
2,426,492	Dupre	Aug. 26, 1947
2,427,756	West	Sept. 23, 1947
2,435,562	Swengel	Feb. 3, 1948
2,469,426	Anthony	May 10, 1949
2,576,528	Matthysse	Nov. 27, 1951
2,590,261	Matthysse et al.	Mar. 25, 1952
2,591,442	Lacy-Hulbert et al.	Apr. 1, 1952

FOREIGN PATENTS

709,818	Germany	Aug. 27, 1941

OTHER REFERENCES

Electrical Manufacturing, May 1949, Fig. 4 of article on "Solderless-Type Wire Terminals."