C. H. BISSELL & E. G. SMITH.

ELECTRICAL CONNECTION.

APPLICATION FILED JAN. 8, 1914.

1,222,721.

Patented Apr. 17, 1917.

2 SHEETS—SHEET 1.

Fig. 1.

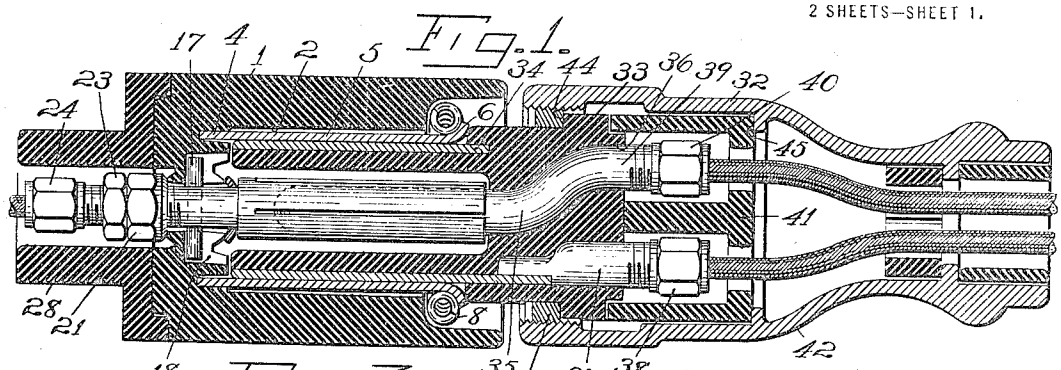

Fig. 3.

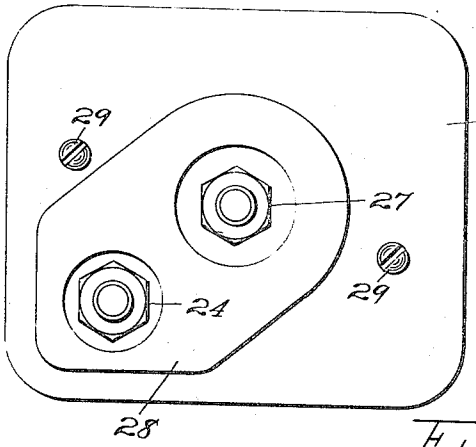

Fig. 4.

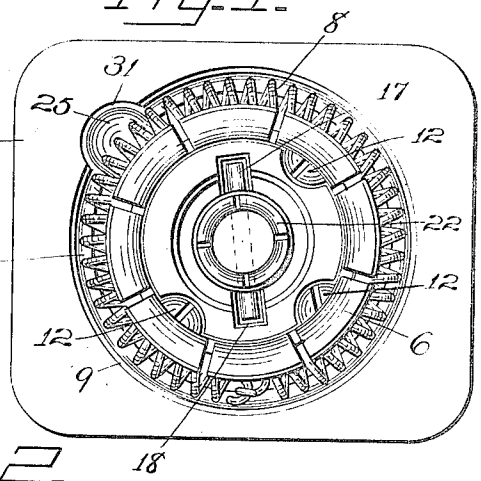

Fig. 2.

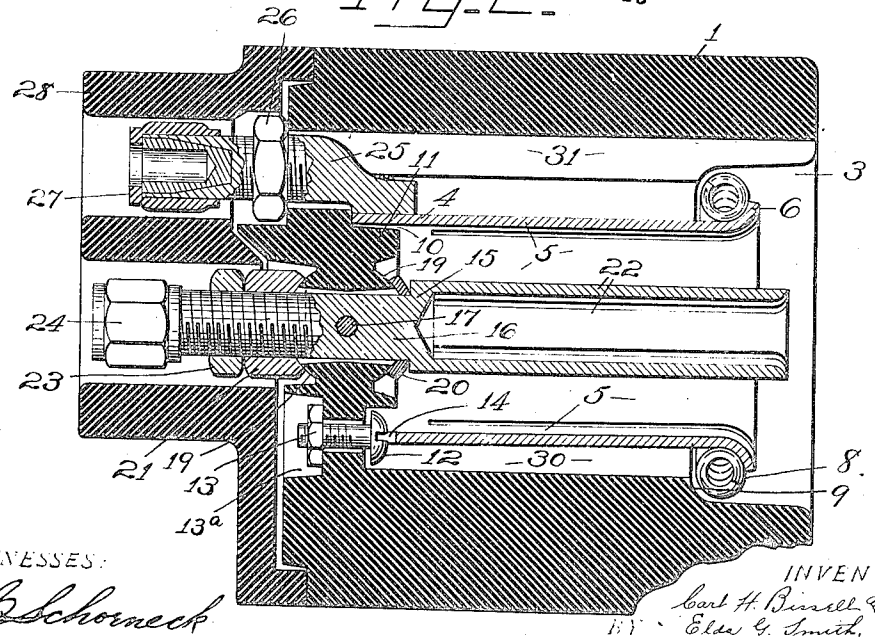

WITNESSES:

O. Schorneck

Chas. A. Young.

INVENTORS.

Carl H. Bissell &c.

BY Elder G. Smith.

ATTORNEYS.

Parson Hall & Bodell.

C. H. BISSELL & E. G. SMITH.

ELECTRICAL CONNECTION.

APPLICATION FILED JAN. 8, 1914.

1,222,721.

Patented Apr. 17, 1917.

2 SHEETS—SHEET 2.

Fig. 5.

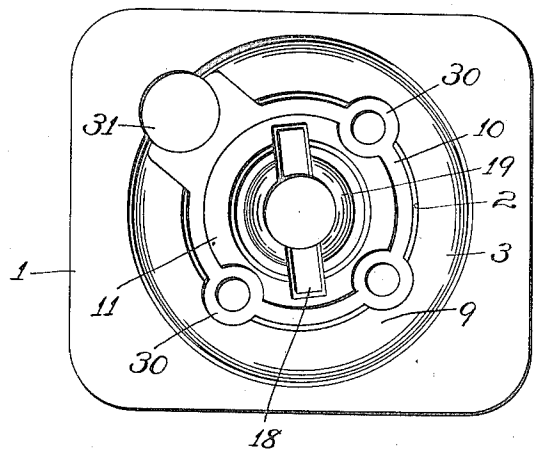

Fig. 6.

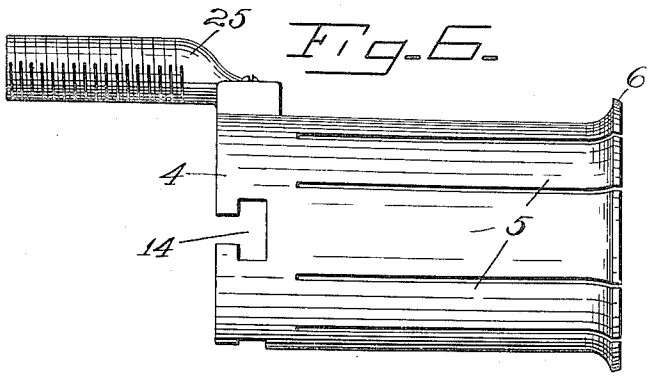

Fig. 7.

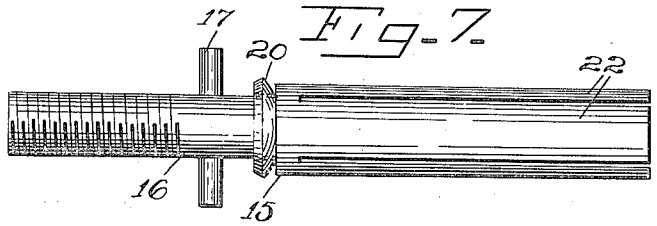

Carl H. Bissell Ed.
Elda G. Smith,
INVENTORS.

WITNESSES:
C. C. Schoeneck
Chas. H. Young.

BY Parsons Hall & Bodell,
ATTORNEYS.

UNITED STATES PATENT OFFICE.

CARL H. BISSELL AND ELDA G. SMITH, OF SYRACUSE, NEW YORK, ASSIGNORS TO CROUSE-HINDS COMPANY, OF SYRACUSE, NEW YORK, A CORPORATION OF NEW YORK.

ELECTRICAL CONNECTION.

1,222,721. Specification of Letters Patent. Patented Apr. 17, 1917.

Application filed January 8, 1914. Serial No. 810,993.

To all whom it may concern:

Be it known that we, CARL H. BISSELL and ELDA G. SMITH, citizens of the United States, and residents of Syracuse, in the county of Onondaga and State of New York, have invented a certain new and useful Electrical Connection, of which the following is a specification.

This invention has for its object the production of an electrical connection or socket, particularly applicable for use on railway cars for receiving the plug in the feed circuit for charging at stations the storage batteries of the cars; and the invention consists in the combinations and constructions hereinafter set forth and claimed.

In describing this invention, reference is had to the accompanying drawings, in which like characters designate corresponding parts in all the views.

Figure 1 is a longitudinal sectional view of our socket with one form of plug therein.

Fig. 2 is a longitudinal sectional view of the socket.

Figs. 3 and 4 are opposite end elevations of parts seen in Fig. 2.

Fig. 5 is an end view of the body of the socket, the contents being removed.

Figs. 6 and 7 are elevations of the sleeve terminal and the central terminal, respectively.

This electrical socket comprises, generally, a body, an outer sleeve terminal located in the body and including a circular series of contacts, and spring means acting on the contacts to compress the same radially. This socket also preferably includes a central terminal capable of lateral movement relatively to its axis.

1 is the body composed of a block of insulation, the body having a lengthwise recess 2 opening through one end thereof and terminating short of the other end, this recess including an enlargement 3 at one end which opens through one end face of the body 1.

4 is the outer sleeve terminal located in the recess 2 and secured therein at its inner end, the sleeve being slotted longitudinally from its outer end, the slots terminating short of the inner end of the sleeve and forming a circular series of lengthwise clamping contacts 5. The outer ends of the contacts are flared outwardly at 6 in the enlargement 3 and form an entrance for guiding the plug into the sleeve. Preferably said outer ends 6 of the contacts 5 terminate between the inner and outer ends of the enlargement 3 and their outer extremities are spaced apart from the inner face of the peripheral wall of said enlargement.

The spring means, acting radially on the contacts 5, is here shown as an annular coiled spring 8 expansible and contractile in diameter and encircling the free ends of the contacts 5 in the rear of the outwardly flared ends 6 of the contacts, the spring 8 being located in the enlargement 3 of the recess 2 and being held from undue axial movement by the bottom wall 9 of the enlargement and by the rear sides of the flared ends of the contacts 5, Fig. 2. The spring also engages the inner circumferential wall of the enlargement after the contacts have been spread outwardly a predetermined amount, and hence prevents undue spreading or distortion of the contacts. The annular end surfaces of the spring 8 engaged with the bottom wall of the enlargement 3 and the rear sides of the flared ends 6 of the contacts 5 are rounding in cross-section and are thus free to roll more or less on the surfaces engaged therewith for reducing the liability of binding and straining of said spring and the flared ends 6.

The inner end of the sleeve 4 is located in an annular groove 10, Figs. 2 and 5, in the bottom 11 of the recess 2, and is held in position by means of screws 12 attached to the inner end of the sleeve 4 and extending through the bottom 11 and threading into nuts 13 located in sockets 13^a on the outer side of the bottom 11.

Preferably, the sleeve is formed with T shape slots 14, Fig. 6, the legs of which open through the inner edge of the sleeve, and the screws 12 have their heads located in the heads of the T slots and their shanks in the legs of the T slots and extending through openings in the bottom 11 of the body 1.

15 is the central terminal which is located within the sleeve terminal 4 and is connected to the body 1 or the bottom 11 of the recess to have a slight movement laterally relatively to its axis. As here shown, the terminal 15 includes a shank portion 16 ex-

tending through the bottom 11 of the recess 2 and held from rotation by a pin 17 extending transversely thereof into slots 18, Fig. 5, in the bottom 11.

Preferably, the terminal 15 is connected to the bottom 11 by a ball and socket joint, the bottom being formed with the ball 19, and the shank of the central terminal 15 having a concave washer 20 thereon which engages the ball on the front side thereof, and a nut 21 screwing on said shank and formed with a concave face engaging the ball 19 on the rear side thereof. The ball and socket joint pivotally connects the central terminal 15 to the body 1. The outer end portion of the central terminal 15 is tubular and slotted to form a circular series of contacts 22.

The rear end of the shank 16 is threaded for the nut 21 and a jam nut 23 screwing against said nut 21 and also for receiving a suitable wire coupling 24. The terminal 4 is also provided with a wire terminal as a shank 25 at one side thereof which extends through an opening in the bottom 11 of the recess 2 and to the rear of the body 1 and on which a nut 26 turns against the bottom 11; the shank 25 is also provided at its rear end with a suitable wire coupling 27.

The nuts 21 and 23 serve to hold the central terminal in position and the nut 26 may serve to hold the outer sleeve terminal in position and the screws 12 may be dispensed with, if desired. The portions of the shanks 16 and 25, projecting to the rear of the bottom 11 of the body 1, are inclosed in a suitable housing 28 which is secured to the bottom 11 by screws 29.

When the sleeve 4 is being placed in position in the body 1, the screws 12 are placed in the T slots 14, and when the sleeve 4 is being inserted in the recess 2, the heads of these screws 12 pass along lengthwise grooves 30 formed in the inner circumferential face of the recess 2. The shank 25 also passes along another lengthwise groove 31 in the circumferential face of the recess 2.

32 designates the plug which is composed of a body of insulation 33 encircled by a sleeve contact 34 for entering the outer sleeve terminal 4 of the socket and which supports the central terminal 35 for entering the tubular portion of the central terminal 15 of the socket, the central terminal 35 of the plug being located in the axial passage 36 in the body 33 of the plug. The central terminal 35 is shorter than the sleeve contact 34 and is of such length as to enter the central terminal 15 of the socket just after the sleeve contact 34 enters the outer sleeve terminal 4 of the socket. The sleeve terminal 34 of the plug is provided with a wire terminal 37 extending through the rear end of the body 33 and provided with a wire coupling 38 at its rear end, and the central terminal 35 is also formed with a wire terminal 39 extending beyond the rear end of the body 33 of the plug and having a wire coupling 40 at its rear end. The rear ends of the wire terminals 37, 39 are located in recesses in a block 41 of insulation at the rear end of the body 33 of the plug.

The body 33 and block 41 are held in position in a suitable housing by means of a threaded ring 43 screwing into the front end of the housing against a shoulder 44 on the body 33 and pressing the body 33 and block 41 rearwardly toward an internal annular shoulder 45 in the housing 42, against which the block 41 abuts. The construction of the plug forms no part of this invention.

In operation, the socket is located in a suitable housing not shown which is swiveled to the car or to the trucks thereof, and when it is desired to charge the battery of the car at a station, the plug, which is attached to the charging circuit at the station, is inserted in the socket. The plug is, of course, permanently connected in the charging circuit by wires usually located between the car tracks. Should the trainman neglect to remove the plug before the train starts, the body will swing around until the pull on the plug, and the wires connected thereto, is in nearly a straight line when the plug will be withdrawn owing to the fact that the train is in motion. However, this pull is not in an exact straight line, and owing to the annular coiled spring and to the movement of the central terminal 15 laterally relatively to its axis, wrenching and distortion of the contacts 5 and 22 are avoided.

What we claim is:—

1. An electrical socket comprising a sleeve terminal having its inclosing wall provided with a circular series of lengthwise clamping contacts, the free ends of the contacts being flared outwardly, and an annular spring expansible and contractile in diameter, the spring encircling the contacts and being seated against the rear sides of said flared ends, substantially as and for the purpose described.

2. An electrical socket comprising a sleeve terminal slotted longitudinally from one end thereof, the slots terminating short of the other end forming a circular series of clamping contacts, the free ends of the contacts being flared outwardly, and an annular coiled spring encircling the contacts and being seated against the rear sides of the flared ends, substantially as and for the purpose specified.

3. An electrical socket comprising a body having an axial recess formed with an enlargement, a sleeve terminal arranged within the recess and provided with a circular series of lengthwise clamping contacts, and an annular spring expansible and contractile in diameter, the spring being arranged in the

enlargement and encircling and coacting with the contacts, substantially as and for the purpose set forth.

4. An electrical socket comprising a body having an axial recess formed with an enlargement, a sleeve terminal arranged within the recess and provided with a circular series of lengthwise clamping contacts, portions of the contacts being extended outwardly in the enlargement, and an annular spring expansible and contractile in diameter, the spring being arranged in the enlargement and encircling the contacts and coacting with the outwardly extended portions of said contacts, substantially as and for the purpose specified.

5. An electrical socket comprising a body having a cylindrical recess formed with an enlargement at one end which opens through one end of the body, a circular series of contacts extending into the recess and having their ends projecting into the enlargement thereof and flared outwardly, and an annular coiled spring encircling the contacts within the enlargement, substantially as and for the purpose set forth.

6. An electrical socket comprising a body having an axial recess, a sleeve terminal arranged within the recess and provided with a circular series of lengthwise clamping contacts, and an annular spring expansible and contractile in diameter and encircling the contacts within the recess, the inner face of the spring coacting with the outer faces of the contacts and the periphery of the spring coacting with the inner face of the recess, substantially as and for the purpose described.

7. An electrical socket comprising a body having an axial recess formed with an enlargement, a sleeve terminal arranged within the recess and provided with a circular series of lengthwise clamping contacts, portions of the contacts being extended outwardly in the enlargement, and an annular spring expansible and contractile in diameter, the spring being arranged in the enlargement and encircling the contacts, the inner face of the spring coacting with the outwardly extended portions of said contacts and the periphery of the spring coacting with the inner face of the peripheral wall of the enlargement, substantially as and for the purpose set forth.

8. An electrical socket comprising a body having an axial recess formed with an enlargement, a sleeve terminal arranged within the recess and provided with a circular series of lengthwise clamping contacts, the free ends of the contacts being extended outwardly in the enlargement and spaced apart from the inner face of the peripheral wall of said enlargement, and an annular spring expansible and contractile in diameter, the spring being arranged in the enlargement and encircling the contacts, the inner face of the spring coacting with the rear sides of the outwardly extended ends of the contacts and the periphery of the spring coacting with the inner face of said peripheral wall of the enlargement, substantially as and for the purpose specified.

9. An electrical socket comprising a body having an axial recess provided with an annular engaging shoulder, a sleeve terminal arranged within the recess and provided with a circular series of lengthwise clamping contacts, portions of the contacts being extended outwardly in advance of said shoulder, and an annular spring expansible and contractile in diameter and encircling the contacts within the recess, one end of the spring engaging said shoulder and its other end engaging the outwardly extended portions of the contacts, substantially as and for the purpose set forth.

10. An electrical socket comprising a body having an axial recess provided with an annular engaging shoulder, a sleeve terminal arranged within the recess and provided with a circular series of lengthwise clamping contacts, portions of the contacts being extended outwardly in advance of said shoulder, and an annular spring expansible and contractile in diameter and encircling the contacts within the recess, one end of the spring being formed with an annular surface convex in cross-section engaging said shoulder and the other end of the spring being formed with an annular surface convex in cross-section engaging the outwardly extended portions of the contacts, substantially as and for the purpose specified.

11. An electrical socket comprising a body having an axial recess provided with an annular engaging shoulder, a sleeve terminal arranged within the recess and provided with a circular series of lengthwise clamping contacts, portions of the contacts being extended outwardly in advance of said shoulder, and an annular coiled spring expansible and contractile in diameter and encircling the contacts within the recess, one end of the spring engaging said shoulder and its other end engaging the outwardly extended portions of the contacts, substantially as and for the purpose described.

12. An electrical socket comprising a body having an axial recess formed with an enlargement, a sleeve terminal arranged within the recess and provided with a circular series of lengthwise clamping contacts, the free ends of the contacts being extended outwardly in the enlargement, and an annular spring expansible and contractile in diameter, the spring being arranged in the enlargement and encircling the contacts, and one end of the spring engaging the inner end of the enlargement and its other end engaging the rear sides of the outwardly

extended ends of the contacts, substantially as and for the purpose set forth.

13. An electrical socket comprising a body having an axial recess provided with an annular engaging shoulder, a sleeve terminal arranged within the recess and provided with a circular series of lengthwise clamping contacts, portions of the contacts being extended outwardly in advance of said shoulder, and an annular spring expansible and contractile in diameter, the inner face of the spring coacting with the outer face of the contacts and the periphery of the spring coacting with the inner face of the recess and one end of the spring engaging said shoulder and its other end engaging the outwardly extended portions of the contacts, substantially as and for the purpose set forth.

14. An electrical socket comprising a body having an axial recess formed with an enlargement, a sleeve terminal arranged within the recess and provided with a circular series of lengthwise clamping contacts, the free ends of the contacts being extended outwardly in the enlargement and spaced apart from the inner face of the peripheral wall of said enlargement, and an annular spring expansible and contractile in diameter, the spring being arranged in the enlargement and encircling the contacts, the inner face of the spring coacting with the rear sides of the outwardly extended ends of the contacts and the periphery of the spring coacting with the inner face of said peripheral wall of the enlargement, and one end of the spring engaging the inner end of the enlargement and its other end engaging the rear sides of the outwardly extended ends of the contacts, substantially as and for the purpose set forth.

15. An electrical socket comprising a body having an axial recess formed with an enlargement, a sleeve terminal arranged within the recess and provided with a circular series of lengthwise clamping contacts, the free ends of the contacts being extended outwardly in the enlargement and terminating between the ends of the enlargement and being spaced apart from the inner face of the peripheral wall of said enlargement, and an annular coiled spring expansible and contractile in diameter, the spring being arranged in the enlargement and encircling the contacts, the inner face of the spring coacting with the rear sides of the outwardly extended ends of the contacts and the periphery of the spring coacting with the inner face of said peripheral wall of the enlargement, and one end of the spring engaging the inner end of the enlargement and its other end engaging the rear sides of the outwardly extended ends of the contacts, substantially as and for the purpose set forth.

16. An electrical socket comprising a body formed with a cylindrical recess opening through one end thereof and terminating short of the other end; the body being formed with an annular groove in the bottom of the recess, a sleeve terminal located in the recess and having its inner end extending into the groove and means for holding the sleeve terminal in the groove, said means extending through the bottom of the groove, substantially as and for the purpose described.

17. An electrical socket comprising a body formed with a cylindrical recess opening through one end thereof and terminating short of the other end, a sleeve terminal located in the recess and formed with a T slot at its inner end, the leg of the T slot opening through the inner edge of the sleeve, and a fastening screw having its head located in the head of the T slot and its shank extending through the leg of the T slot and through the bottom of said recess, substantially as and for the purpose specified.

18. An electrical socket comprising a body formed with a cylindrical recess opening through one end thereof and terminating short of the other end, the body being formed with an annular groove in the bottom of the recess, a sleeve terminal located in the recess and formed with a T slot at its inner end, the leg of the T slot opening through the inner edge of the sleeve, and a fastening member having its head located in the head of the slot and its shank extending through the leg of the slot and through the bottom of said recess, substantially as and for the purpose specified.

19. An electrical socket comprising a body formed with a cylindrical recess opening through one end thereof and terminating short of the other end, the body being formed with a lengthwise groove in the inner face of the recess, and an opening extending through the bottom of the recess and communicating with the inner end of the groove, a sleeve terminal located in the recess, and means for securing the sleeve terminal in the recess, said means being of greater thickness than the wall of the sleeve terminal and being movable in the lengthwise groove, a portion of said means being extended into said opening, substantially as and for the purpose specified.

20. An electrical connection comprising an outer sleeve terminal which is expansible and contractile, and a central terminal within the sleeve and movable laterally relatively to its axis, substantially as and for the purpose specified.

21. An electrical connection comprising an outer sleeve terminal which is expansible and contractile, and a central terminal within the sleeve and movable laterally relatively to its axis, said terminal being pivoted at the

inner end of the sleeve, substantially as and for the purpose set forth.

22. An electrical socket comprising a supporting body, and a central terminal having a rigid axial shank connected to the body to move laterally relatively thereto and a circular series of spring contacts for receiving a plug, the series of contacts being yieldable laterally relatively to the rigid shank and to each other, substantially as and for the purpose set forth.

23. An electrical socket comprising a body formed with a lengthwise recess opening through one end and terminating short of the other end, an outer terminal located in the recess and including a circular series of contacts fixed at their inner ends to the body, a central terminal pivoted to the body at the inner end of the recess and having its outer end portion tubular and composed of a circular series of contacts, and an annular coiled spring encircling the contacts of the outer terminal, substantially as and for the purpose set forth.

In testimony whereof, we have hereunto signed our names in the presence of two attesting witnesses, at Syracuse, in the county of Onondaga, in the State of New York, this 22nd day of December, 1913.

CARL H. BISSELL.
ELDA G. SMITH.

Witnesses:
C. C. SCHOENECK,
K. KIMMAN.