March 31, 1925. 1,531,839

J. F. BOORAEM

METHOD AND APPARATUS FOR ENAMELING BRICK OR TILE

Filed July 12, 1922 3 Sheets-Sheet 1

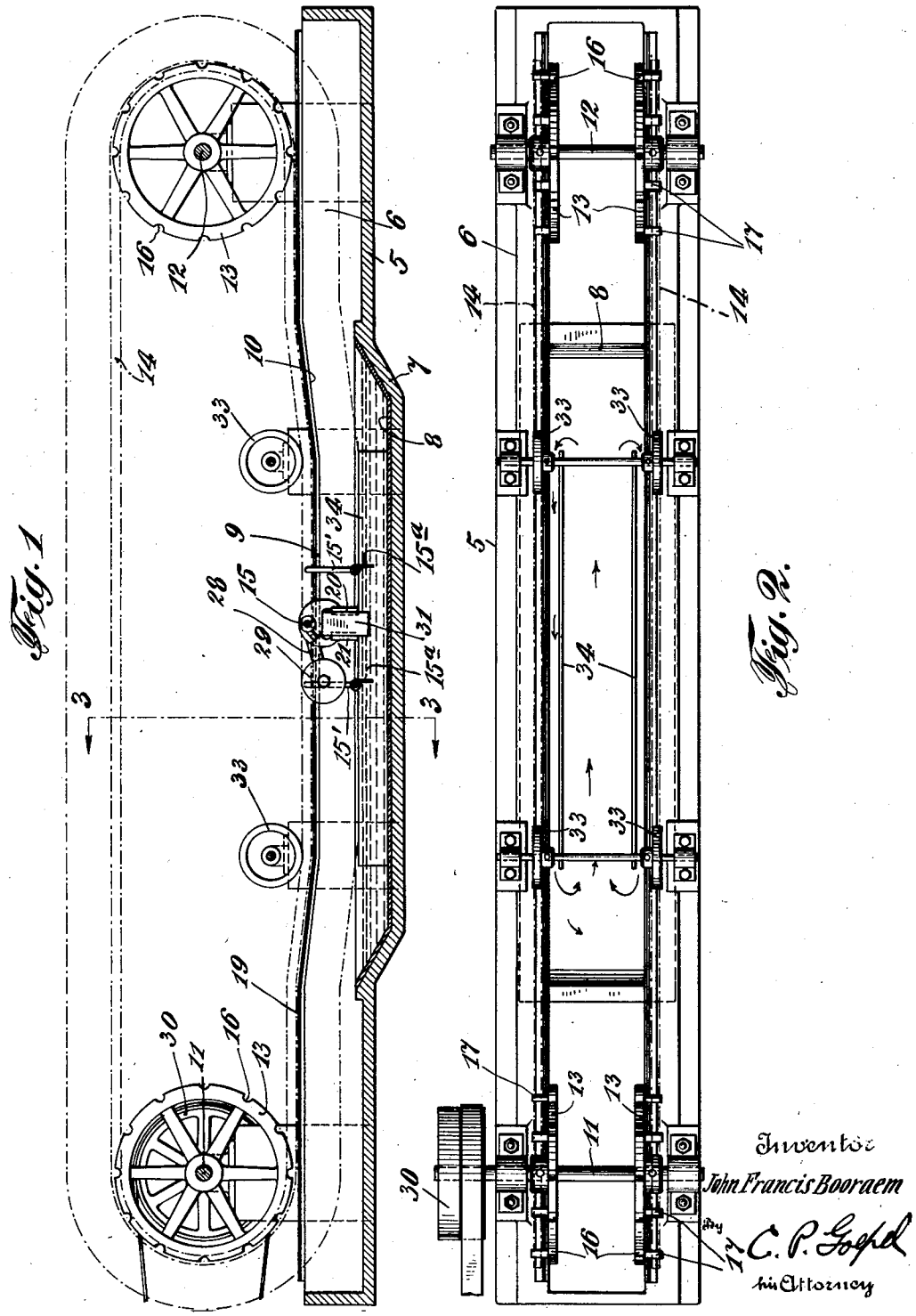

March 31, 1925. 1,531,839

J. F. BOORAEM

METHOD AND APPARATUS FOR ENAMELING BRICK OR TILE

Filed July 12, 1922 3 Sheets-Sheet 2

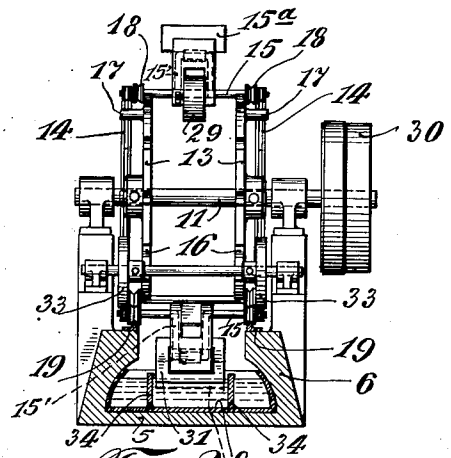

Fig. 3.

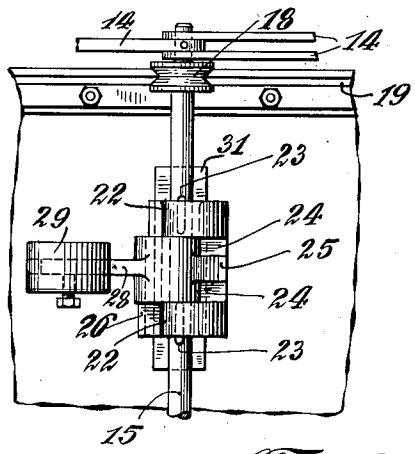

Fig. 6.

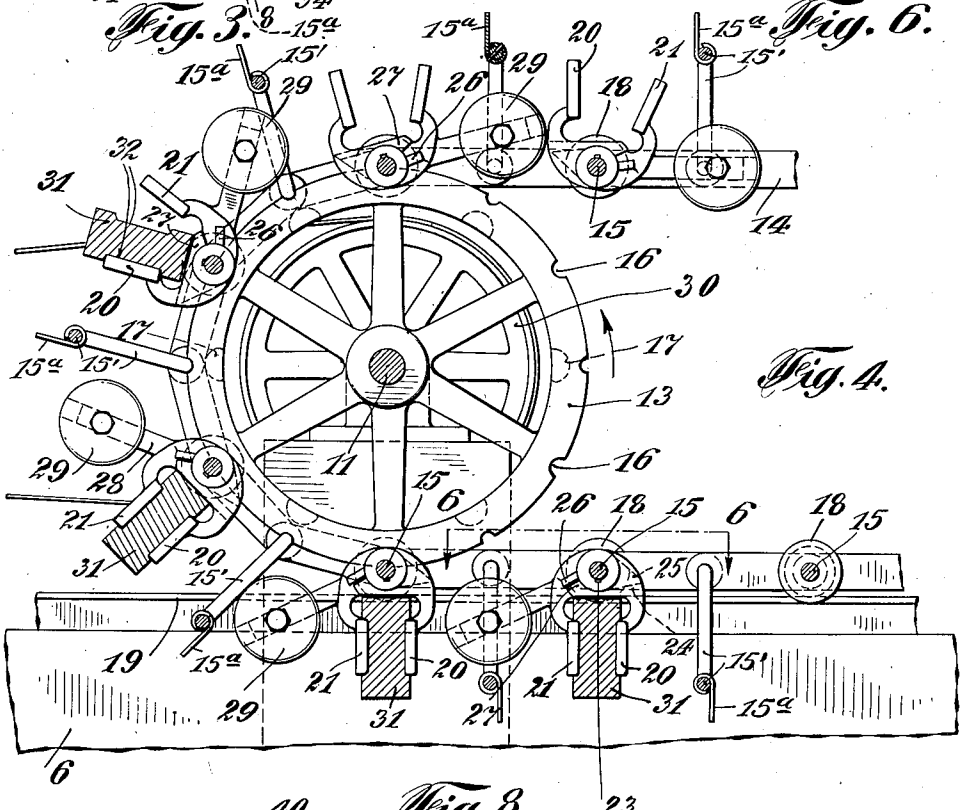

Fig. 4.

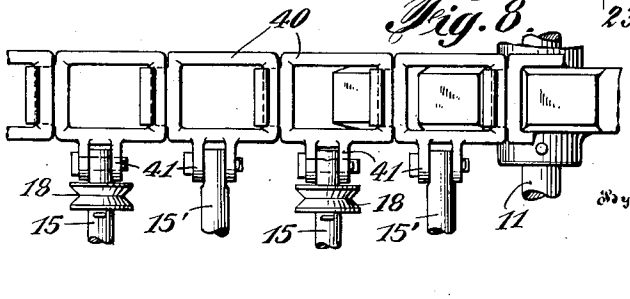

Fig. 8.

Inventor
John Francis Booraem
By C. P. Goepel
his Attorney

March 31, 1925. 1,531,839

J. F. BOORAEM

METHOD AND APPARATUS FOR ENAMELING BRICK OR TILE

Filed July 12, 1922 3 Sheets-Sheet 3

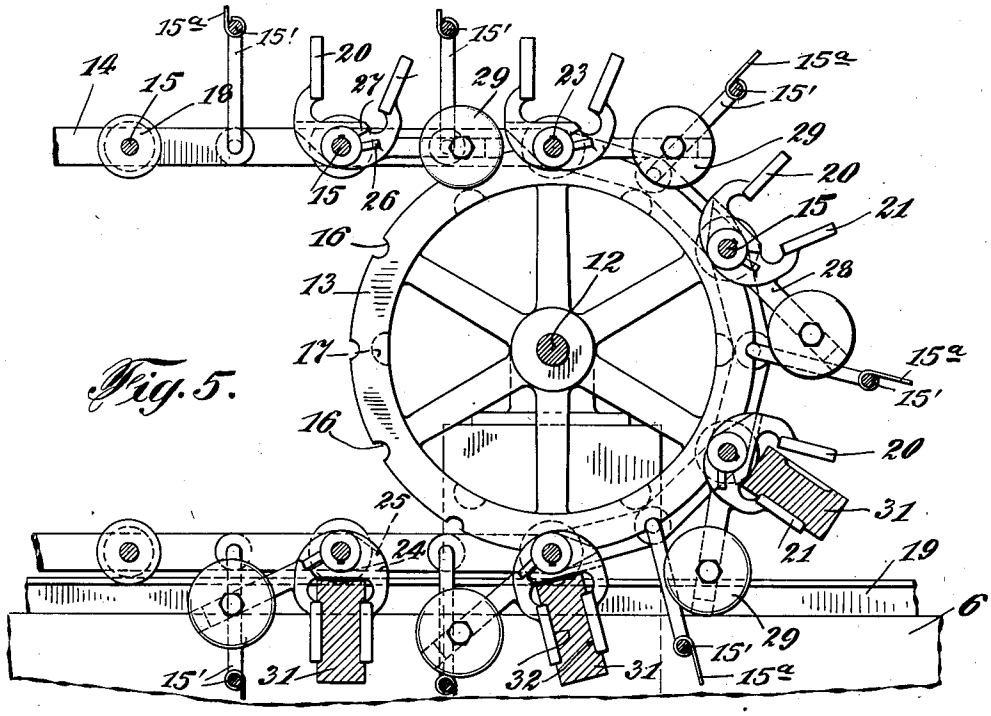

Fig. 5.

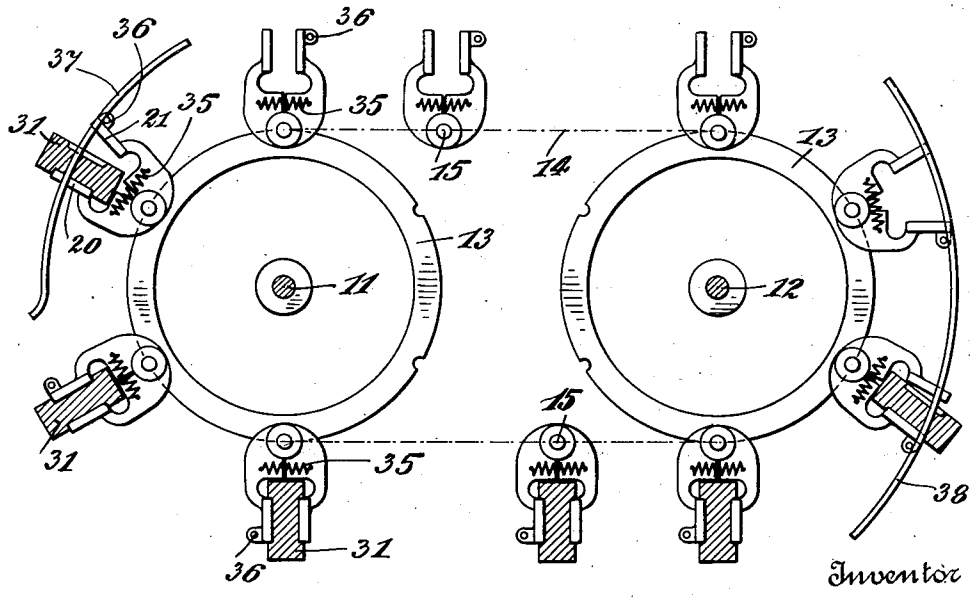

Fig. 7.

Inventor

John Francis Booraem

By C. P. Goepel

his Attorney

Patented Mar. 31, 1925. 1,531,839

UNITED STATES PATENT OFFICE.

JOHN FRANCIS BOORAEM, OF GREENWICH, CONNECTICUT.

METHOD AND APPARATUS FOR ENAMELING BRICK OR TILE.

Application filed July 12, 1922. Serial No. 574,506.

To all whom it may concern:

Be it known that I, JOHN FRANCIS BOORAEM, a citizen of the United States, and a resident of the city of Greenwich, county of Fairfield, State of Connecticut, have invented a certain new and useful Improvement in Methods and Apparatus for Enameling Brick or Tile, of which the following is a description.

This invention relates to a method and apparatus for enameling brick or tile and has for its primary object to provide means for automatically controlling the dipping or submergence of the brick in the liquid enamel bath so as to thereby limit the surface area of the brick covered by the enamel.

Heretofore it has been the practice to apply the enamel coating to one face of the brick by dipping the brick by hand into the enamel bath, one corner or edge of the brick being first inserted by a downward motion and the brick then drawn horizontally and upwardly and at the same time angularly turned as the brick emerges from the bath. Obviously, such a method of operation must be performed with great exactness and consumes considerable time, if a proper application of the enamel to the brick surface without waste thereof, is to be obtained. More often, however, due to inadvertence or carelessness in the manipulation of the brick, the enamel will be applied to the side and end surfaces of the brick which should remain bare or uncoated. Additional time and labor is subsequently consumed in scraping or removing the surplus enamel from the brick surfaces.

By means of my present invention, I aim to overcome the serious objections to the manually performed methods of enameling brick and to this end in one embodiment of the invention I provide an endless brick conveyor provided with brick clamping or holding devices at spaced intervals, together with means for causing the submergence of one edge of the brick to a definite depth in the enameling liquid as the bricks are successively moved through the enamel bath in the travel of the conveyor.

The invention also has for one of its important objects to provide means automatically controlling the brick clamping or holding devices so as to cause the same to properly clamp and hold the bricks at the feed end of the conveyor and to release the bricks at the opposite or discharge end of the conveyor so that they may be removed.

It is a further object of the invention to provide means for creating a circulation of the bath material in the direction of movement of the brick and at the same speed as the speed of movement of the brick so that agitation of the bath material and splashing of the same upon the brick surfaces which would necessitate a grinding or rubbing operation to remove the surplus material, is obviated.

With the above and other objects in view, the invention consists in the improved brick enameling apparatus and in the form, construction and relative arrangement of the several parts thereof as will be hereinafter more fully described, illustrated in the accompanying drawings and subsequently incorporated in the subjoined claims.

In the drawings wherein I have illustrated several practical and desirable embodiments of the invention and in which similar reference characters designate corresponding parts throughout the several views,

Figure 1 is a longitudinal section partly in diagram illustrating one embodiment of the apparatus;

Figure 2 is a top plan view;

Figure 3 is a transverse section taken on the line 3—3 of Fig. 1;

Figure 4 is an enlarged detail section of the brick conveyor at the feed end thereof;

Figure 5 is a similar view of the discharge end of the conveyor;

Figure 6 is a fragmentary plan view as indicated by the line 6—6 in Fig. 4;

Figure 7 is a semi-diagrammatic view showing a slightly modified form of the invention, and

Figure 8 is a fragmentary plan view illustrating a preferred type of conveyor.

Referring in detail to the drawings in which it is to be understood that the mounting and arrangement of the several movable parts of the apparatus as therein shown, is largely suggestive and does not constitute an essential feature of the invention, I have illustrated a narrow elongated base structure 5 having upstanding marginal flanges or walls 6. The bottom wall of this base structure is centrally formed with a longitudinally extending depression or trough 7,

preferably lined with a suitable material 8 and adapted to receive a bath of liquid enamel. The upper edges of the side walls or flanges 6 of the base 5 have their central portions at a lower elevation than the end portions thereof as indicated at 9, said central and end portions of the edges of said side walls being connected by the gradually sloping or inclined portions 10. The purpose of this construction will become apparent from the following description.

In suitable bearings at the opposite ends of the base 5 the transversely disposed shafts 11 and 12 respectively, are journaled. Upon each of these shafts spaced drive wheels 13 for the conveyor chains 14 are fixed. These conveyor chains are of the familiar link type, the spaced chains being connected to each other at intervals by the transverse rods 15, said rods being pinned to one link of the respective chains while the adjacent links have free pivoting movement with respect to each other. In this embodiment of my invention I have shown additional rods 15′ connecting the side chains between the rods 15 and having a fixed connection at their opposite ends to one of the link members of each chain. To each of the latter rods a blade or plate 15ª is suitably fixed for a purpose which will be hereinafter pointed out.

Each of the wheels 13 is provided with suitably spaced peripheral teeth, notches or recesses 16 to engage the rods 15 and 15′ whereby the conveyor chains are positively driven. Each wheel may also be provided with spaced lugs 17 to engage the chain links and relieve the connecting rods of excessive strains.

Each rod 15 is further provided at the opposite ends thereof and inwardly of the conveyor chains, with a loosely mounted peripherally grooved roller 18, or if desired, sliding shoes may be substituted for such rollers. These rollers or shoes are adapted to engage upon the guide tracks or rails 19 secured upon the upper edges of the base flanges or walls 6 so as to support the lower stretches of the conveyor chains against sagging.

Upon each rod 15 of the conveyor a brick holding and carrying device is provided. In one construction each of these brick holding devices includes a fixed jaw 20 and a movable jaw 21. Any conventional means may be employed for securing the fixed jaw to the rod but as herein shown, this jaw has a bifurcated end providing spaced portions 22 which are keyed or otherwise securely fixed upon the rod 15, as at 23. The bifurcation provides a stop shoulder 24 at the inner end of the portions 22. The other jaw is mounted for turning or rocking motion upon the rod 15 between the spaced portions 22 of the fixed jaw and is provided at one side of said rod with a lug 25 adapted to abut against the shoulder 24 and limit the movement of the jaw 21 to open position. At the opposite side of the rod 15 the jaw 21 is formed with a second stop lug 26 adapted for engagement with a shoulder 27 on the fixed jaw to limit the movement of the movable jaw towards its closed position. The movable jaw is provided with an arm 28 upon which a weight 29 is adjustably secured whereby said movable jaw is automatically moved by gravity to its closed and open positions at the opposite ends of the conveyor, and is enabled to securely grip the brick to be handled during its movement through the bath material and to subsequently release the brick for removal from the conveyor. It will be understood, of course, that suitable drive means is provided for the conveyor and for this purpose I have shown a belt drive wheel 30 on one end of the shaft 11.

In operation, as the upper stretch of the conveyor moves around the wheels 13 at the feed end of the conveyor, shown in Figure 4, the center of gravity of the weighted arm 28 and the movable jaw 21 is to one side of the vertical line of the axial center of the rod 15 so that the movable jaw is held in open position. While the movable jaw is in this position, a brick, as indicated at 31, is placed upon the fixed jaw. I have shown a conventional type of "indentured" brick having recesses or depressions in its opposite side faces, as at 32. These are not, however, essential to the successful operation of the machine, as one or both of the jaws may be provided with spaced pins to register with and engage in cylindrical cavities in the brick, or other suitable means might be employed. In the present disclosure, each jaw at its free end terminates in a rectangular plate for engagement in the depressions in opposite sides of the brick. As the movement of the conveyor continues and the brick holding devices with the brick on the fixed jaw approaches a position in horizontal alignment with the shaft 11, the weight 29 being positioned at the opposite side of a vertical line through the axis of the rod 15 causes the jaw 21 to move to its closed position so that the jaw plate thereof will engage in the depression or recess 32 in one side of the brick. The weight 29 is such as to overcome any tendency of the jaw 21 to be forced open by the weight of the brick suspended between the holding jaws as the bricks are carried along by the lower stretch of the conveyor.

The lower stretch of each conveyor chain moves under a guide wheel 33 mounted in any suitable manner above the opposite ends of the edge portions 9 of the base wall 6 so as to hold the rollers or shoes 18 supporting the ends of the rods 15 upon the tracks

19, said tracks in turn limiting the downward movement of the flexible chains and the connecting rods 15 under the weight of the bricks. Thus it will be apparent that as the brick holding devices suspending the bricks between the spaced conveyor chains, move in a definite and accurate manner down the longitudinally inclined portions of the tracks 19, the lower longitudinal edges of the bricks are submerged below the surface of the coating material or enamel bath, it being understood that this bath is kept at a predetermined level, by suitable automatic means or otherwise. The depth to which the bricks are thus submerged in the bath material can, therefore, be definitely controlled. Preferably, though not necessarily, I provide spaced upstanding longitudinal flanges 34 in the bath receiving trough which provides a central channel and outer side channels to permit of a return flow of the bath material, such material as is displaced by the submerged portions of the bricks being guided and directed by said flanges backwardly towards the entering end of the trough to return again through the central channel in the direction of movement of the bricks, thus setting up a substantially continuous longitudinal return circulation of the bath material.

The blades or plates 15ª arranged upon the conveyor intermediate of the brick holding devices depend from the lower stretch of the conveyor into the bath material and insure a longitudinal flow of the bath material at the same rate of speed as the speed of travel of the bricks through the bath. Other equivalent means might be provided for producing this movement of the bath material at the same speed as the travel of the bricks. This is a very important feature of the invention, as by creating a movement of the material at the same rate of speed as the brick, agitation or change of level of the fluid material between the spaced bricks is prevented, so that there will be no splashing or piling up of the liquid material at the forward end of the brick and the lowering or falling away of the liquid from the rear end of the brick. Thus the "lip" of bath material on the faces of the brick which in some cases it is necessary to subsequently remove by a grinding operation, is of exactly the same width all the way around the brick and is definitely limited by the depth of immersion of the brick which is determined by the constant level of the bath.

As the brick approach the inclined sections of the track rails 19 at the opposite end of the bath, they are, of course, moved upwardly and gradually rise above the surface of the bath. In this manner, it will be seen that the entire edge surface of the brick which it is desired to coat with the lining or enamel, is dipped vertically into the liquid enamel at the entrance end of the bath, and retained therein for a predetermined period of time which obviously might be varied as desired by changing the location of the inclined track sections and the position of the guide wheels. When the brick arrives at the egress end of the bath, it is also lifted vertically therefrom. Thus, as there is no angular or turning movement of the brick during its movement through the bath material, the side and end faces of the brick which it is not necessarily desired to coat with the enamel in the majority of cases, will be uniformly lipped so that the extent of rubbing or abrasive action subsequently applied by hand or special machines to remove the material from such brick faces is reduced to a minimum.

As the lining or enamel material is thus successively applied to one face of each brick they are moved upwardly around the discharge end of the conveyor as shown in Figure 5 of the drawings and in such movement the weighted holding jaws operate as before described but in a reverse direction to swing the jaws 21 to an open position as the holding devices successively arrive at the point where the counterbalance weight moves by gravity, which thus determines the place of discharge so that the attendant may easily remove the enameled brick and place the same upon a suitable rack for further treatment.

In Figure 7 of the drawings I have shown a slightly modified form of my invention wherein the stationary and movable jaws of the brick holding devices are normally retained in their relative closed position by means of a suitable spring 35 connected to the movable jaw. Each movable jaw at its free end is provided with a pin or stud 36. At the feed end of the conveyor these pins successively come into engagement with the upper end of a suitably formed cam 37 whereby the movable jaw is swung to an open position against the action of the spring 35 so that the brick can be placed upon the fixed jaw, as already explained. As the movement of the conveyor continues the pin 36 moves out of bearing engagement with the cam 37 so that the movable jaw is caused to securely clamp upon the opposite side of the brick owing to the contractile action of the spring 35. After the bricks have been carried through the enameling bath as before described, and as they are moved upwardly at the discharge end of the conveyor, the pins 36 on the movable holding jaws engage a second cam plate 38 so that said jaws are again opened against the action of the springs 35 to permit of the removal of the enameled brick.

While I have above described a certain specific construction of the brick conveyor,

in practice I will preferably use a conventional type of link chain conveyor such as that indicated in Figure 8 of the drawings and in which each of the side conveyor chains is composed of a plurality of similar separable links of general rectangular form, as indicated at 40, certain of the links at spaced intervals being provided with suitably formed brackets 41 to which one end of the transverse rod 15 extending between the similar side chains of the conveyor is suitably secured. Upon these rods the brick clamping or holding devices are mounted in the manner above described. It will be understood that conveyor chains of this type are used in connection with any familiar type of toothed sprocket wheels, the teeth thereof engaging through the open rectangular links. As these links are easily detachable, additional links may be inserted in each of the conveyor chains to lengthen the conveyor to any extent required.

From the foregoing description considered in connection with the accompanying drawings, the construction, manner of operation and several advantages of my present invention will be clearly and fully understood. It will be apparent that by the provision of the present apparatus, considerable time and labor may be saved in the coating or enameling of brick or tile over the present methods now generally used for this purpose. Production can also be greatly expedited with a more perfect application of the enamel to the brick surfaces resulting in a better preparation of the brick for the next step in the process of manufacture, and the elimination of excessive waste.

I have herein suggested several ways in which the opening and closing movements of the brick holding jaws may be automatically controlled. It is, however, to be understood that this feature, as well as the several other structural parts of the apparatus above referred to are susceptible of embodiment in various alternative constructions. Accordingly I reserve the privilege of resorting to all such legitimate changes in the form, construction and relative arrangement of the several parts as may be fairly embodied within the spirit and scope of the invention as claimed.

I claim:

1. In combination with a trough adapted to contain an enamel bath, means for moving articles through said bath, said means including spaced article supporting devices, and additional means movable with said article supporting devices for effecting a movement of the enamel bath material at the same rate of speed as the speed of movement of the articles through said material.

2. In combination with a trough adapted to contain an enamel bath, a conveyor extending longitudinally over the trough, brick holding devices on the conveyor to hold the bricks in suspended relation to one stretch of the conveyor with the brick partially immersed in the liquid enamel, and means carried by the conveyor for effecting a movement of the enamel bath material at the same rate of speed as the speed of movement of the brick through said material.

3. In combination with a trough adapted to contain an enamel bath, a conveyor extending longitudinally over the trough, brick holding devices on the conveyor to hold the brick in suspended relation to one stretch of the conveyor with the brick partially immersed in the liquid enamel, and members suspended from the conveyor between the brick holding devices to extend into the enamel bath and effect a movement of the bath material at the same rate of speed as the speed of movement of the brick through said material.

4. In combination with a trough adapted to contain an enamel bath, means for moving articles to be enameled through said bath, including spaced article holding devices, and additional means alternately arranged with respect to said article holding devices and movable therewith to effect a movement of the enamel bath material at the same rate of speed as the speed of movement of the articles through said material.

5. In combination with a trough adapted to contain an enamel bath, means for moving articles to be enameled through said bath, including spaced article holding devices, and blades alternately arranged with respect to the article holding devices extending into the bath material and movable with said devices for effecting a movement of the bath material at the same rate of speed as the speed of movement of the articles through said material.

6. In combination with a trough adapted to contain an enamel bath, parallel longitudinal guide flanges upstanding from the base of said trough, a conveyor mounted above the trough, means arranged at spaced intervals on the conveyor for holding bricks in suspended relation thereto with their lower faces immersed in the enamel bath during the longitudinal travel of the bricks between said guide flanges, and blades suspended from the conveyor and extending into the bath material between said guiding flanges to effect movement of the bath material at the same rate of speed as the movement of the brick therethrough.

7. In combination with a trough adapted to contain a coating material, means for moving articles to be coated with the materail through said trough in one direction while immersed in the material to a predetermined depth, and means for effect-

ing a movement of the coating material at the same rate of speed as the speed of movement of the articles through the trough.

8. The method of applying a coating material to the surfaces of articles which consists in moving the articles while in spaced relation to each other and immersed in a bath of the coating material to a predetermined depth and also causing a movement of the bath material between said articles in the same direction and at the same rate of speed as the speed of movement of the articles.

9. The method of enameling brick, which consists in suspending the brick above a liquid enamel bath and moving the suspended brick into and through said bath without change of angular position, with one face of the brick immersed in the liquid enamel to a predetermined depth and the other surfaces thereof extending above the level of the bath and maintaining such suspended relation of the brick to the bath throughout the movement of the brick between its point of immersion and the point of removal from the bath material.

In testimony that I claim the foregoing as my invention, I have signed my name hereunder.

J. FRANCIS BOORAEM.