Dec. 16, 1941. W. B. GRIFFITH 2,266,421

VALVE FOR SPRINKLER SYSTEMS

Filed July 26, 1940

FIG. 1.

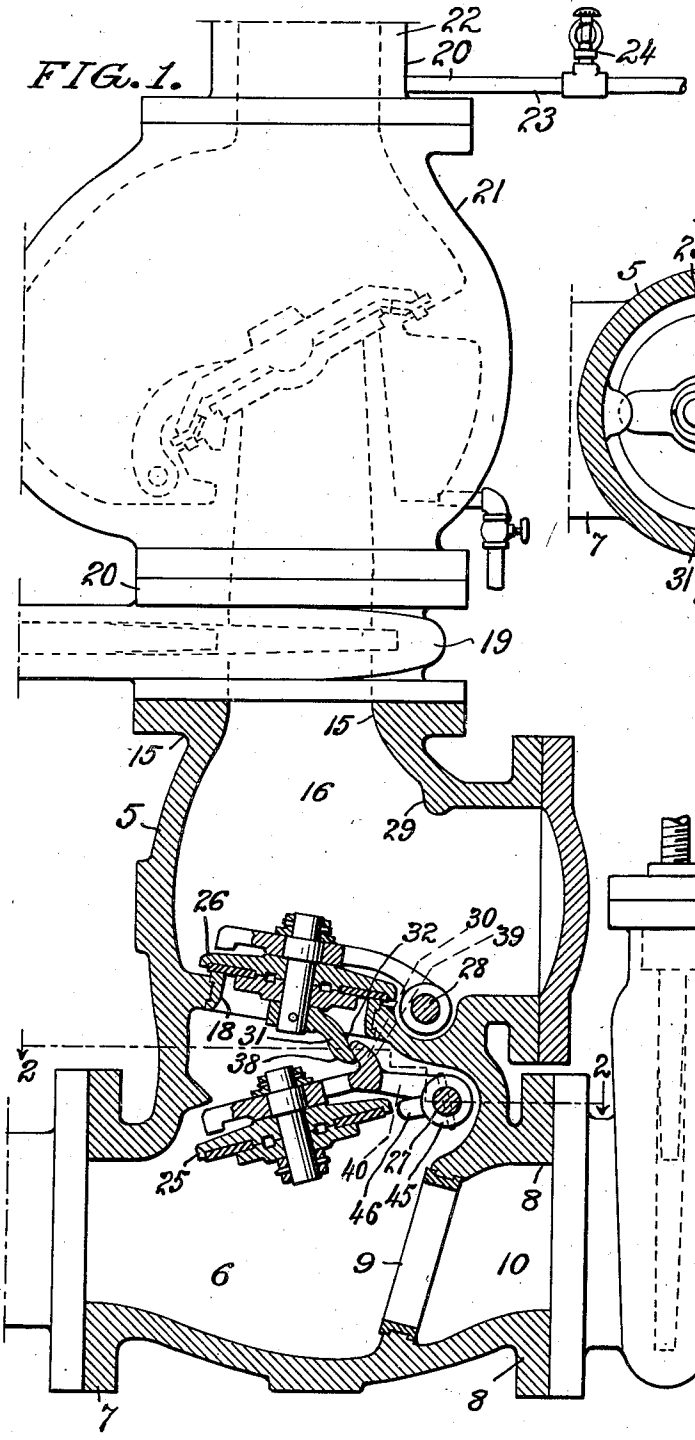

FIG. 2.

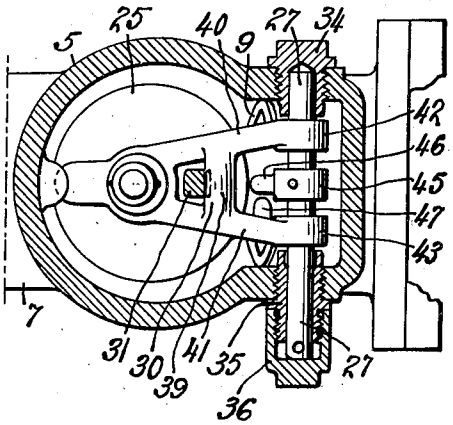

Inventor:
William B. Griffith
By F. DeWitt Goodwin Attorney

Patented Dec. 16, 1941 2,266,421

UNITED STATES PATENT OFFICE

2,266,421

VALVE FOR SPRINKLER SYSTEMS

William B. Griffith, Audubon, N. J.

Application July 26, 1940, Serial No. 347,658

11 Claims. (Cl. 277—21)

My invention relates to improvements in valves for automatic sprinkler systems for fire protection, and particularly relates to the means for supplying water to the systems.

The objects of my invention is to provide a novel structure having a single street main connection for water inlet supply, and two outlet connections; one of said outlet connections being arranged for supplying water to a building for general domestic purposes, and the other outlet connection for supplying water to a sprinkler system. Said structure including means for automatically closing the supply to the building for directing the entire flow of water to the sprinkler system when the latter becomes active in the event of a fire.

A further object is to construct a valve structure with a novel arrangement of clappers for controlling the flow of water through the outlets.

A further object is to provide a valve structure with means for supporting a valve clapper in an open position relatively to the outlet connection to the building, and means actuated by the flow of water through the outlet connection to the sprinkler system for releasing the valve clapper and closing the flow to the building.

A further object is to provide the valve structure with means by which the clappers may be reset after the sprinkler system has been in operation.

My invention provides means for reducing the service charges of water companies by eliminating the necessity of making two separate connections with the street main for supplying water to a building and to a sprinkler system.

The service charges, known as stand-by charges, for supplying water for sprinkler systems are frequently so high that said charges offset the savings in the reduced insurance rates effective by the installation of sprinkler systems. My invention provides means for supplying both the building and the sprinkler system through one inlet service connection with the street main, thereby eliminating the stand-by charge for the sprinkler system.

These together with various other novel features of construction and arrangement of the parts, which will be hereinafter more fully described and claimed, constitute my invention.

Referring to the accompanying drawing:

Fig. 1 is a vertical sectional view of my novel valve structure connected with a sprinkler system and showing a connection adapted for supplying water to a building.

Fig. 2 is a horizontal section on line 2—2 Fig. 1.

In the drawing in which like reference characters refer to like parts, 5 represents a structure, or valve casing, having an inlet chamber 6 and a supply water inlet connection 7. The casing 5 is provided with a main outlet connection 8 through which water is supplied to a building for domestic water service. An annular valve seat 9 surrounds a passage 10 extending from the inlet chamber 6 to the main outlet connection 8. A standard shut-off valve 12 is connected with the connection 8 and with a pipe 13, through which water is supplied to a building, not shown in the drawing.

The casing 5 is also provided with a sprinkler outlet connection 15, and a passage 16 which connects the inlet chamber 6 with said connection 15. An annular seat 18 is mounted upon the casing 5 and surrounds said passage 16. Said seat 18 is located in spaced relation to the seat 9.

The sprinkler system outlet connection 15 is connected with a standard shut-off valve 19, which in turn is connected with a closed sprinkler system 20. The valves 12 and 19 are normally open and are provided for purposes hereinafter described.

The sprinkler system 20 includes a valve 21, which may be of the dry pipe type, or it may be of the deluge, or alarm type, of any standard construction. The valve 21 is connected with a riser, or stand pipe 22, having distributing pipes 23 for supplying water to automatic sprinklers 24.

Within the casing 5 are clappers 25 and 26 which are rotatably mounted upon shafts 27 and 28, which in turn are rotatably mounted upon the casing 5. Said shafts are located relatively to the seats 9 and 18 so that the clappers will tend to move, by the action of gravity, toward their respective seats.

The clapper 25 is located within the chamber 6 between the seats 9 and 18, and is movable about the shaft 27 to a closed position upon the seat 9, for closing the main outlet connection 8, and to an open position adjacent to the seat 18, for engagement with the clapper 26, when the latter is positioned upon the seat 18.

The clapper 26 is supported upon the seat 18 when the sprinkler is closed and there is no flow of water through the outlet connection 15. When the sprinkler system is opened, in the event of fire, by the opening of the sprinkler 24 and the valve 21, the flow from the inlet chamber 6 through the passage 16 to the open sprinkler system will move the clapper 26 from the seat 18 to an open position against the stop 29 formed upon the casing 5.

The opening movement of the clapper 26 releases the clapper 25 and the latter will automatically close upon the seat 9 and shut off the flow through the main outlet connection 8, so that the entire water supply will be directed to the sprinkler system.

Said shafts 27 and 28 are relatively positioned

so that the closing movement of the clapper 25 is biased by the clapper 26 when the latter is supported upon the seat 18, and arranged for releasing the clapper 25 from the clapper 26 by a movement of the latter about the shaft 28 away from the seat 18, thereby permitting the clapper 25 to move to the closed position upon the seat 9, against which it is tightly held by the pressure of the water flowing through the chamber 6 to the open sprinkler system.

The clappers 25 and 26 are provided upon their adjacent faces with latching, or interlocking means, in the form of an upwardly extending lug 30 formed upon the clapper 25, and a depending lug 31 formed upon the clapper 26.

The shaft 27 is located in the inlet chamber 6 below the seat 18, and the shaft 28 is located within the passage 16 immediately above the seat 18, and said shafts are positioned relatively to each other so that the lugs 30 and 31 will interlock and hold the clapper 25 open when the clapper 26 is supported upon the seat 18. The shaft 27 is located relatively to the shaft 28 so that the lug 30 is movable eccentrically relatively to the shaft 28, whereby the movement of the clapper 25, toward the seat 9, is biased by the engagement of the lug 30 with the lug 31, thereby latching the clapper 25 open, relatively to the seat 9, and insuring a free supply of water through the main outlet connection 8 to the building when the sprinkler system is closed. The lug 31 has an engaging surface 32 which is concentric with the shaft 28 and will permit the lug 31 to readily withdraw from engagement with the lug 30 upon the movement of the clapper 26 away from the seat 18, and thereby release the clapper 25 from the lug 31 and allow the clapper 25 to close upon the seat 9 and close the main outlet connection 8, whereby the entire water supply will be directed through the outlet connection 15 to the sprinkler system.

After the sprinkler system has been in operation the clappers 25 and 26 may be reset to the position shown in Fig. 1, by first closing the shut-off valves 12 and 19, for stopping the flow of water, thereby allowing the clapper 26 to return automatically to its seat 18.

Means are provided for manually moving the clapper 25 from the seat 9 into latching engagement with the clapper 26. The shaft 27 extends without the casing 5, as shown in Fig. 2. Said shaft is loosely mounted in sleeves 34 and 35 secured upon the casing 5. One end of the shaft 27 extends through the sleeve 35. A cap 36 is detachably mounted upon the sleeve 35 and embraces the outer end of the shaft and is adapted to prevent leakage around the loosely mounted shaft 27. By removing the cap 36 the shaft may be rotated by a suitable tool, for rotating the clapper 25 from its seat 9 to the position shown in Fig. 1.

The lugs 30 and 31 are provided with rounded cam surfaces 38 and 39, which surfaces engage during the movement of the clapper 25 toward the clapper 26, and this movement causes the clapper 26 to lift from the seat 18 sufficiently to allow the lugs 30 and 31 to pass and the clapper 26 to reseat with the lugs interlocked, as shown in Fig. 1, for suspending the clapper in the open position relatively to the seat 9.

The clappers 25 and 26 are loosely rotatable upon the shafts 27 and 28 to insure the free movements of the clappers. The clapper 25 is provided with arms 40 and 41 having enlarged heads 42 and 43 which loosely embrace the shaft 27. The shaft 27 is mounted for rotary and axial movements in the sleeves 34 and 35. A collar 45 is secured upon the shaft 27 and said collar is provided with a radial pin 46. The arm 41 is provided with a pin or projection 47. The shaft 27 is adapted to be moved axially to engage the pins 46 and 47, so that by rotating the shaft 27 the clapper 25 may be moved from its seat 9 and interlocked with the clapper 26, as shown in Fig. 1.

When the cap 36 is replaced over the outer end of the shaft 27, said shaft must be moved axially into a position to release the pins 46 and 47 before the cap can be secured upon the sleeve 35 for preventing the leakage of water around the said shaft. By this arrangement the clapper 25 is free to rotate toward the seat 9 without rotating the shaft 27, thus insuring the free closing movement of the clapper 25.

After the clappers 25 and 26 have been arranged in the position shown in Fig. 1 as above described, the sprinkler system is placed under the system pressure for maintaining the valve 21 closed. The valves 12 and 19 are opened and the clappers 25 and 26 will remain in the position shown in Fig. 1, for directing the flow of water through the main outlet connection 8 for domestic supply purposes to a building. When the sprinkler system is brought into action by the opening of a sprinkler 24 and the valve 21, in the event of a fire, the clapper 26 will be moved from its seat by the flow of water through the outlet connection 15, and release the clapper 25 from the clapper 26 so that the clapper 25 will close the main outlet connection 8 and direct the entire supply of water to the sprinkler system.

I claim:

1. A valve casing forming a water supply inlet chamber, a main outlet connection upon the casing for domestic water supply to a building, a second outlet connection upon the casing for supply to a normally closed sprinkler system, a valve seat surrounding a passage from said chamber to said main outlet, a first clapper mounted for movement toward said seat for closing said main outlet, a second seat surrounding a passage between said chamber and said second outlet, a second clapper mounted for movement toward said second seat and movable from said second seat responsive to flow from said chamber toward said second outlet upon the opening of the system, and interlocking means upon said clappers engageable when the first clapper is in open relation to its seat and said second clapper is supported upon its seat for maintaining said main outlet open and arranged for releasing the first clapper by movement of the second clapper from its seat.

2. A valve structure having a water supply inlet connection, a main outlet connection, a valve mounted for movement within the structure arranged for automatically closing said main connection, valve engaging means adapted for holding the valve in the open position for maintaining said main connection open, said structure having a second outlet connection, and means responsive to flow through said second outlet connection arranged for releasing said valve from said engaging means.

3. A valve structure having a water supply inlet connection, a main outlet connection, a valve mounted for movement within the structure arranged for closing said main connection, said structure having a second outlet connection,

said structure having a passage connecting said inlet and second outlet connections, a clapper, means normally positioning said clapper within said passage and in engagement with said valve for maintaining the latter in the open position relatively to said main outlet connection, and means mounting said clapper for movement responsive to flow through said passage arranged for releasing the valve from the clapper and permitting the valve to close said main outlet connection.

4. A valve comprising a casing having an inlet chamber, a main outlet connection, a passage connecting said chamber with said main outlet, a clapper mounted for movement within the casing arranged for automatically closing said passage, a second outlet connection upon the casing, a second passage connecting said chamber with said second outlet, a second clapper, a support upon the casing normally positioning said second clapper within said second passage, means mounting said second clapper for movement from said support toward said second outlet by flow of fluid through said second passage, and means mounting said clappers for engagement of the first clapper with the second clapper when the latter is upon said support for biasing the closing movement of the first clapper and for releasing the latter upon a movement of the second clapper from said support.

5. A valve comprising a casing having an inlet chamber, a main outlet connection, a passage connecting said chamber with said main outlet, a clapper mounted for movement within the casing arranged for automatically closing said passage, a second outlet connection upon the casing, a second passage connecting said chamber with said second outlet, a second clapper within said second passage, means mounting said second clapper for movement from said second passage by flow of fluid through said second passage, and interlocking means upon said clappers engageable when the first clapper is open and the second clapper is positioned within said second passage and arranged for releasing said clappers upon the movement of the second clapper by flow through said second passage.

6. A valve comprising a casing having an inlet chamber, a main outlet connection, a passage connecting said chamber with said main outlet, a valve seat surrounding said passage, a clapper mounted for movement within said chamber and arranged for closing upon said seat, a second outlet connection upon the casing, said casing having a second passage connecting said chamber with said second outlet, a second seat surrounding said second passage, a second clapper, means mounting the second clapper for movement to and from said second seat, and said second seat located relatively to the first mentioned seat for supporting the second clapper in engagement with the first clapper for holding the latter in open relation to the first seat and for releasing the first clapper upon a movement of the second clapper from its seat responsive to flow of fluid from said chamber toward said second outlet.

7. A valve comprising a casing having an inlet chamber, a main outlet connection, a passage connecting said chamber with said main outlet, a valve seat surrounding said passage, a second outlet connection upon the casing, said casing having a second passage connecting said chamber with said second outlet, a second seat surrounding said second passage and located in spaced relation to the first seat, a first clapper located in said chamber, a shaft upon the casing about which the first clapper is rotatable to a closed position upon the first seat and to an open position adjacent to said second seat, a second clapper located between the second seat and said second connection, a second shaft mounted upon the casing about which the second clapper is rotatable to and from said second seat, interlocking parts upon said clappers arranged for maintaining the first clapper open when the second clapper is positioned upon the second seat, and said shafts relatively positioned for releasing said parts upon a movement of the second clapper away from said second seat.

8. A valve as claimed in claim 7 having lugs upon the adjacent faces of said clappers, and said shafts positioned relatively to said seats to engage said lugs and bias the movement of the first clapper toward its seat when the second clapper is closed upon its seat and release said lugs by a movement of the second clapper from its seat.

9. A valve comprising a casing having an inlet chamber, a main outlet connection, a valve seat surrounding a passage between said chamber and said main outlet, a second outlet connection, a second seat surrounding a passage between said chamber and said second outlet, said seats arranged in spaced relation to each other, a clapper located between said seats, a second clapper located between the second seat and said second outlet, shafts mounted upon the casing about which said clappers are rotatable to and from their respective seats, means extending without the casing arranged for manually rotating the first mentioned clapper from its seat toward said second seat, lugs upon said clappers, cam surfaces upon said lugs adapted to interlock upon the opening movement of the first clapper, and said shafts positioned relatively to said seats for engagement of said lugs for holding the first clapper open when the second clapper is upon its seat and for releasing the first clapper by a movement of the second clapper from its seat.

10. A valve comprising a casing having an inlet chamber, a main outlet connection, a valve seat surrounding a passage between said chamber and said main outlet, a second outlet connection, a second seat surrounding a passage between said chamber and said second outlet, said seats arranged in spaced relation to each other, a shaft mounted for axial and rotary movements upon the casing, a clapper rotatably mounted upon the shaft and arranged for normally closing upon the first mentioned seat, a second clapper mounted for movement within the casing and normally positioned upon said second seat, interlocking means upon said clappers, said shaft having an end portion extending without the casing, and a part upon said shaft movable axially with the latter into and out of engagement with the first clapper adapted for rotating the latter into a position for engaging said interlocking means.

11. A valve as claimed in claim 10 having a cap adapted for embracing the outer end of the shaft, means detachably mounting the cap upon the casing, and said cap having a closed end adapted for engagement with the outer end of the shaft for moving the shaft axially and disengaging said part from the first clapper.

WILLIAM B. GRIFFITH.