May 28, 1935. B. C. BECKER 2,002,624

SUCTION CLEANER

Filed Feb. 6, 1931 2 Sheets-Sheet 1

Fig. 1.

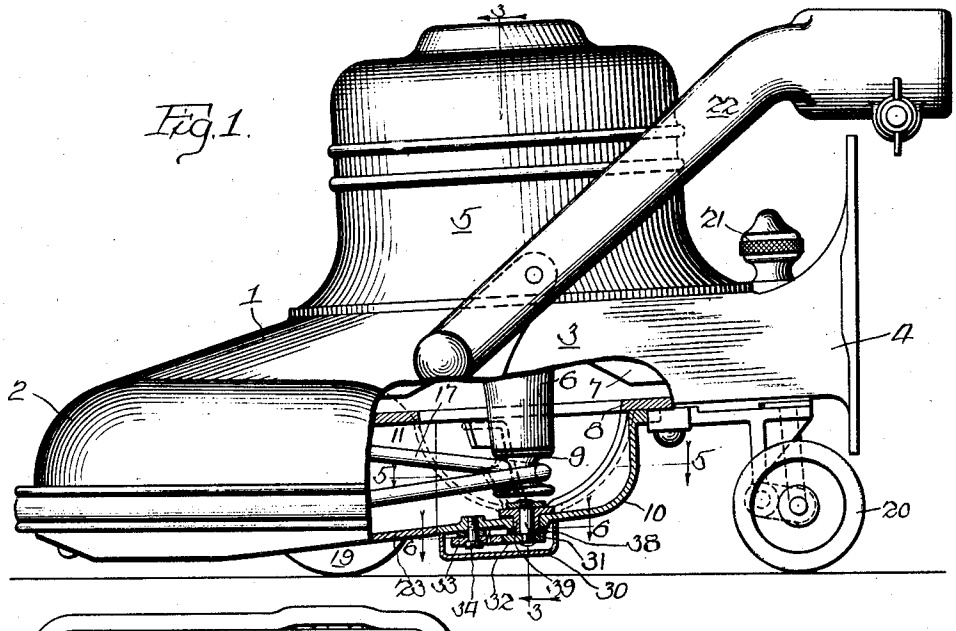

Fig. 2.

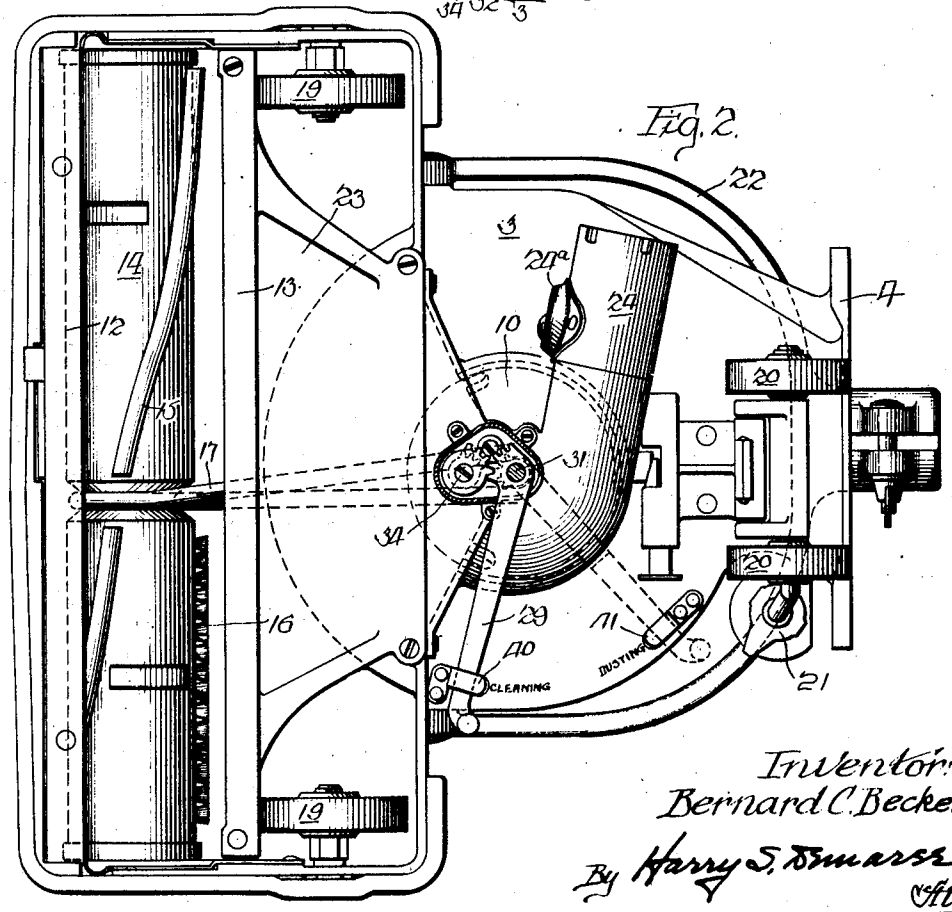

Inventor:
Bernard C. Becker
By Harry S. Bmarse
Atty.

May 28, 1935. B. C. BECKER 2,002,624

SUCTION CLEANER

Filed Feb. 6, 1931 2 Sheets-Sheet 2

Fig. 3.

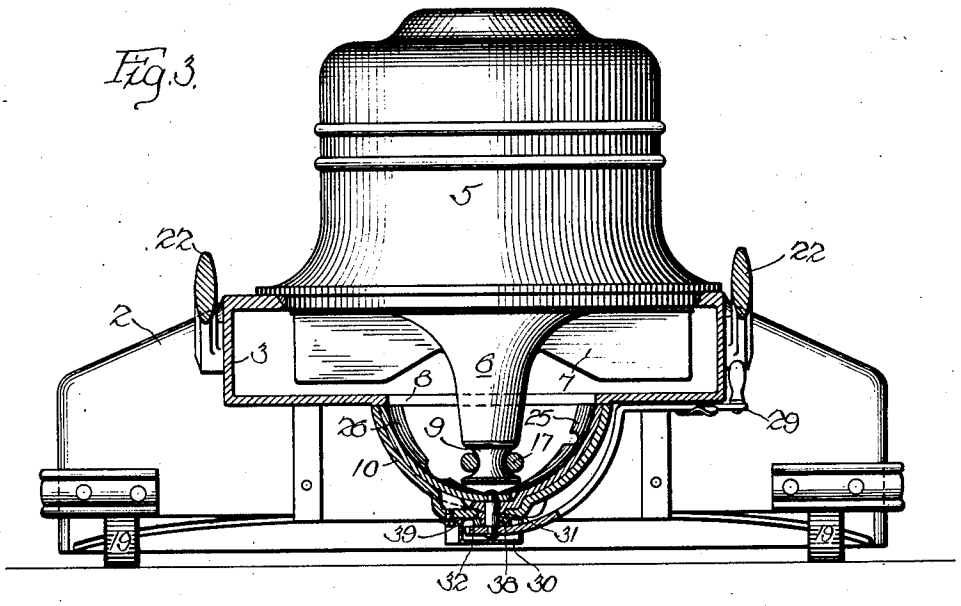

Fig. 4.

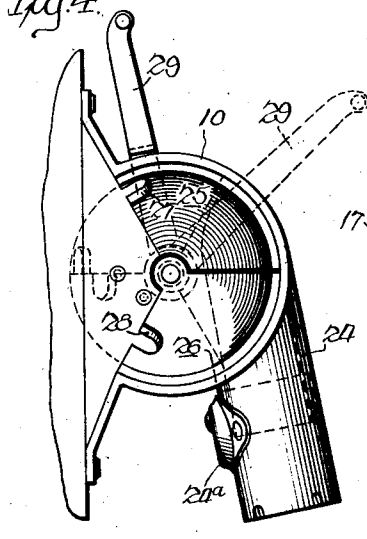

Fig. 5.

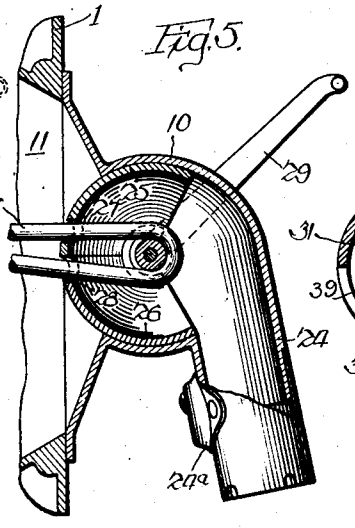

Fig. 6.

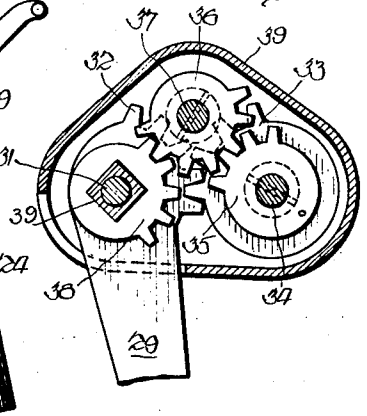

Inventor:
Bernard C. Becker:
By Harry S. Dunasse
Atty.

Patented May 28, 1935 2,002,624

UNITED STATES PATENT OFFICE

2,002,624

SUCTION CLEANER

Bernard C. Becker, York, Pa., assignor to The Hoover Company, North Canton, Ohio, a corporation of Ohio

Application February 6, 1931, Serial No. 514,009

8 Claims. (Cl. 15—9)

The present invention relates to suction cleaners in general and in particular to a new and improved permanently incorporated converter construction which functions to change the suction cleaner from a unit adapted for "on the floor" cleaning to a unit adapted to produce suction for use in dusting tools in "off the floor" cleaning.

It is an object of the present invention to provide a new and improved suction cleaner construction. It is a further object to provide, in a suction cleaner, a permanently incorporated converter mechanism which is manually operable and which functions to convert the cleaner from a unit adapted for "on the floor" cleaning to a unit adapted for "off the floor" cleaning. Still another object is the provision, in a suction cleaner, of a new and improved converter valve construction. A still further object is the provision, in a suction cleaner of the motor driven agitator type, of an improved permanently incorporated converter valve construction which is manually operable by the user. Other and more specific objects will appear upon reading the following specification and claims, considering in connection therewith the attached drawings.

In the drawings in which a preferred embodiment of the present invention is disclosed:

Fig. 1 is a side view of a suction cleaner embodying the present invention with certain parts broken away,

Fig. 2 is a bottom view of the cleaner shown in Fig. 1 with the bottom of the gear housing broken away,

Fig. 3 is a section upon the line 3—3 of Fig. 1,

Fig. 4 is a top view of the converter, comprising the valve and its casing, removed from the cleaner with the valve in the open position,

Fig. 5 is a section upon the line 5—5 of Fig. 1 showing the valve in the closed position,

Fig. 6 is an enlarged view of the gears taken upon the line 6—6 of Fig. 1.

The present invention is shown embodied in a modern motor driven suction cleaner which includes a main casing 1 comprising a nozzle 2, a fan chamber 3 and an exhaust outlet 4 which is adapted to receive a suitable dust receptacle. A motor casing 5 is mounted upon the main casing 1 immediately over the fan chamber 3 within which is positioned a driving motor, which is not shown, but the shaft 6 of which extends down thru the fan chamber 3, where it carries the suction-creating fan 7, thru the inlet or eye 8 of the fan chamber into the chamber formed by the valve or converter casing 10, which forms the rear end of the air passageway 11 extending between the front and rear lips 12 and 13 of nozzle 2 and the fan chamber, where it carries the driving pulley 9. A rotary agitator 14 is mounted within the nozzle 2 which comprises the rigidly carried beating elements 15 and a brush element 16, of which there may be more than one, which are adapted to contact the surface covering between the lips 12 and 13 of the nozzle. A driving belt 17 is provided which extends in the air passageway 11 from agitator 14 to the shaft 6 where it is operatively connected to the pulley 9 mounted at the lower end of that shaft. The suction cleaner is movably carried upon the supporting surface by means of front supporting wheels 18, 18 and rear supporting wheels 20, 20, the latter being provided with height-adjusting means 21 by which they may be adjusted relative to the cleaner for the purpose of raising or lowering the nozzle mouth, as defined by the lips 12 and 13, relative to the surface covering as is often required when the cleaner is changed from one type of rug or carpet to another. A handle 22 is pivotally attached to the cleaner, and to the casing 1 in particular, by which the machine may be propelled by the operator.

In the usual suction cleaner of the motor driven type, exemplified by the general outlines of the cleaner shown in the drawings, the air passageway 11 leading from the nozzle 2 to the fan chamber 3 is completed, at its rear end adjacent the inlet or eye 8 of the fan chamber, by a simple shell-like member or housing which conforms at its forward end to the rear end of the passageway 11, as defined by the permanently carried walls of the casing 1 and the bottom plate 23. In the use of the machine upon the surface covering this housing serves merely to direct the dirt-laden air from the nozzle 2 to the fan chamber 3 thru the inlet 8 thereof, it being suitably shaped to perform that function and being open at its upper face. If the operator desired to convert the machine to a suction-creating unit for use with dusting tools it was necessary to remove this detachable housing member and to position in its place a converter member which was provided with an opening or conduit to which the dusting tools could be attached and which directed the entire draft of the suction-creating fan into that conduit, sealing the nozzle 2 therefrom. It would usually be necessary to remove the driving belt 17 in the positioning of this converter member as it, in the ordinary embodiments, would closely conform to the periphery of the inlet 8 of the fan chamber. A certain amount

of objectionable work would be required to convert the machine, with the aforementioned type of construction, thru the necessity of tilting the machine on its side, removing one member, detaching the belt, and the installation of a second member. In a suction cleaner constructed in accordance with the present invention it is unnecessary to remove any of the parts embodied in the cleaner in its transformation from one type of cleaning unit to another, nor is it necessary to remove the driving belt from the driving pulley. It is only necessary to attach or detach the tubular hose of the dusting tool to or from the conduit which is carried by the converter casing, the flow of air into the tool and the sealing of the fan chamber from the nozzle being accomplished by the permanently incorporated converter or valve means which will be hereinafter more fully set forth.

In the cleaner constructed in accordance with the present invention, the converter or valve casing **10** conforms, at its forward end to that part of the air passageway **11** formed by the main casing **1** and the bottom plate **23** forward of the inlet **8**. The main body portion of casing or housing **10** is semi-spherical and there is provided a rearwardly directed conduit **24** which opens thereinto. Within the casing **10** and closely conforming to the contour of its walls are two valve members **25** and **26** which are shaped as sectors from the surface of a sphere and which are adapted to make line contact, at both their forward and their rearward edges, being rotatable about a vertical axis. In their conduit-sealing position the valve members are positioned as shown in full lines in Figures 1, 3 and 4, it being clear that they overlie the inlet of the conduit into the casing completely sealing the conduit from the inlet **8** of the fan chamber but permitting unhindered access to the air entering from the nozzle **2** by way of air passageway **11**. With the valve members **25** and **26** rotated until they contact upon their forward edges, the air passageway **11**, forward of the inlet **8** of the fan chamber, is completely sealed therefrom, as is clearly shown in Figure 5, and the conduit **24** is directly connected thru the casing **10** to said fan chamber. To permit the valve segments to make line contact when in their forward or nozzle-sealing position cut-away portions or recesses **27** and **28** are provided within which the sides of the driving belt are positioned in a manner which in no way interferes with the transmission of power to the agitator from the pulley.

The operation of the valve, comprising the members **25** and **26**, by the operator is made possible by the provision of a suitable handle **29** which is extended, from its inner end directly below the valve casing **10**, out beside the fan chamber **3** where it can be easily grasped by the operator and moved between its two positions. The handle **29** extends, at its inner end, within the gear casing **30** where it is rigidly connected to a centrally located vertical pin **31** which is rigidly connected at its opposite, or upper end, to the valve segment **26**. The movement of the handle **29**, therefore, results in its rotation about the pin **31** as an axis and in the accompanying rotation of valve member **26** inside the casing. To accomplish the rotation of valve member **25** in a direction opposite to that of valve member **26** a segmental gear **32** is provided on the end of handle **29** which meshes with another segmental gear **33** carried upon a spaced pin **34** and which connects, thru a gear train comprising the segmental gear **35**, also mounted upon pin **33**, a coacting segmental gear **36** mounted upon a third pin **37**, with the segmental gear **38** which rotates about pin **31** in a direction opposite to that of the gear **32** on the handle **28**. This last gear **38**, is rigidly carried by or formed on a sleeve **39** which encloses and supports the pin **31** and which is itself rotatably supported by the bottom of casing **10** and is rigidly attached to, or formed integrally with, the valve member **25**.

To transform a suction cleaner constructed in accordance with the present invention, from a unit adapted for "on the floor" cleaning, in which the suction is directed to the main nozzle of the cleaner, to a unit adapted for "off the floor" cleaning, in which the draft of the suction-creating means is directed to a second passageway or conduit for the purpose of making possible cleaning at a distance from the cleaner proper, it is only necessary for the operator to move the valve-operating handle **29** from the position indicated on the underside of the cleaner by the word "Cleaning", where it has been resistingly held by suitable spring means **40**, to an angularly spaced position, indicated by the word "Dusting", where it will also be resistingly retained by suitable spring means **41**. This rotation of the converter-actuating arm results in the rotation in opposite directions of the valve members **25** and **26** within the valve casing **10** thru the mechanism aforedescribed. The valve is moved from its original position, that shown in Figure 4 in which it sealed conduit **24** from the fan chamber, to a new position as shown in Figure 5. In this latter position the air passageway **11** leading from the main nozzle **2** is entirely sealed, thereby sealing the nozzle from the fan chamber and preventing the passage of air therebetween. The conduit **24**, however, is directly opened thru the casing **10** to the fan chamber **3** in this new position and the operator need only secure the cleaner end of the dusting tool, which will be preferably of the tubular flexible type, to the conduit **24** by the suitable securing means **24a**, and the suction created by the cleaner can be used at the nozzle end of the dusting tool for the removal of foreign matter from curtains, drapes and other articles for which the suction cleaner proper is not adapted.

According to the present invention the agitator **14** continues to revolve though the suction is no longer directed toward the nozzle **2**. This continued rotation of the agitator performs no harmful effect and places but a slight load upon the driving motor as the agitator does not contact the surface covering, there being no suction at the nozzle **2** to lift said covering against the lips **12** and **13** thereof, and the only loss is the friction loss in the bearings and in the transmission means. To reconvert the cleaner to a unit adapted for "on the floor" cleaning the operator need only return the handle **29** to its original position and disconnect the dusting tool from the conduit **24**.

I claim:

1. In a suction cleaner, a body including a nozzle, a fan chamber and an air passageway therebetween, said passageway being formed as a valve chamber at one point, a conduit open to said air passageway at said valve chamber, an agitator in said nozzle, power-transmitting means in said passageway extending from the junction of said passageway and said fan chamber to said agitator, a valve comprising a plurality of elements rotatable about a common axis at an angle to said power-transmitting means at the junction

of said air passageway and said conduit, means to rotate manually said elements in opposite directions that is towards and from said power-transmitting means, said means comprising an adjustable handle directly connected to one of said elements, and a series of gears connecting said handle to the remaining element.

2. In a suction cleaner, a body including a nozzle, a fan chamber and an air passageway therebetween, a conduit open to said air passageway, an agitator in said nozzle, a driving shaft extended from said fan chamber into said air passageway, a power-transmitting belt connected to said shaft and to said agitator and positioned in said air passageway, a rotatable valve positioned in said air passageway, said valve comprising a plurality of cooperating sections independently mounted on a common axis, said valve sections being provided with recesses and means to rotate said valve sections in opposite directions of angular advance to selectively seal said nozzle or said conduit from said fan chamber, said power-transmitting belt seating in the recesses in said valve sections with the valve in the nozzle-sealing position.

3. In a suction cleaner, a body including a nozzle, a fan chamber, an air passageway therebetween, and an air conduit open to said passageway, a drive shaft extended from said fan chamber into said passageway, a power-transmitting belt connected to said shaft and extending at substantially right angles thereto into said passageway, a rotatable valve positioned in said passageway and extended in the direction of said shaft in spaced relation thereto at its point of belt contact, said valve being formed of a plurality of sections movable toward and from said belt from the opposite sides thereof and adapted to make sealing contact at said belt, said valve sealing said passageway when positioned at said belt and sealing said conduit in a second position, and manually operable means to actuate said valve.

4. In a suction cleaner, a body including a nozzle, a fan chamber, an air passageway therebetween, and an air conduit open to said passageway, a drive shaft extended from said fan chamber into said passageway, a power-transmitting belt connected to said shaft and extending at substantially right angles thereto into said passageway, a valve rotatable about an axis extended in the same direction as said shaft and shaped to extend longitudinally along said shaft past the point of belt contact therewith, said valve formed of cooperating sections movable in opposite directions of rotation and adapted to approach said belt from opposite sides thereof to close said air passageway, and manually operable means to move said valve sections, said valve closing said conduit in one position.

5. In a suction cleaner, a body including a nozzle, a fan chamber, an air passageway connecting said nozzle to said chamber, a valve chamber at the junction of said passageway and chamber, an air conduit open to said fan chamber through said valve chamber, a drives shaft extended from said fan chamber into said valve chamber, a power-transmitting belt extended from said shaft into said passageway, a valve rotatable about an axis extended in the same direction as said shaft comprising sectors movable in sealed relationship with the walls of its chamber to passageway-closing or to conduit-closing position, said sectors moving to passageway-sealing position from opposite sides of said belt, there being manually-operable means to move said valve carried by said body.

6. An accessory for a suction cleaner of the type including a nozzle, a fan chamber, an air passageway from said nozzle to said fan chamber ending short thereof, a drive shaft extended from said fan chamber through the eye thereof, a belt connected to said shaft and extended through said passageway to said nozzle and into operative relationship with an agitator therein; comprising a removable housing member connecting said passageway to said fan chamber and formed with a conduit opening interiorly thereto, a rotatable valve positioned in and mounted on said housing and rotatable about said shaft as an axis, said valve being movable to seal said passageway or said conduit from said fan chamber, and manually operated means on said housing member connected to and adapted to rotate said valve.

7. An accessory for a suction cleaner of the type including a nozzle, a fan chamber, an air passageway from said nozzle to said fan chamber ending short thereof, a drive shaft extended from said fan chamber through the eye thereof, a belt connected to said shaft and extended through said passageway to said nozzle and into operative relationship with an agitator therein; comprising a housing member connecting said passageway to the eye of said fan chamber and formed with a conduit opening interiorly thereto, said housing enclosing the junction of said shaft and said belt, a valve comprising sections rotatable about said shaft in opposite directions to close said passageway or said conduit from the eye of said fan chamber, and manually operable means carried by said housing connected to and adapted to rotate said sections in opposite direction.

8. In a suction cleaner, suction-creating means, a nozzle, a passageway connecting said nozzle to said means, a surface covering agitator in said nozzle, power-transmitting means extended through said passageway to said agitator, a drive shaft extended into said passageway to which said power-transmitting means are connected, a second passageway open to said first-mentioned passageway and so to said suction-creating means at the point of connection of said shaft and said power-transmitting means, a valve element rotatable about an axis substantially coincident with the axis of said drive shaft, said element adapted to close said second passageway and movable toward said power-transmitting means to partially close said first-mentioned passageway, and cooperating means to assist said element in closing said first-mentioned passageway positioned upon the opposite side of said power-transmitting means from said element.

BERNARD C. BECKER.