March 18, 1941. H. W. BUELOW 2,234,960

BUILDING FRAME STRUCTURE

Original Filed Sept. 20, 1935

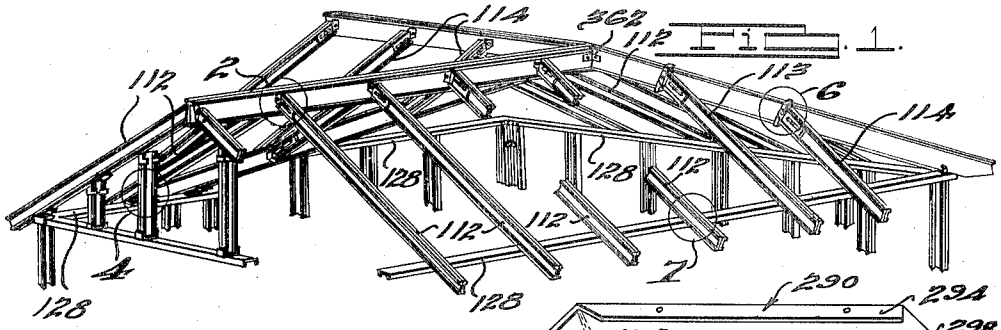

FIG. 1.



FIG. 2.

FIG. 3.

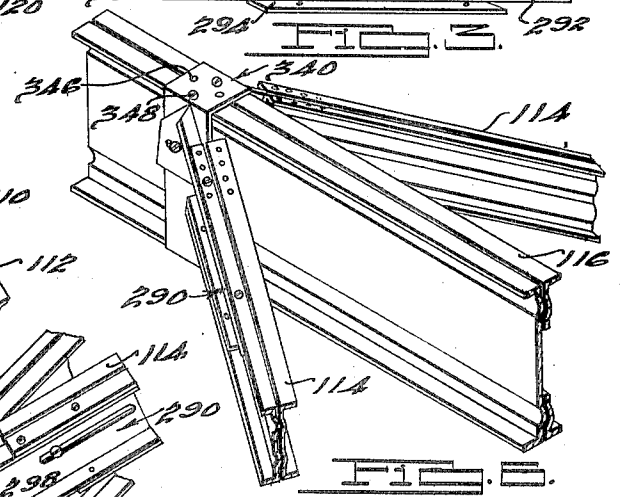

FIG. 6.

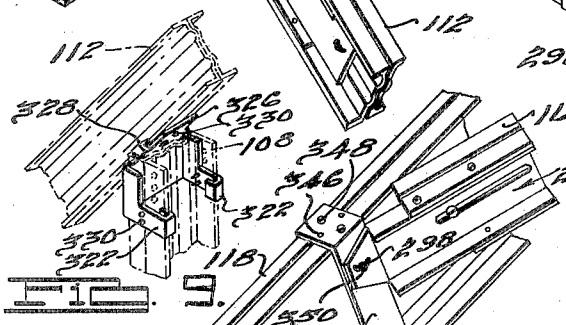

FIG. 9.

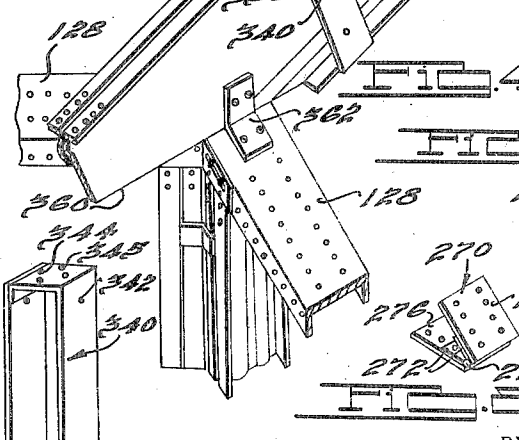

FIG. 4.

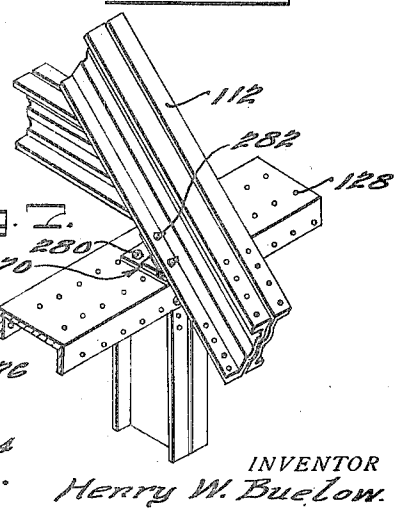

FIG. 7.

FIG. 8.

INVENTOR
Henry W. Buelow.

BY
Harness, Dickey & Pierce.
ATTORNEYS.

Patented Mar. 18, 1941

2,234,960

UNITED STATES PATENT OFFICE

2,234,960

BUILDING FRAME STRUCTURE

Henry W. Buelow, Detroit, Mich.

Original application September 20, 1935, Serial No. 41,364. Divided and this application October 3, 1938, Serial No. 233,013

6 Claims. (Cl. 108—1)

The present invention relates to building frame structures and particularly to the provision of a metal building frame structure embodying improved structural shapes and improved constructions of attaching elements for such shapes; and is a division of applicant's co-pending application, Serial No. 41,364, filed September 20, 1935.

A principal object of the present invention is to provide a metal framing structure for buildings and an improved method of erecting the same.

It is also an object of the present invention to provide a metal framing structure embodying members which may be assembled to produce a variety of desired architectural features.

It is also an object of the present invention to provide a framing structure embodying structural members formed of one or more standard structural shapes and arranged for connection by attaching elements formed in one or more standard shapes.

It is also an object of the present invention to provide improved structural member sections for use in metal framing and to provide improved attaching elements for use therewith.

It is also an object of the present invention to provide for use in a metal framing structure or the like an improved method and structure for assembling structural members together utilizing brackets having clamping portions adapted to fit over a structural member which structural member may thereafter be expanded to form a tight fit thereof within the bracket.

It is a further and more specific object of the present invention to provide improved methods of and means for forming connections between the rafters and associated parts of a building structure, including the provision of improved attaching elements for forming such connection.

With the above as well as other and more detailed objects in view, which appear in the following description and in the appended claims, preferred but illustrative embodiments of the invention are shown in the accompanying drawing, throughout the several views of which corresponding reference characters are used to designate corresponding parts.

Figure 1 is a view in perspective of a framing structure embodying the present invention and illustrating several of the architectural features available in the practice thereof;

Fig. 2 is a detailed view of an illustrative ridge connection, based upon Fig. 1;

Fig. 3 is a detailed view of a connecting element, hereinafter called a rafter plate;

Fig. 4 is a detailed view of an illustrative valley rafter connection, based upon Fig. 1;

Fig. 5 is a detailed view of a connecting element, hereinafter called a rafter sleeve;

Fig. 6 is a detailed view of an illustrative hip rafter connection based upon Fig. 1;

Fig. 7 is a detailed view of an illustrative hinged rafter and channel plate connection based upon Fig. 1;

Fig. 8 is a detailed view of a connecting hinge, and,

Fig. 9 is a detail view of an illustrative rafter and gable jack stud connection.

In accordance with the invention disclosed in the above identified patent application Serial No. 41,364, a complete framing structure for homes, as well as for a wide variety of other structures, may comprise a relatively few standard shapes. These structural shapes may be erected through use of a relatively few, economically formed attaching elements.

The main structural members, which may be of I, T, or channel section, are preferably of the type disclosed in Patent No. 1,900,541, granted March 7, 1933, on application Serial No. 548,134, filed July 1, 1931, by the present applicant and George Buelow. As described and claimed in that patent, these members, which may be formed of either single or double web construction, are characterized as being formed of two angle or channel members arranged in back-to-back relation and rigidly secured together with the opposed and adjacent faces in spaced relation. These opposed and ajacent faces are corrugated in the direction of their length, the corrugations of one being complementary to the corrugations of the other. Those portions of members which are opposed and adjacent each other are of rigid and self-supporting character and they are so spaced with respect to each other as to form between them a sinuous slot of such character that when a nail or similar fastener of the character intended for use therewith is driven into the slot between the members in a direction transverse to the slot, the nail or fastener is caused to bend and to approximately follow the sinuosity of the slot to thereby positively fix the nail or fastener in position with respect to the members. With this construction, a substantial portion of the erection may be accomplished by simply nailing parts together in the manner now customary in the erection of wooden frame structures.

The improvements of the present application are directed primarily to the roofing features although certain of the improvements herein

claimed are applicable elsewhere throughout a framing structure, such for example, as in connection with stair stringers or the like. The disclosure of the present improvements in connection with roofing features is, therefore, to be regarded in an illustrative and not in a limiting sense.

Referring generally to Fig. 1, in accordance with the illustrated embodiment of the present invention, the roofing features include two gable roofs intersecting in a valley, and a hip roof.

As illustrated, the rafters 112 are preferably constructed of I-section in accordance with said Patent No. 1,900,541 and are hingedly connected to the upper story channel plates 128. This form of connection is advantageous in that it permits flexibility in the course of the erection, and, with a single type of connecting hinge, enables the erection of structures having any desired roof pitch. It will be understood that roofing material may be either nailed or otherwise secured directly to the rafters in the usual manner.

Referring particularly to Fig. 8, an illustrative hinge element 270, comprises the two plates 272, pivotally connected together by a conventional pin 274. To provide an enlarged connecting surface, the hinge elements 272 are secured in any desired manner to plates 276, which are suitably apertured at a number of points, to provide for connection to channel plates of various dimensions. Referring more particularly to Fig. 7, hinges 270 are screwed to channel plates 128 by screws 280, and are correspondingly bolted to the flanges of rafter 112 by screws 282. The rafter hinges are preferably taken apart before erection, one part being bolted to the rafters while supported on horses, the other half of the hinge being bolted to a rafter plate. The erection may then be completed in a simple and speedy manner by driving pins through the hinge sections.

Referring particularly to Figs. 1, 2 and 3, the other ends of certain of the rafters 112 are connected to a ridge piece 120 by rafter plates 290. Rafter plates 290 are preferably stamped from a plane piece of metal, and comprise a flat central section 292, and two flanged sections 294. The main section 292 is provided with an elongated slot 296, and relatively short arcuate slots 298 are provided in the end sections. One end section 300 is disposed to be bent along any of a plurality of dotted lines 302 to accommodate the rafters to different pitches. Preferably, this bending is accomplished in the course of the erection process, and as will be understood, the degree of bending between the illustrated position and a position ninety degrees therefrom, is determined by the use to which the bracket is put. In connecting a rafter to a ridge piece, as shown in Fig. 2, a ninety degree bending of end section 300 is required.

Referring further to Fig. 2, rafter plate 290 is secured to rafter 112 by one or more bolts 304, which pass through the elongated slot 296 and through corresponding openings formed in the web of rafter 112. The connection thus afforded is adjustable, to compensate for any slight inaccuracy which may occur in the rafter lengths. Plate 290 is secured to ridge piece 120 by a bolt 306, which passes through a slot 298, which is made arcuate to adapt the plate to different pitches, and through a corresponding opening in piece 120. It will be understood that a single connecting bolt 306 serves to connect corresponding plates 290 on each side of piece 120. The spacing between the rafter plate flanges 294 conform to the spacing between the flanges of the rafters 112, so that, if desired, plates 290 may be further secured to the rafters 112 by screws 310, which pass through the flanges of each rafter 112 and plate 290, respectively, and by a screw 312, which passes through the web of rafter 112, and through the corresponding arcuate slot 298 in plate 290. The openings for screws 310 may be made after the parts are adjusted. It will be noted that plates 290 are symmetrical and so may be used either right or left handed, or stated in another way either end of each plate may be bent over for connection to the associated ridge plate, depending upon which side of the associated rafter it is desired to secure to the body of the rafter plate.

As shown in Figs. 4 and 6, jack rafters 114 are connected to hip and valley rafters 116 and 118, respectively, by rafter plates 290 as described in connection with Fig. 2 and by rafter sleeves 340, shown in detail in Fig. 5. Referring to the latter figure, each rafter sleeve 340 is formed in the shape of a rectangle, from a plane sheet of metal, and is provided with suitably spaced openings 342 in the side thereof, and 344 and 345 in the ends thereof. Referring more particularly to Fig. 4, sleeve 340 is slid over the end of valley rafter 118, and is secured in place thereon, either by screws 348 which pass through the end openings 344 and through the flange of rafter 118, or, and preferably, by nailing through the openings 344 into the sinuous slot in the rafter flange. The latter action spreads the rafter flanges and locks the sleeve in place thereon. Rafter plate 290 is in turn secured to sleeve 340 by a bolt 350 which passes through the arcuate slot 298 in the end section of plate 290. In making connections of this character, it will be noted that the end section 300 of each plate 290 is not bent to the full ninety degree position shown in Fig. 2.

Referring particularly to Fig. 6, jack rafters 114 are similarly connected to hip rafters 116, through sleeves 340 and plates 290.

Referring again particularly to Fig. 4, valley rafter 118 is mitred along the line 360 to accommodate it to the horizontal surface of the cap plate 128, and is secured to the latter by one or more angle clips 362. As will be understood, the connection of hip rafters to the cap plates is accomplished in a similar manner, and as shown in Fig. 1 such angle clips are also employed to connect the intersecting ends of ridge plate 120 and of hip rafter 116.

Referring particularly to Figs. 1 and 9, it will be noticed that gable jack studs 108 extend between the sill member 128 and the rafters 112. The gable pack studs are suitably secured to the member 128 in the manner described in more detail in the above identified parent application, and are secured to the rafters by means of rafter clips 320. Rafter clips 320 are preferably stamped from plane blanks, and include a U-shaped portion having legs 322 and a back 324; and an angularly disposed section 326 which extends upwardly from the back 324, and is provided with ears 328. Nailing openings 330 are provided in the legs 322 and in the extension 326. In erecting gable studs 108, the rafter clips 320 are somewhat loosely applied thereto by bending the ears 328 around the flanges of stud 108. After the studs 108 are secured to the member 128, each rafter clip 320 is nailed to a rafter 112, the nails passing through openings 330 and

into the flange slots, as described in connection with the other figures. Thereafter, legs **322** are nailed to studs **108**, the nails passing through the corresponding openings **330** into the slots in the flanges of the studs, separating the flanges and tightening the joint. Prior to the nailing the clip may be slid along stud **108** to compensate for any inaccuracy in the length thereof.

It will be appreciated that the herein described construction is extremely simple in construction and in erection. It will also be understood that various modifications may be made in the form and arrangement of the various parts without departing from the invention.

What I claim is:

1. A connection between a ridge piece and a channel shaped rafter which utilizes a rafter plate comprising a channel shaped bracket having a parallel sided mid section and an integrally formed bent over end section, a connection between said end section and said ridge piece, and a connection bringing said mid section parallel to and in nested relation within said rafter.

2. A connection between a channel shaped rafter and a channel shaped hip or valley rafter comprising a rectangular sleeve disposed to surround said hip or valley rafter and connected to the flanges thereof, a rafter plate connected to the web of said first mentioned rafter, and a connection between said sleeve and said rafter plate.

3. A connection between two structural members each having flanges separated by webs, the flange of one of said members being expansible, comprising a sleeve disposed to surround said one member, a bracket connected to the web of the other member and secured to the sleeve, and a fastening device passed through the sleeve into the flange of said one member to expand the same into gripping engagement with the sleeve.

4. A connecting bracket for use with a channel shaped structural member, comprising a channel shaped mid-section having flanges and a web and an end section integral with and projecting from one end of the web of the mid-section, said mid-section having a width dimension such that it may be freely but snugly nested within the channel shaped structural member, and said end section being bent with respect to the web of said mid-section along a line forming acute angles with the sides of said mid-section.

5. A connection between a ridge piece and a channel shaped rafter, comprising a channel shaped rafter plate having a channel shaped mid-section, and an end section integral with and projecting from the end of the web of said mid-section, said end section being bent over with respect to said web of said mid-section, said mid-section being nested within and secured to said channel shaped rafter, and said end section being secured to said ridge piece.

6. A connection between two structural members, each having flanges interconnected by a web, comprising a rectangular sleeve disposed to surround one of said structural members, a rafter plate having a portion disposed to be nested within the other structural member, and means forming a connection between said sleeve and said rafter plate.

HENRY W. BUELOW.