Sept. 23, 1952 E. R. BACKOFEN 2,611,497

MATERIAL HANDLING DEVICE

Filed Aug. 23, 1947 3 Sheets-Sheet 1

Fig. 4.

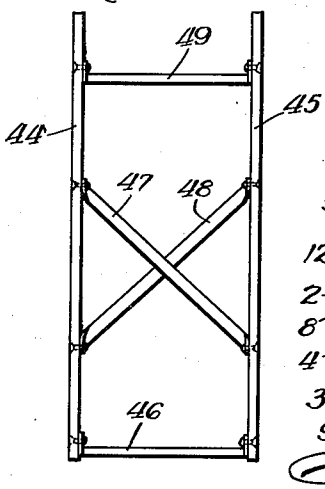

Fig. 1.

Inventor:
E. Ryan Backofen
By Walter E. Schirmer
Atty.

Sept. 23, 1952 E. R. BACKOFEN 2,611,497

MATERIAL HANDLING DEVICE

Filed Aug. 23, 1947 3 Sheets-Sheet 2

Fig. 2.

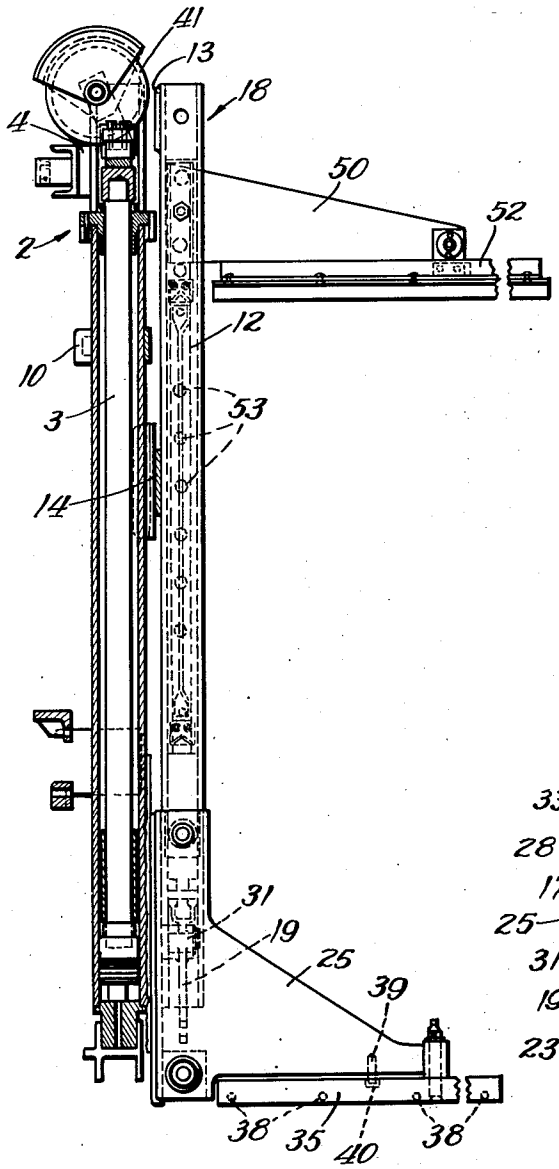

Fig. 3.

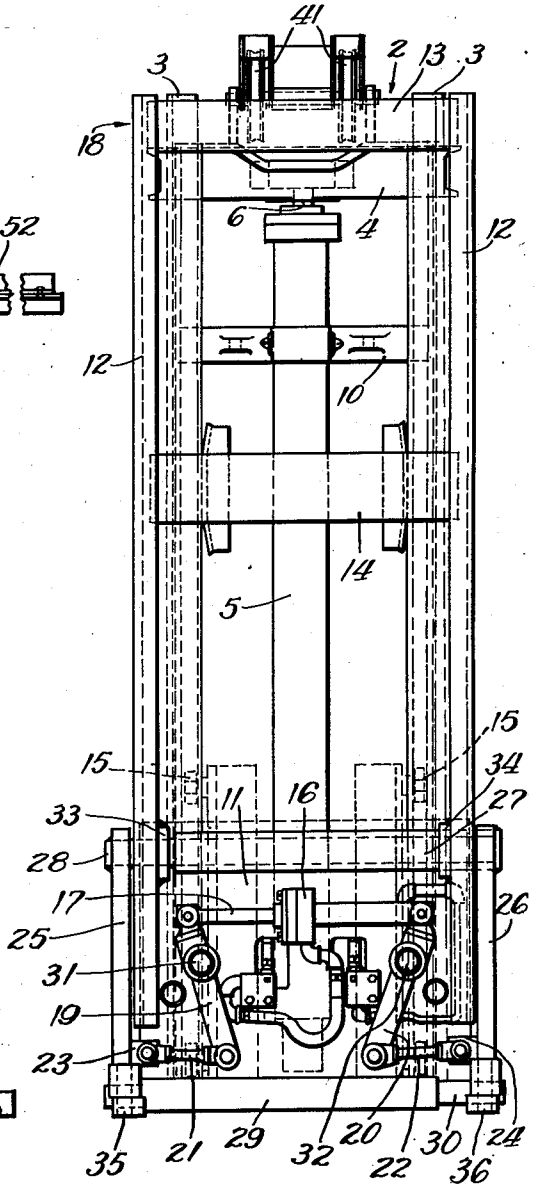

Inventor:
E. Ryan Backofen
By Walter E. Schirmer
Atty.

Sept. 23, 1952 E. R. BACKOFEN 2,611,497

MATERIAL HANDLING DEVICE

Filed Aug. 23, 1947 3 Sheets-Sheet 3

Fig. 5.

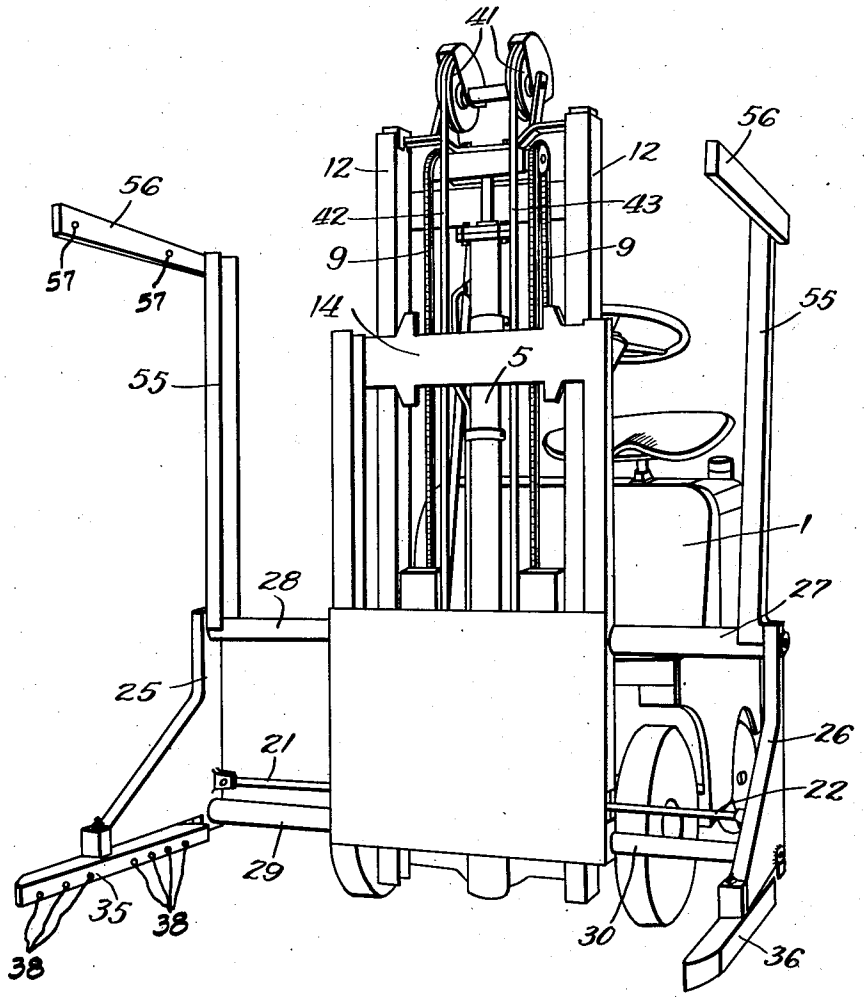

Inventor
E. Ryan Backofen
By Walter E. Schirmer
Atty.

Patented Sept. 23, 1952 2,611,497

UNITED STATES PATENT OFFICE

2,611,497

MATERIAL HANDLING DEVICE

E. Ryan Backofen, Battle Creek, Mich., assignor to Clark Equipment Company, Buchanan, Mich., a corporation of Michigan

Application August 23, 1947, Serial No. 770,318

8 Claims. (Cl. 214—113)

1

My invention relates to material handling devices and more particularly to devices designed to lift, transport, and lower stacks of boxes or containers, a specific example being stacks of boxes containing fruit, vegetables, or the like.

Prior practice in handling stacked boxes of this type consisted of the use of a hand clamp truck being applied to a stack, usually nine high, of boxes and this hand truck being manually operated to transport the stack of boxes to and from storage warehouses, or into box cars or the like. Road inequalities often caused tipping of the stack and falling of the upper boxes which resulted in injury to the fruit, injury to personnel, and loss of time. This method of material handling in the food industry has been expensive in that the time involved in moving individual stacks of boxes by manually operated trucks is excessive and requires a large amount of labor.

Improvements in the prior practice of handling stacks of boxes have consisted of employing a clamping device for attachment to a conventional lift truck, whereby the jaws or clamps which engage the opposite ends of the bottom boxes of a plurality of stacks of boxes are actuated by pivotally mounted arms which move the clamps inwardly and downwardly when engaging the load to be lifted, and outwardly and upwardly when disengaging the load. It will be plainly seen from the above that the maximum width limit of the lifted load is greatly restricted by the use of this type of lifting device because of the arcuity of the path of the jaws or clamps and the necessity of the clamps engaging the stacks of boxes at the lowest possible points on the bottom boxes.

As shown in the co-pending application of E. Ryan Backofen and George L. Turner, Serial No. 649,904, filed February 25, 1946, and now Patent No. 2,536,151, granted January 2, 1951, it is intended to improve upon the prior art of handling boxes, containers, or the like by providing a clamping device for attachment to a conventional lift truck, which clamping device is hydraulically operated and consists of clamping means to engage the opposite ends of the bottom boxes of a plurality of stacks of boxes in order to lift, transport, and lower the stacks of boxes. However, this device is so constructed and so actuated that, even though the two clamps or jaws are slidably mounted for lateral movement in the same plane, the maximum distance between the clamps in their extended position is relatively small and greatly limits the size of the load capable of being lifted. Too, the "ice tongs" principle of lifting is used in this device, whereby the gripping force of the jaws or clamps is in proportion to the weight of the load lifted. In practice, it has been found in this device that the tines or prongs, which extend inwardly from the clamp arms to become embedded in the bottom box of the stack to obtain a positive grip on the load, slide upwardly on the side surfaces of the box until the two opposing clamps have moved into sufficient proximity to each other to accept and hold the weight of the load. This type of gripping is extremely unsatisfactory because the boxes are splintered at their opposite ends making it difficult to affix box labels and dangerous to later handle the boxes by hand, and the gripping pressure oftentimes is finally exerted against the upper portions of the boxes where they are less sturdy than at the lower portions.

2

It is therefore an object of this invention to provide a material handling device for use in lifting and transporting stacks of boxes or the like whereby a greater distance span between the jaws or clamping means is possible, thereby increasing the variety of sizes of loads capable of being lifted.

It is a further object of this invention to provide such a device whereby the actuating means for the clamping action is independently applied so that the clamping pressure is not dependent upon the weight of the lifted load, and can be applied to the load so as to give constant and even pressure and an immediate and positive grip.

Still further objects of the invention are to utilize the lift mechanisms of a conventional industrial truck of the fork lift type to provide the pressure for actuating the clamping means of the present invention, to provide means on the lifting frame, situated above the clamping means, to supplement said clamping means in gripping the stacks of boxes by exerting pressure either on top of the stacks or on the outer surfaces of the opposite ends of the upper boxes of the stacks to prevent tipping of the load, and to provide supports at the upper end of the upright mechanism of the industrial truck over which are trained the conduits or flexible pipe lines, connecting the hydraulic cylinder of the clamping device to the hydraulic system of the industrial truck, thereby eliminating slack in these conduits which otherwise would interfere with operation of the device.

Other objects of the invention will be more apparent from the description of the construction, operation, and arrangement of parts hereinafter related, together with the accompanying drawings to which reference may be had for an

embodiment of the present invention, wherein:

Figure 1 is a perspective view of my material handling device shown in combination with a conventional industrial truck.

Figure 2 is a view in side elevation of the material handling device shown in assembly with the upright mechanism normally mounted on the front portion of a conventional industrial lift truck.

Figure 3 is a front elevational view of the mechanism shown in Figure 2, with the clamps shown in their closed position.

Figure 4 is a front elevational view of the steadying device employed to engage the top surfaces of the stacks of boxes, showing the cross bracing structure therefor.

Figure 5 is a perspective view of a modified version of my invention with the clamps shown in their open position.

Referring now to the drawings, a conventional industrial truck of the fork lift type is indicated at 1. The industrial truck is provided with a conventional lift mechanism, indicated generally at 2, and a conventional tilt mechanism (not shown). The lift mechanism comprises a pair of upright channel members 3, connected at their upper ends by a cross member 4, and a hydraulic cylinder 5, provided with a piston rod 6, which has a head or yoke 7, secured at its upper end for movement relative to the cylinder 5, when hydraulic pressure is exerted therethrough. At the opposite ends of the piston rod head or yoke 7, are placed rotatably mounted sprockets 8, over which are trained lift chains 9, the upper ends of which are attached to cross bar member 10, secured to the rear face of the uprights, and the lower ends of which are attached to the body portion 11 of the lifting device for raising or lowering the lifting device frame through the hydraulic means of the industrial truck.

The lifting device consists of a rigid frame comprising a pair of upright channel frame members, cross bracing members and a backing plate to which are secured the various component parts of the clamping device, which device constitutes an important object of this invention. This entire frame is mounted for guided vertical movement by roller means disposed in the inner channel portions of the upright mast assembly of the lift truck for vertical movement in raising and lowering the stacks of boxes or the like.

The lifting device frame, indicated generally at 18, comprises a pair of parallel upright channel members 12, rigidly joined in spaced relation at their upper ends by cross member 13, and intermediate their upper and lower ends by cross member 14. At their lower ends the upright channel members 12, are joined in spaced relation by means of a backing plate 11, which is secured to the rear surfaces of the upright members 12. The rear surface of the backing plate 11 supports suitably mounted pairs of rollers 15, guided in the channel portions of the upright assembly 3 of the lift truck when the lifting device frame 18 is lifted or lowered.

The clamping means for engaging the outer surfaces of the opposite ends of the bottom boxes of a stack or plurality of stacks of boxes comprises a hydraulic cylinder 16 disposed in front of the backing plate 11 and which is independently operatively connected to the hydraulic system of the industrial truck. Arranged for cooperation with the hydraulic cylinder 16 and its related piston rod 17 are arms 19 and 20 pivotally mounted on lugs 31 and 32 on the backing plate,

which arms are pivotally connected at their lower ends through connections 21 and 22 to lugs or bosses 23 and 24, which are, in turn, rigidly secured to clamp members 25 and 26. Through suitable hydraulic control valve means, the piston 17 may be actuated to move the clamp members toward or away from each other.

The clamp members 25 and 26 are mounted for lateral sliding movement in the same plane on backing plate 11 by means of telescoping rod and sleeve means 27, 28, 29, and 30, which slide one within the other when the clamp members 25 and 26 are opened or closed. These telescoping members are reversely mounted, relative to the two clamp arms, on the lifting device to eliminate the tendency to bind when the clamp members 25 and 26 are actuated. That is, sleeve member 27 is mounted on the upper portion of clamp member 26 and sleeve member 29 is mounted on the lower portion of clamp member 25, while rod member 28 is mounted on the upper portion of clamp member 25 and rod member 30 is mounted on the lower portion of clamp member 26. Free lateral movement for the clamp members 25 and 26 is obtained by supporting the telescoping means combinations in apertured guides 33 and 34, carried on backing plate 11.

In order that the bottom boxes of the stacks of boxes to be lifted are properly clamped at their opposite ends, clamps members 25 and 26 are provided with horizontally extending arms 35 and 36 which are pivotally suspended therefrom by means of a bolt 37, located centrally of the arms 35 and 36. The arms 35 and 36 are pivotally mounted on the clamp members to provide means for centering the load and to compensate for minor irregularities in the size of the boxes. The arms 35 and 36 are each provided with a series of inwardly extending pins or pointed projections 38 located longitudinally therealong for penetrating the outer surfaces of the opposite ends of the bottom boxes to secure a positive grip on the load and to prevent slippage.

In order to limit the horizontal swinging movement of the arms 35 and 36 about their pivots, there is provided on the undersurfaces of the clamp members 25 and 26, downwardly projecting pins 39 which are fitted into transverse slots 40 in the arms 35 and 36, thus limiting the horizontal movement of the arms 35 and 36 so that they will be in alinement when moving into position to engage a load.

Pulleys 41 are suitably secured to the lifting head or yoke and hydraulic hoses 42 and 43 are trained thereover to run from the control valve (not shown) on the industrial truck upwardly and over the pulleys 41 and downwardly to opposite ends of the hydraulic cylinder 16 for operating clamp members 25 and 26 in receiving or disengaging a load. Thus, when the lifting device is raised, the pulleys are raised simultaneously therewith, and the hose lines trained thereover, remain taut allowing no slack lines to interfere with the operation of the machine.

To steady the top boxes of the stacks of boxes, there is provided a load compressor device which comprises a pair of parallel vertical members, cross bracing therefor and a forwardly extending shelf secured to the upper portions of the legs for resting on the tops of the stacks of boxes to eliminate tipping. The parallel vertical members 44 and 45 are securely braced by reinforcing members 46, 47, 48, and 49, and in operation are movably secured in the channel portions of the upright members 12 of the lifting device for free

vertical operation. At the upper ends of the vertical members **44** and **45**, there are secured forwardly extending brackets **50** and **51**. The forward ends of these brackets **50** and **51**, pivotally support a stabilizing member **52** for slight forward and rearward rocking movement. The member **52** preferably comprises a sheet metal portion on whose under surface is secured a pliable cushioning material such as a sponge rubber pad or the like, for cushioned stabilizing contact with the upper surfaces of the stacks of boxes. A series of holes **53** is formed through the vertical members **44** and **45** and longitudinally thereof for insertion of pins **54**, which limit the downward movement of the load compressor. By providing a plurality of holes spaced longitudinally of the vertical members, the load compressor may be adjusted so that stacks of boxes of different heights may be lifted and transported. The pins **54** are inserted through the holes **53** and extend outwardly of the vertical members **44** and **45** so that downward movement of the load compressor is arrested when the outwardly extending portions of the pins **54** contact the top surfaces of the upright channel members **12** of the lifting device frame.

In operation, the truck **1** approaches the stacks of boxes to be lifted with the lifting device in partially raised position and the clamp members **25** and **26** in open position. When the position of the truck is such that the stacks of boxes are centered between the clamp members **25** and **26** and the stabilizing member **52** is directly over the top of the stacks of boxes, the lifting device frame is lowered until the weight of the stabilizing member **52** rests upon the tops of the boxes and the pivotally suspended arms **35** and **36** are level with the lower portions of the bottom boxes of the stacks of boxes. Hydraulic pressure is then applied by the truck operator through hydraulic cylinder **16** to close clamp members **25** and **26** until the boxes are firmly grasped between these members. The stacks of boxes are then raised and may be tilted rearwardly to eliminate tipping by actuating the tilt cylinder of the truck. The load is transported to the desired location and lowered to the floor or ground. The clamp members **25** and **26** are opened outwardly to release their grip on the boxes and the lifting device is raised to disengage the stabilizing unit from the top of the stacks of boxes and the truck is free for another operation.

As a modified version of my invention (shown in Fig. 5) I provide, in lieu of the load compressor device for steadying the tops of the stacks to prevent tipping, a pair of vertically extending upright members **55**, whose bottom portions are secured to the upper surfaces of the outer portions of sleeve member **27** and rod member **28**. Suitably secured to the upper ends of upright members **55** are forwardly extending horizontal arms **56**, each of which arms is provided on its inner surface with a plurality of inwardly extending pin members **57** which engage the outer surfaces of the opposite ends of the upper boxes of the stacks when clamp members **25** and **26** are closed to engage the load, thus steadying the load and eliminating any tendency to tip.

While various changes may be made in certain details of the illustrated embodiment of the invention herein described, it is intended that the spirit and scope of my invention shall govern and that I shall not be limited to the matters contained in the accompanying drawings.

I claim:

1. In a lifting device, for attachment to an industrial truck or like vehicle having hydraulic lift means, a frame, a pair of forwardly extending laterally spaced horizontal clamping arms mounted thereon; hydraulically actuated extendible means horizontally floatingly mounted in transverse alinement between said clamping arms, connecting means operatively connecting said hydraulic means to the hydraulic system of said truck, a pair of pivoted levers mounted on said frame, the upper ends of such levers being pivotally connected to opposite ends of said extensible means and means pivotally connecting the lower ends of said levers to said clamping arms.

2. The device of claim 1 including telescoping mounting means between said clamping arms providing laterally opposed motion of said clamping arms.

3. For use with an industrial truck having hydraulic lift means, a lifting device comprising, a frame, a pair of forwardly extending horizontally spaced load engaging clamp arms mounted thereon, hydraulically actuated extensible means horizontally floatingly mounted in transverse alignment between said clamp arms, a pair of pivoted levers mounted on said frame, the upper ends of said levers being pivotally connected to the opposite ends of said extensible means, means pivotally connecting the lower ends of the levers to said clamp arms, and load stabilizing means vertically movable in said frame above said clamp arms for steadying the upper portion of a load engaged by the clamp arms.

4. For use with an industrial truck having hydraulic lift means, a lifting device comprising, a frame, a pair of forwardly extending horizontally spaced load engaging clamp arms mounted thereon, hydraulically actuated extensible means horizontally floatingly mounted in transverse alignment between said clamp arms, connecting means operatively connecting said hydraulic means to the hydraulic system of the truck, a pair of pivoted levers mounted on said frame, the upper ends of such levers being pivotally connected to opposite ends of said extensible means, means pivotally connecting the lower ends of said levers to said clamp arms, and load stabilizing means vertically movable in said frame above said clamp arms for steadying the upper portion of a load engaged by the clamp arms.

5. For use with an industrial truck having hydraulic lift means, a lifting device comprising, a frame, a pair of forwardly extending horizontally spaced clamp arms mounted thereon, telescoping mounting means between said clamp arms providing laterally opposed motion of said clamp arms, hydraulically actuated extensible means horizontally floatingly mounted in transverse alignment to said clamp arms, a pair of pivoted levers mounted on said frame, the upper ends of such levers being pivotally connected to opposite ends of said extensible means, means pivotally connecting the lower ends of said levers to said clamp arms, and load stabilizing means vertically movable in said frame above said clamp arms for steadying the upper portion of a load engaged by the clamp arms.

6. For use with an industrial truck having hydraulic lift means, a lifting device comprising, a frame, a pair of forwardly extending horizontally spaced load engaging clamp arms mounted thereon, telescoping mounting means between said clamp arms providing laterally op-

posed motion of said clamp arms, hydraulically actuated extensible means horizontally floatingly mounted in transverse alignment to said clamp arms, connecting means operatively connecting said hydraulic means to the hydraulic system of the truck, a pair of pivoted levers mounted on said frame, the upper ends of such levers being pivotally connected to opposite ends of said extensible means, means pivotally connecting the lower ends of said levers to said clamp arms, and load stabilizing means vertically movable in said frame above said clamp arms for steadying the upper portion of a load engaged by the clamp arms.

7. For use with an industrial truck having a hydraulic system and a load supporting carriage, a load engaging device comprising, a pair of forwardly extending horizontally spaced clamp arms mounted on the carriage for movement toward and away from each other, a pair of levers pivotally mounted intermediate their ends on the carriage about axes extending longitudinally of the truck, horizontal hydraulically actuated extendible means extending transversely of the carriage and pivotally mounted at the ends thereof to one of the ends of each of said levers, means for operatively connecting said hydraulically actuated extendible means to the hydraulic system of the truck, and means for pivotally connecting the other of the ends of each of said levers to said clamp arms.

8. For use with an industrial truck having a hydraulic system and a load supporting carriage, a load engaging device comprising, a pair of vertically spaced telescoping mounting means extending transversely of the carriage and

carried thereby, a pair of forwardly extending horizontally spaced clamp arms secured to the ends of said telescoping means, a pair of levers pivotally mounted intermediate their ends on the carriage about axes extending longitudinally of the truck, horizontal hydraulic actuated extendible means extending transversely of the carriage and pivotally mounted at the ends thereof to one of the ends of each of said levers, means for operatively connecting said hydraulically actuated extendible means to the hydraulic system of the truck, and means for pivotally connecting the other of the ends of each of said levers to said clamp arms.

E. RYAN BACKOFEN.

REFERENCES CITED

The following references are of record in the file of this patent:

UNITED STATES PATENTS

Number	Name	Date
1,807,360	Wehr	May 26, 1931
1,884,861	Remde	Oct. 25, 1932
1,909,813	Crosbie	May 16, 1933
1,971,952	Townsend	Aug. 28, 1934
2,178,369	Dunham	Oct. 31, 1939
2,403,356	Francis	July 2, 1946
2,432,411	Guerin et al.	Dec. 9, 1947
2,475,367	Avery	July 5, 1949
2,509,023	Vogel et al.	May 23, 1950
2,512,409	Adde	June 20, 1950

FOREIGN PATENTS

Number	Country	Date
277,813	Great Britain	Sept. 29, 1927