Oct. 10, 1950 H. F. CHAMBERS 2,524,881

COMBINED CLASP AND LIGHTING IMPLEMENT

Filed May 24, 1948

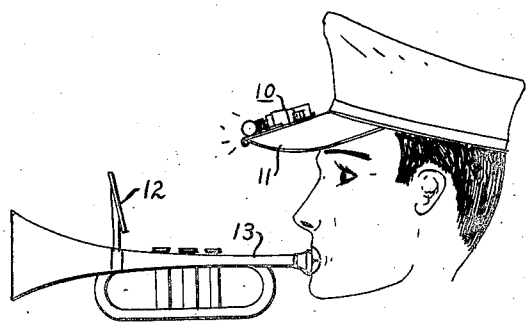

Fig. 1

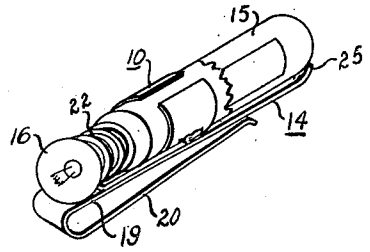

Fig. 2

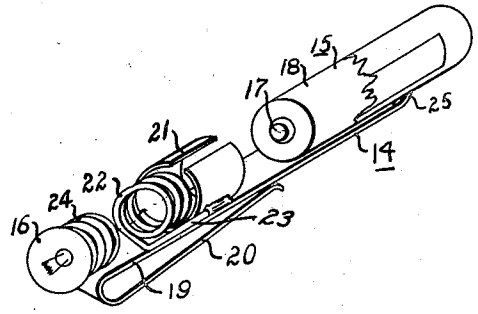

Fig. 3

INVENTOR.
Harvey F. Chambers
BY
Clyde H. Haynes
his attny.

Patented Oct. 10, 1950 2,524,881

UNITED STATES PATENT OFFICE

2,524,881

COMBINED CLASP AND LIGHTING IMPLEMENT

Harvey Frederick Chambers, Amherst, Ohio

Application May 24, 1948, Serial No. 28,911

2 Claims. (Cl. 240—10.6)

1

My invention relates in general to a lighting implement and in particular to a flashlight which is attachable to a band cap.

Members of bands who have marched at night have found it very difficult to read their music with the aid of flashlights or other lighting devices which have previously been designed. Therefore one of the objects of my invention is to provide a lighting implement which may be easily attached to the band cap.

Another object of my invention is to provide a battery and bulb holder in which the bulb may be screwed into contact with the battery, and which is clipped onto the visor of the hat.

Another object of my invention is to provide a lighting implement with a clamp to receive the battery and a coil spring to receive the flashlight bulb and align the bulb in operative relationship with the battery.

Another object of my invention is to provide a lighting implement with a threaded bulb holder which has a spring tension to hold a bulb in any position.

Other objects and a fuller understanding of my invention may be had by referring to the following descriptions and drawings, in which:

Figure 1 is a plan view illustrating the use of my lighting implement;

Figure 2 is a perspective view of my lighting implement; and

Figure 3 is a perspective view of my lighting implement with the battery and bulb partly removed to show the construction thereof.

My lighting implement 10 which is shown in Figure 1 clasped on the visor 11 of a hat and pointed toward the music 12 of an instrument 13 is best illustrated in the enlarged view in Figures 2 and 3. This lighting implement 10 generally comprises a base member 14 supporting a battery 15 and a flashlight bulb 16. I have found it preferable to use batteries of the penlight type; however, it is understood that any suitable battery may be used and that the corresponding bulb may be used without departing from the spirit and scope of this invention. The battery 15 has a center terminal 17 forming one of the contacts and has an outer electrical conducting wall 18 forming the other contact of the battery. The center terminal 17 engages the light bulb 16.

The base member 14 generally comprises an elongated base portion 19 having clasp portion 20 folded back thereupon. In the construction of this base member 14 the clasp portion 20 and the elongated base portion 19 may be construct-

2

ed of a single piece of material which has spring-like properties so that the implement will be clasped onto the visor 11 with the visor extending between the elongated base portion 19 and the clasp portion 20. I have also provided the elongated base portion 19 with a clamp 21 securely fastened thereto. This clamp 21 clampingly receives the battery 15 and holds the battery in longitudinal alignment with the elongated base portion 19. The clamp 21 engages the electrical conducting wall 18 of the battery to form electrical contact between the base portion 19 and the battery. When penlight batteries having cardboard thereon are used, at least part of the cardboard or paper must be removed before the battery is slipped into the clamp 21.

I have used a coil spring 22 carried by this base portion 19 to threadably receive the bulb. In the construction of the lighting implement illustrated, this coil spring has a fastening portion 23 which extends along the base portion 19 and is soldered to the clamp 21 and the base portion 19. The individual coils of the coil spring 22 spread apart to receive the teeth 24 of the bulb 16 therein. Thus the bulb 16 is tightly held by the coil spring 22 when it is only partly turned therein.

When my lighting implement 10 is completely assembled, the bulb, the coil spring and the battery are in axial alignment so that the bulb may be turned into the coil spring 22 and against the center terminal 17 of the battery 15. When the musician wishes to turn off his light, he simply unscrews the bulb until electrical contact between the bulb and the battery is broken. The coil spring 22 engages the teeth 24 of the bulb 16 to prevent it from falling out of the implement.

I have also provided the elongated base portion 19 with a curved end portion 25 over which the battery is slipped when the battery is inserted in the clamp 21. This curved end portion 25 prevents the battery 15 moving endwise out of the clamp 21 and away from the bulb 16.

When the musician desires to use the light on his cap at night, either for reading his music or for a candlelight or firefly ceremony, he simply slides the lighting implement 10 onto the visor 11 of his cap. The visor 11 easily slides between the clasp portion 20 and the base portion 19. The bulb 16 is then screwed further into the coil spring 22 and against the battery 15, thus completing the electrical circuit from the battery through the bulb, the coil spring, and the clamp, and back to the battery.

Although I have herein described the preferred construction and embodiment of my invention, it is understood that other modifications and similar constructions may be used without departing in any way from the spirit and scope of my invention, which is claimed as follows.

I claim as my invention:

1. A lighting implement adapted to clasp onto a supporting article and hold a battery and a bulb in closed electrical circuit, said lighting implement comprising, a base member of current conducting spring-like material defining an elongated base portion having a clasp portion at one end thereof folded back thereupon and resiliently convergent therewith to claspingly receive a supporting article therebetween, battery holding clamp means, joined to said elongated base portion to clampingly receive a battery and form electrical connection between the elongated base portion and the battery, and a bulb retaining coil spring carried by said base portion in alignment with said battery holding clamp means to retain a bulb in direct contact with said battery and in series electrical connection with said base portion.

2. A lighting implement adapted to clasp onto a supporting article and hold a battery and a bulb in closed electrical circuit, said lighting implement comprising, a base member of current conducting spring-like material defining an elongated base portion having a clasp portion at one end thereof folded back thereupon and resiliently convergent therewith to claspingly receive a supporting article therebetween, battery holding clamp means, joined to said elongated base portion to clampingly receive a battery and form electrical connection between the elongated base portion and the battery, and a bulb retaining coil spring carried by said base portion at the said one end thereof joining the clasp portion and in alignment with said battery holding clamp means to retain a bulb in direct contact with said battery and in series electrical connection with said base portion.

HARVEY FREDERICK CHAMBERS.

REFERENCES CITED

The following references are of record in the file of this patent:

UNITED STATES PATENTS

Number	Name	Date
1,197,427	Arnold	Sept. 5, 1916
1,319,997	Galloway et al.	Oct. 28, 1919
1,462,054	Tangee	July 17, 1923
1,030,516	Lagarde et al.	June 25, 1912
2,104,883	Spahr	Jan. 11, 1938
2,236,071	Roskam et al.	Mar. 25, 1941