T. T. LECROY.

CAN OPENER.

APPLICATION FILED NOV. 15, 1911.

1,068,507. Patented July 29, 1913.

Fig. 1.

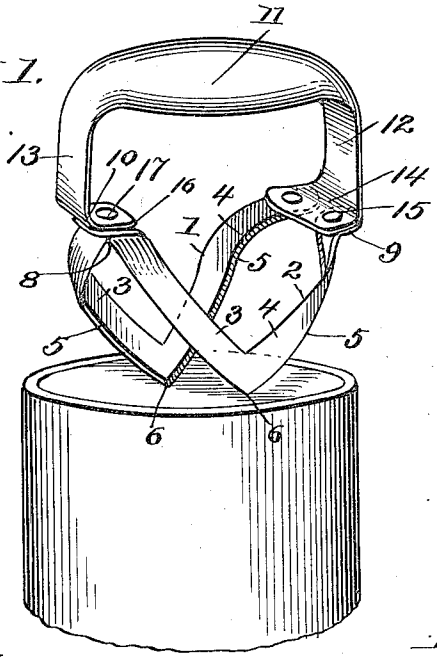

Fig. 2.

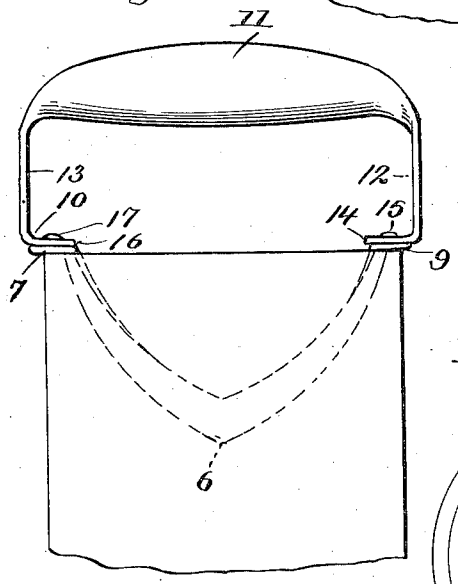

Fig. 3.

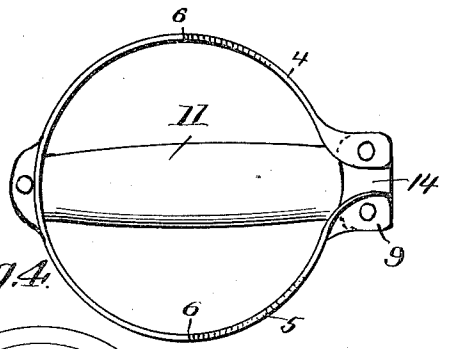

Fig. 4.

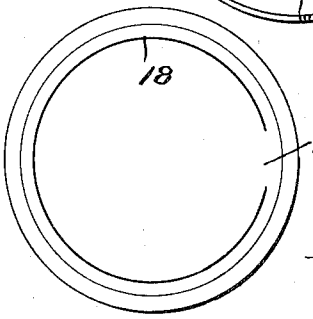

Witnesses

Edward P. Rea.

Juana M. Fallin.

Inventor

T. T. Lecroy

By

A. M. Stacey, Attorney

COLUMBIA PLANOGRAPH CO., WASHINGTON, D. C.

UNITED STATES PATENT OFFICE.

THOMAS T. LECROY, OF LONSDALE, ARKANSAS.

CAN-OPENER.

1,068,507. Specification of Letters Patent. Patented July 29, 1913.

Application filed November 15, 1911. Serial No. 660,519.

To all whom it may concern:

Be it known that I, THOMAS T. LECROY, citizen of the United States, residing at Lonsdale, in the county of Garland and State of Arkansas, have invented certain new and useful Improvements in Can-Openers, of which the following is a specification.

This invention relates to can openers and aims primarily to provide a can opener which may be more readily and quickly manipulated than the ordinary form of opener, to properly cut the top of a can. The ordinary opener requires to be moved around the can top during the opening or cutting operation and considerable time is consumed and the edges of the cut are in most instances left in jagged condition.

The present invention contemplates providing an opener of this type so constructed that a downward pressure thereon against the top of the can to be opened, will be all that will be necessary to properly cut through the can top.

A further object of the invention is to provide an opener of this class having its blade so constructed as to cut a substantially circular slit in the can top to be opened, leaving, however, a narrow neck portion uniting the top to the can so that when the can is thrown away, after having been opened, the top will be thrown away with it.

A further object of the invention is to provide a can opener which will accomplish the results and will possess the advantages above mentioned and which will be simple in construction and embody no movable parts liable to get out of order.

For a full understanding of the invention reference is to be had to the following description and accompanying drawing, in which:—

Figure 1 is a perspective view of the opener embodying the present invention. Fig. 2 is a view in side elevation thereof, the blade of the opener being illustrated in dotted lines after having been inserted through the top of a can to be opened. Fig. 3 is a bottom plan view of the opener. Fig. 4 is a top plan view of a can, the top of which has been cut by the opener.

Corresponding and like parts are referred to in the following description and indicated in all the views of the accompanying drawing by the same reference characters.

In the drawing, the blade of the opener is illustrated as formed from a single piece of material and it includes oppositely arranged blade members, one indicated by the numeral 1 and the other by the numeral 2. Each of these said members includes a portion 3 and a portion 4, the said portions of each member being curved spirally upwardly in opposite directions as clearly shown in Fig. 1, and each being formed with a cutting edge 5, the edges, at the meeting lower ends of the portions of each member resulting in an entering point 6. The portions 3 of the two members of the blade are connected or integral at their upper ends as indicated by the numeral 7 and the cutting edges 5 of these said portions are continuous, or in other words, intermerge at the point of juncture of the said upper ends of the said portions, as indicated at 8. The upper ends of the portions 4 of the blade members are relatively disconnected or spaced and are bent outwardly to lie in a substantially horizontal plane, as indicated by the numeral 9, said ends, as stated, being spaced from each other so that the cutting edges 5 of these said portions of the members do not merge or coöperate. The portions 3 of the blade members at their juncture are bent outwardly as at 10.

The handle of the opener is also formed from a single piece of material which is stamped or cast to form a grip portion 11 and end portions 12 and 13 located at the ends of the said grip portion 11. The lower end of the portion 12 of the handle is bent inwardly to form an ear 14 and the outwardly bent end portions 9 of the portions 4 of the blade members are riveted or otherwise secured as at 15 to the under side of this said ear 14. In a like manner, the end of the portion 13 of the handle is bent inwardly to form an ear 16 riveted as at 17 to the bent portion 10 of the blade portions 3.

From the foregoing description it will be observed that the handle spans the blade and that the cutting edge of the blade as a whole is continuous except at one side of the blade (that side at which the upper ends of the portions 4 of the blade are located) where this cutting edge is interrupted. It will further be understood that in using the opener the handle 11 is to be grasped and the inner points 6 of the blade disposed against the upper side of the top of a can to be opened, after which downward pres-

sure is exerted against the opener causing the blades to enter through the can top making a substantially circular incision or slit as indicated at 18 in Fig. 4 of the drawing. It will be understood, however, that by interrupting the cutting edge of the blade, a relatively narrow neck 19 is left between the partly severed cover 18 and the body of the can, which is desirable for the reason that after the can has been emptied, it together with its top may be thrown away at one time.

By referring to Fig. 2 of the drawing, it will be observed that the ears 14 and 16 constitute stops to limit the entering or downward movement of the blade through the top of the can being opened, and that these ears coöperate with the top of the can outwardly beyond the incision 18 therein, thereby positively preventing the portion of the top encircled by the incision, being pressed into the body of the can and into the material contained therein.

Having thus described the invention what is claimed as new is:—

A can opener comprising a plate having opposed blade members each having oppositely upwardly spirally curved cutting portions, the cutting portions at one side of the blade being united and at their juncture being bent to form a laterally projecting ear and at the other side of the blade being disconnected and having their disconnected ends bent to form laterally projecting spaced ears, and a handle comprising a grip-portion and portions integral with the grip-portion and projecting downwardly from the ends thereof and having their lower end portions bent inwardly laterally toward each other and secured one to the first mentioned ear of the blade and the other to the second mentioned ears of the blade, the said ears and the inbent ends of the depending portion of the handle constituting stops to limit the entering movement of the blade.

In testimony whereof I affix my signature in presence of two witnesses.

THOMAS T. LECROY. [L. S.]

Witnesses:
JNO. R. NANCE,
JAKE WILLIAMS.

Copies of this patent may be obtained for five cents each, by addressing the "Commissioner of Patents, Washington, D. C."