PCT WORLD INTELLECTUAL PROPERTY ORGANIZATION
International Bureau

INTERNATIONAL APPLICATION PUBLISHED UNDER THE PATENT COOPERATION TREATY (PCT)

(51) International Patent Classification 6 :
G03B 35/10, A61C 19/04

A1

(11) International Publication Number: **WO 95/16222**

(43) International Publication Date: 15 June 1995 (15.06.95)

(21) International Application Number: PCT/SE94/01143

(22) International Filing Date: 29 November 1994 (29.11.94)

(30) Priority Data:
9304041-8 6 December 1993 (06.12.93) SE

(71) Applicant *(for all designated States except US)*: NOBEL-PHARMA AB [SE/SE]; P.O. Box 5190, S-402 26 Göteborg (SE).

(72) Inventors; and
(75) Inventors/Applicants *(for US only)*: CARLSSON, Lennart [SE/SE]; Matildebergsgatan 36, S-431 38 Mölndal (SE). JEMT, Torsten [SE/SE]; Holmebacken 31B, S-443 38 Lerum (SE). LIE, Anders [SE/SE]; Jordfallsvägen 20, S-445 34 Bohus (SE).

(74) Agent: OLSSON, Gunnar; Nobelpharma AB, P.O. Box 5190, S-402 26 Göteborg (SE).

(81) Designated States: AU, CA, FI, JP, NO, US, European patent (AT, BE, CH, DE, DK, ES, FR, GB, GR, IE, IT, LU, MC, NL, PT, SE).

Published
With international search report.
In English translation (filed in Swedish).

(54) Title: METHOD AND ARRANGEMENT FOR TAKING PICTURES OF THE HUMAN BODY, ESPECIALLY OF THE MOUTH CAVITY

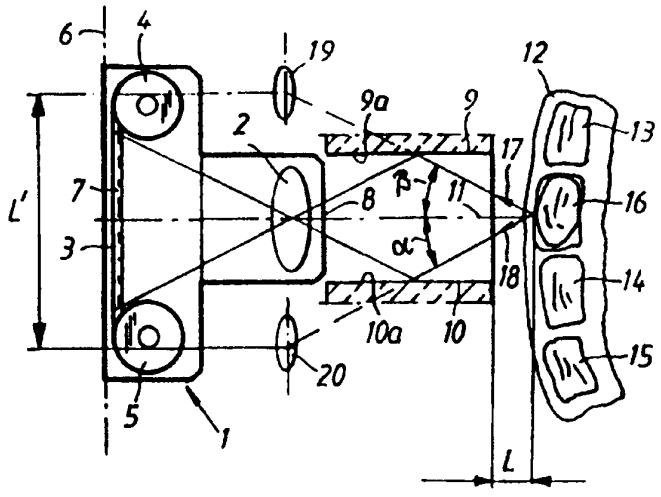

(57) Abstract

In connection with the artificial construction of a tooth, dental bridge, etc., pictures are taken from at least two different angles by means of a camera (1) which comprises a camera housing for film (3), and a lens system (2). Optical radiation (17, 18) emanating from a respective object or object part (13, 14, 15, 16) is reflected on one or more radiation-reflecting reflection surfaces (9a, 10a), which are situated between the respective object or object part and the lens system, before passing through the lens system (2) to the film (3) in the camera housing. At leat two virtual lens functions (19, 20) which are situated at a distance from one another are obtained in this way. With these lens functions, two different images of the respective object or object part are generated simultaneously from the said different angles at one and the same exposure with the camera (1).

FOR THE PURPOSES OF INFORMATION ONLY

Codes used to identify States party to the PCT on the front pages of pamphlets publishing international applications under the PCT.

AT	Austria	**GB**	United Kingdom	**MR**	Mauritania
AU	Australia	**GE**	Georgia	**MW**	Malawi
BB	Barbados	**GN**	Guinea	**NE**	Niger
BE	Belgium	**GR**	Greece	**NL**	Netherlands
BF	Burkina Faso	**HU**	Hungary	**NO**	Norway
BG	Bulgaria	**IE**	Ireland	**NZ**	New Zealand
BJ	Benin	**IT**	Italy	**PL**	Poland
BR	Brazil	**JP**	Japan	**PT**	Portugal
BY	Belarus	**KE**	Kenya	**RO**	Romania
CA	Canada	**KG**	Kyrgystan	**RU**	Russian Federation
CF	Central African Republic	**KP**	Democratic People's Republic of Korea	**SD**	Sudan
CG	Congo			**SE**	Sweden
CH	Switzerland	**KR**	Republic of Korea	**SI**	Slovenia
CI	Côte d'Ivoire	**KZ**	Kazakhstan	**SK**	Slovakia
CM	Cameroon	**LI**	Liechtenstein	**SN**	Senegal
CN	China	**LK**	Sri Lanka	**TD**	Chad
CS	Czechoslovakia	**LU**	Luxembourg	**TG**	Togo
CZ	Czech Republic	**LV**	Latvia	**TJ**	Tajikistan
DE	Germany	**MC**	Monaco	**TT**	Trinidad and Tobago
DK	Denmark	**MD**	Republic of Moldova	**UA**	Ukraine
ES	Spain	**MG**	Madagascar	**US**	United States of America
FI	Finland	**ML**	Mali	**UZ**	Uzbekistan
FR	France	**MN**	Mongolia	**VN**	Viet Nam
GA	Gabon				

Method and arrangement for taking pictures of the human body, especially of the mouth cavity.

TECHNICAL FIELD

The present invention relates to a method for taking pictures of the human body, especially of the mouth cavity, or of a model for artificial construction of a tooth, dentine, a prosthesis, etc., here called objects, and for taking these pictures from at least two different angles. So-called stereophotography, that is photography for three-dimensional measurement, etc. may be appropriate in this respect. The method uses camera equipment which comprises a camera housing for film or other image-recording material, and a lens system, and which, when photographs are being taken, is aimed at one or more objects or object parts, for example implant, tooth remnant, tooth, etc. Possible examples of image-recording material besides film (silver film) are digital video (CCD camera) or digital camera. The invention also relates to a camera for implementing the method.

PRIOR ART

It is already known to use stereophotography in connection with producing dental articles and for dental work, in which case at least two cameras have generally been set up at a distance from one another and have been activated for taking pictures from different angles. It is also already known to use stereophotography in photogrammetric connections for measuring locations and positions of various surfaces, teeth, objects, etc. In order to be able to reach conclusions on the actual positions in space/the actual coordinate system, it is possible to use various aids, such as coordinate-measuring equipment, marked glass discs, etc.

DESCRIPTION OF THE INVENTION

TECHNICAL PROBLEM

There is a requirement for it to be possible to

produce dental articles (dental bridges, dental caps, etc.) in a simpler way compared with the present-day production methods. The invention aims to solve this problem.

When producing dental bridges, prostheses and the like, a model is normally made at present by taking an impression with an impression compound in the mouth cavity. There is a requirement that it should be possible to eliminate such modelling in the methods for production of the dental article. The invention solves this problem.

The use of stereophotography is not entirely self-evident in this context, even if it does solve the problem of eliminating modelling with an impression compound. The use of two or more cameras for establishing stereophotographs presents problems, since it is difficult to prevent the patient from moving between two shots. Even very small time delays between the shots, and small movements of the patient, have a deleterious effect on the result, and one must therefore ask oneself whether the known equipment is not more suited to laboratory tests rather than to everyday clinical use. The invention solves this problem and proposes an arrangement which can be used in the practical application.

Stereophotography must be able to provide a greater degree of accuracy or resolution in the dental product compared with previous uses of stereophotographic equipment. The invention solves this problem and also displays a greater degree of accuracy even in comparison with the use of the said modelling.

It has been shown that methods and arrangements used hitherto have led to static stress forces being built into the dental article/dental bridge in question, and even though these forces are relatively small, they lead in the long term to a collapse of all or part of the jaw bone in question. There is therefore a need for substantially greater accuracy of production than has previously been the case. The invention solves this problem too.

In connection with dental work in and around the

mouth cavity, it is important that the photographic equipment employed can have small dimensions and can be easy to handle when in use. The space available in and around the patient's mouth cavity is limited, and the personnel providing the treatment should not need to possess any photographic expertise in order to perform their dental work. The invention solves this problem too.

In accordance with the concept of the invention, the mirrors reflecting the optical radiation will be used to form virtual lens functions which are arranged at a distance from one another in order to obtain the stereo imaging effect. In one embodiment, the interaction between the camera parts and the reflection surface(s) will be able to be locked in a mutual relationship at the works so that a simplified use of the camera is achieved. The invention solves this problem too.

In a further embodiment, it will be possible for the measurements in the images to be overdefined and for the positions of the lenses to be determined by means of solution of equation systems. This is also permitted by the invention.

There is a need to render more efficient all the operations surrounding the production of dental articles which are applied in the mouth cavity, with the whole production chain being taken into account, including examination of the patient's mouth and production in the actual material (titanium, for example) in the machine. The novel method and arrangement reveal new avenues for realizing such methods and arrangements and can be used, for example, in connection with the method and the arrangement according to the Swedish patent [lacuna].

When working in the mouth cavity, it should be possible, for example, to effect imaging of a number of implants (2 to 6 implants, for example) in a jaw bone both at the level of the fixture and at the level of the spacer. The invention solves this problem.

SOLUTION

The feature which can principally be regarded as

characterizing a method according to the invention is that optical radiation emanating from a respective object or object part is reflected on one or more radiation-reflecting reflection surfaces, which are situated between the respective object or object part and the lens system, before passing through the lens system to the film in the camera housing in order to obtain at least two lens functions which are situated at a distance from one another and of which at least one is virtual. Two or more different images of the respective object or object part are generated with the said lens functions from the said different angles at one and the same exposure.

In a preferred embodiment, the said optical radiation from the respective object or object part is made to pass an end surface on a unit which is provided with one or more inner walls which each form a reflection surface.

The feature which can principally be regarded as characterizing a camera according to the invention is that it is arranged with one or more reflection surfaces situated between the said lens system and the respective object/object part or tooth/tooth replacement, and that the reflection surface(s) reflect(s) optical radiation emanating from the respective object or tooth/tooth replacement, or part thereof, before the optical radiation passes through the lens system and reaches the film or equivalent. Further characteristics are that the reflection surface or the reflection surfaces is/are arranged to establish at least two lens functions which are situated at a distance from one another and of which at least one lens function is virtual. The said lens functions produce, on film, images from different angles at one and the same exposure.

In one embodiment, the reflection surfaces are two in number, and the reflection surfaces extend essentially parallel to the viewing direction of the camera. In this way, three images of the respective object or tooth/tooth replacement, or part thereof, are obtained on the film during one and the same exposure.

This is achieved by means of the fact that two virtual lens functions arise together with the lens function performed by the said lens system.

In one embodiment, the camera consists of a standard camera provided with a flash function, for example a 35-mm miniature camera with, for example, a 24-mm wide-angle lens. This basic construction is known per se and is in this case provided with the said reflection surface(s) or mirror surface(s). The real or actual lens is preferably arranged in a fixed manner on the camera housing, for example by means of glue, in order to obtain optical and geometric stability. Members, for example a glass disc, can be arranged in order to ensure that the film is applied with great evenness/precision to a plane surface. By this it is meant that the film should not deviate from the plane by more than ± 0.1 mm, for example.

In a further embodiment, each reflection surface is situated on a prism body which is mounted on the camera opening. The body in this case supports the reflection surface or the reflection surfaces on one or more inner walls. The optical radiation passes, via the body, through an end surface which is directed towards the respective object/object part or tooth/tooth replacement (part). In one embodiment, the arrangement with the camera and the reflection surface(s)/mirror(s) is designed to image areas of the order of magnitude of 50 x 100 mm. The arrangement operates at a distance from the respective object/object part or tooth/tooth replacement (part) which is of the order of magnitude of 50 - 100 mm. The imaging on the film can take place at a scale of 1:4.

The arrangement is also characterized in that the error in the imaging of the respective object/object part or tooth/tooth replacement (part) is of the order of magnitude of 0.02 mm for distinct points. The camera can be calibrated in its entirety with an accuracy which lies in the region of 0.005 mm (on the image scale).

ADVANTAGES

By means of what has been proposed above, a conventional miniature camera with flash unit can form the basis for the structure or the basic construction. The camera is handled in the normal way and, by virtue of its small format, is easy to manage and easy to use close to the patient's mouth. The patient experiences less discomfort during identification of, for example, positions and inclinations on implants in one or both jaws. Accurate calibration can be performed, and the costs of the camera can be kept relatively low. The camera equipment can be employed in novel methods and arrangements for the production of artificial support members. The camera and the flash unit can themselves consist of standard components. An annular flash unit can be mounted between the lens and the reflecting surface/mirror.

DESCRIPTION OF THE FIGURES

A presently proposed embodiment of a method and arrangement according to the invention will be described hereinbelow with reference to the attached drawings, in which:

Figure 1 shows, in a top view, the camera in relation to the lower jaw of a patient,

Figure 2 shows, in a top view, the camera in relation to objects or object parts on a model,

Figure 3 shows a photograph taken with the camera according to Figures 1 and 2, in which photograph there are two images of two given discrete points, and

Figure 4 shows, in longitudinal section, the optical ray path in the camera where reflecting surfaces are used to obtain virtual lens functions arranged at a distance from one another for achieving the stereo imaging effect.

DETAILED EMBODIMENT

In Figure 1, a camera housing is indicated by 1. Arranged in the camera housing is a lens system

comprising a lens 2 which is of a type known per se. Also included in the camera housing is an arrangement for a film 3 which is disposed and can be advanced on film spools 4 and 5. The film is acted on so as to be placed with great precision in a plane 6 at the back of the camera. The action is effected by means of a glass plate 7 which is arranged against the film so that the latter assumes its position in the plane 6 with the precision mentioned above. Arranged at the opening 8 of the camera housing are first and second reflecting surfaces or mirrors which extend perpendicular to the plane of the figure. The mirrors extend parallel to the longitudinal axis 11 of the camera or the main direction of the camera. The mirroring or reflecting surfaces 9 and 10 can themselves have other orientations, although the parallel orientation shown is preferably used. The camera is aimed at the mouth cavity of a patient, which mouth cavity is represented by a jaw bone 12. In the mouth cavity or in the jaw bone there are teeth 13, 14, 15, an implant 16, dental bridge, etc. The radiation emanating from the imaged area in the mouth cavity is indicated by the lines 17, 18. This optical radiation is reflected on the inner surfaces 9a and 10a of the mirrors before it passes through the lens 2 and reaches the film 3. The arrangement means that two virtual lens functions 19, 20 arise, which in turn means that three image fields appear on the film 3. The first image field is caused by the real lens 2, and the second and third image fields are caused by the virtual lens functions 19 and 20. Three images are thus obtained on the picture and can be compared, for example in computer equipment for determining surfaces of the teeth, the implants, etc. The lens functions are arranged essentially parallel. In this connection, reference is made to the Swedish patent application [lacuna], which has the same filing date as the present Swedish patent application.

The camera is of standard design and is of the type which has been specified above. The miniature camera can be placed at a distance L of about 50 - 100 mm from

the patient's mouth.

Figure 2 shows the camera 1' with the same basic construction as in Figure 1. In this case a prism 21 is used which has two parallel inner walls 21a and 21b which correspond to the reflecting surfaces 9a and 10a indicated in Figure 1. The prism is secured to the camera housing 1a. The same applies to the lens 2', which is secured to the camera housing by means of gluing or equivalent. The securing of the prism 21 to the camera housing 1a is symbolized by a tubular part 22. The camera is provided with an annular flash 23 which is of a type known per se. The flash arrangement is arranged concentrically on the said sleeve-shaped member 22. The radiation 17', 18' enters the free end surface 21c of the prism 21 and is reflected on the said inner surface 21a, 21b before it passes through the lens 2' and reaches the film 3'. The imaging can in this case be carried out on a patient, a model 24, etc.

Figure 3 shows a photograph 25 which comprises three sections 25a, 25b and 25c. The section 25a corresponds to the image, of the actual object or body part, which is effected by the lens 2'. The sections 25b and 25c correspond to the image areas which are generated by the virtual lenses 19 and 20. The said virtual lenses are separated by a distance L' (see Figure 1). The images in the image fields 25b and 25c thus represent the body part or the object seen from two different angles, alpha and beta respectively (see Figure 1). A corresponding point is present in the image field 25a, which point does not, however, need to be used (even though it is possible to do so) in the present case for determining the positions of the relevant objects, surfaces or points thereon.

Figure 4 shows the relevant part of the optical ray path in the novel camera. The reflecting surfaces or the mirrors are shown by 9' and 10', and the virtual lens functions are shown by 19', 20'. The real or actual lens is indicated by 2'' and the film plane by 3a.

The invention is not limited to the embodiment

shown hereinabove by way of example, but instead can be modified within the scope of the attached patent claims and the inventive concept.

PATENT CLAIMS

1. Method for taking pictures of the human body, especially of the mouth cavity (12), or of a model for artificial construction of a tooth (13), dentine, a prosthesis, etc., here called objects, and for taking these pictures from at least two different angles, for example stereophotography, photography for three-dimensional measurement, etc., by means of camera equipment or other picture-taking equipment which comprises a housing for image-recording material, for example film (3), video, etc., and a lens system (2), and which, when photographs are being taken, is aimed at one or more relevant objects or object parts (implant (16), tooth remnant, tooth, etc.), characterized in that optical radiation (17, 18) emanating from a respective object or object part is reflected on one or more radiation-reflecting and preferably essentially parallel reflection surfaces (9, 9a and 10, 10a), which are situated between the respective object or object part and the lens system, before passing through the lens system (2) to the image-recording material (3) in the housing in order to obtain at least two lens functions (19, 20) which are situated at a distance from one another and of which at least one is virtual, with which lens functions at least two different images (A, B) of the respective object or object part are generated simultaneously from the said different angles at one and the same exposure.

2. Method according to Patent Claim 1, characterized in that the said optical radiation from the respective object or object part is made to pass an end surface (21c) on a unit (21) which is provided with one or more inner walls (21a, 21b) which each form a reflection surface (9a or 10a).

3. Camera (1) for carrying out the method according to Patent Claim 1 for stereophotography of tooth/teeth replacements or objects/object parts associated with the human body (12) and comprising a camera housing for film (3) and lens system (2), characterized in that it is

arranged with one or more reflection surfaces (9, 10) situated between the said lens system (2) and the respective object/object part or tooth/tooth replacement, in that the reflection surface(s) reflect(s) optical radiation (17', 18') emanating from the respective object or tooth/tooth replacement (16, 16'), or part thereof, before the optical radiation passes through the lens system (2') and reaches the film (3'), and in that the reflection surface or the reflection surfaces is/are arranged to establish at least two lens functions (19', 20') which are situated at a distance from one another and of which at least one lens function is virtual, which said lens function produces, on the film, images from different angles at one and the same exposure.

4. Camera according to Patent Claim 3, characterized in that the reflection surfaces (9a, 10a) are two in number, in that the reflection surfaces extend essentially parallel to the viewing direction (11) of the camera, and in that in this way three images of the respective object (13, 14, 15, 16) or tooth/tooth replacement, or part thereof, are obtained on the film (3) during one and the same exposure, by means of the fact that two virtual lens functions (19, 20) arise together with the lens function (2) performed by the said lens system.

5. Camera according to Claim 3 or 4, characterized in that it consists of a standard camera (1) provided with a flash function, for example a 35-mm miniature camera with a 24-mm wide-angle lens, provided with the said reflection surface(s) (9a, 10a) or mirror surface(s).

6. Camera according to any one of Claims 3, 4 or 5, characterized in that the real lens (2, 2') is arranged in a fixed manner on the camera housing (1a), for example by means of glue, in order to obtain optical and geometric stability, and in that members, for example a glass disc (7), with reference markings, are arranged in order to ensure that the film is applied with great precision to a plane surface and does not deviate from

the latter by more than ± 0.1 mm.

7. Camera according to any one of Patent Claims 3 to 6, characterized in that each reflection surface (9a, 10a) is situated on a prism body (21) which is mounted on the camera opening (8), which body (21) supports the reflection surface or the reflection surfaces on one or more inner walls, and via which body the optical radiation (17, 18) passes through an end surface (21c) which is directed towards the respective object/object part or tooth/tooth replacement (part) (13, 14, 15, 16).

8. Camera according to any one of Patent Claims 3 to 7, characterized in that the arrangement with the camera and the reflection surface(s)/mirror(s) is designed to image areas of the order of magnitude of 50 x 100 mm and to operate at a distance (L, L') from the respective object/object part or tooth/tooth replacement (part) which is of the order of magnitude of 50 - 100 mm, and in that the imaging can take place at a scale of 1:4.

9. Camera according to any one of Patent Claims 3 to 8, characterized in that the error in the imaging of the respective object/object part or tooth/tooth replacement (part) is of the order of magnitude of ± 0.02 mm for distinct points.

10. Camera according to any one of Patent Claims 3 to 9, characterized in that the camera is calibrated with an accuracy which lies in the region of 0.005 mm (on the image scale).

Fig. 1

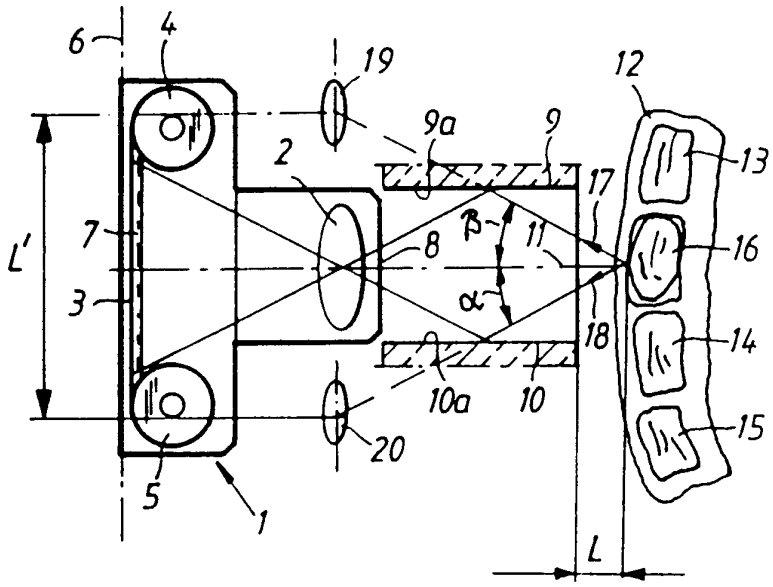
6
4
19
12
9a
9
2
17
13
7
8
β
11
16
L'
3
α
18
14
10a
10
20
15
5
1
L

Fig. 2

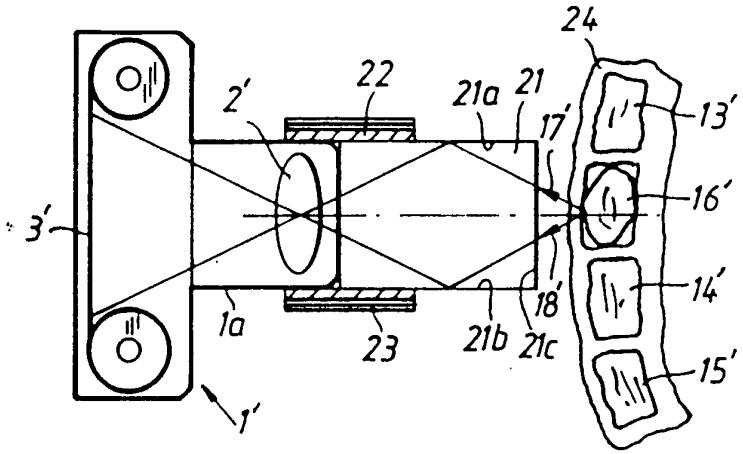
24
22
2'
21a
21
17'
13'
16'
3'
14'
1a
18'
23
21b
21c
15'
1'

Fig. 3

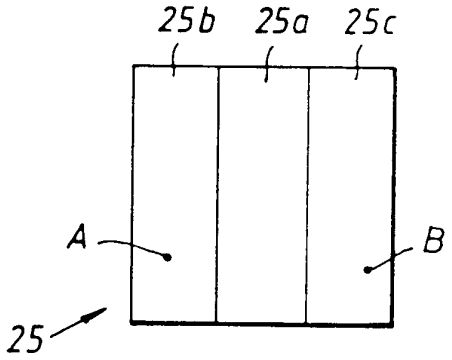

Fig. 4

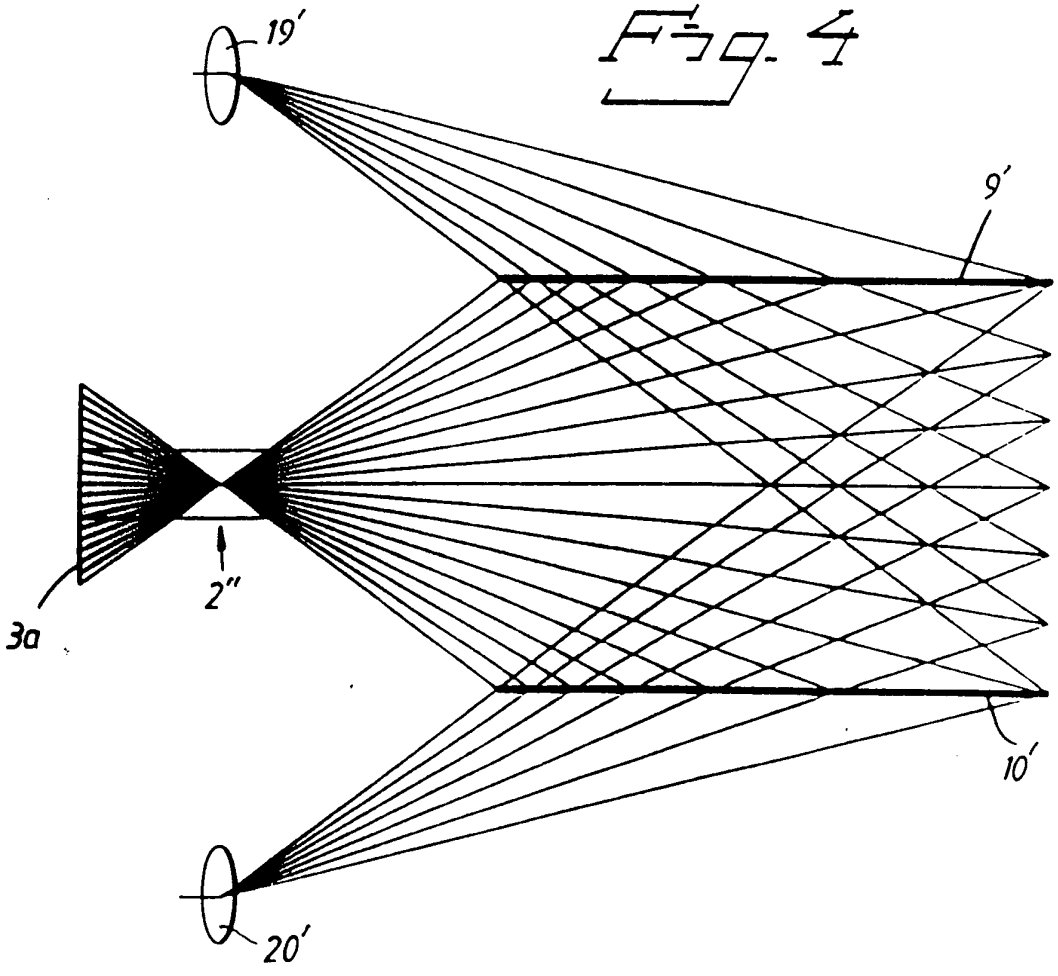

INTERNATIONAL SEARCH REPORT

International application No.
PCT/SE 94/01143

A. CLASSIFICATION OF SUBJECT MATTER

IPC6: G03B 35/10, A61C 19/04
According to International Patent Classification (IPC) or to both national classification and IPC

B. FIELDS SEARCHED

Minimum documentation searched (classification system followed by classification symbols)

IPC6: G03B, A61C

Documentation searched other than minimum documentation to the extent that such documents are included in the fields searched

SE,DK,FI,NO classes as above

Electronic data base consulted during the international search (name of data base and, where practicable, search terms used)

C. DOCUMENTS CONSIDERED TO BE RELEVANT

Category*	Citation of document, with indication, where appropriate, of the relevant passages	Relevant to claim No.
X	DE, C, 186486 (KARL LENCK & VOIGT GMBH & CO), 4 July 1907 (04.07.07)	1-4
A	--	5-10
A	WO, A1, 9113586 (COMDENT GMBH), 19 Sept 1991 (19.09.91), abstract	1-10
A	--	1-10
A	DE, C, 880851 (OTTO VIERLING), 25 June 1953 (25.06.53)	1-10
A	--	1-10
A	WO, A1, 9102496 (BERGMAN, MAUD), 7 March 1991 (07.03.91), abstract	1-10
	--	

[X] Further documents are listed in the continuation of Box C. [X] See patent family annex.

* Special categories of cited documents:
"A" document defining the general state of the art which is not considered to be of particular relevance
"E" erlier document but published on or after the international filing date
"L" document which may throw doubts on priority claim(s) or which is cited to establish the publication date of another citation or other special reason (as specified)
"O" document referring to an oral disclosure, use, exhibition or other means
"P" document published prior to the international filing date but later than the priority date claimed
"T" later document published after the international filing date or priority date and not in conflict with the application but cited to understand the principle or theory underlying the invention
"X" document of particular relevance: the claimed invention cannot be considered novel or cannot be considered to involve an inventive step when the document is taken alone
"Y" document of particular relevance: the claimed invention cannot be considered to involve an inventive step when the document is combined with one or more other such documents, such combination being obvious to a person skilled in the art
"&" document member of the same patent family

Date of the actual completion of the international search	Date of mailing of the international search report
14 March 1995	20 -03- 1995
Name and mailing address of the ISA/ Swedish Patent Office Box 5055, S-102 42 STOCKHOLM Facsimile No. +46 8 666 02 86	Authorized officer Björn Kallstenius Telephone No. +46 8 782 25 00

INTERNATIONAL SEARCH REPORT

International application No.
PCT/SE 94/01143

C (Continuation). DOCUMENTS CONSIDERED TO BE RELEVANT

Category*	Citation of document, with indication, where appropriate, of the relevant passages	Relevant to claim No.
A	WO, A1, 9014803 (LINDQVIST, BERIT ET AL), 13 December 1990 (13.12.90), abstract ---	1-10
A	SE, B, 468462 (LINDQVIST, BERIT ET AL), 31 May 1989 (31.05.89), abstract ---	1-10
A	DE, A1, 3829925 (KALTENBACH & VOIGT GMBH & CO.), 15 March 1990 (15.03.90) --- --------	1-10

INTERNATIONAL SEARCH REPORT

Information on patent family members

25/02/95

International application No.
PCT/SE 94/01143

Patent document cited in search report	Publication date	Patent family member(s)	Publication date
DE-C- 186486	04/07/07	NONE	
WO-A1- 9113586	19/09/91	DE-D- 59008269	00/00/00
		EP-A,B- 0519915	30/12/92
		JP-T- 6503723	28/04/94
DE-C- 880851	25/06/53	NONE	
WO-A1- 9102496	07/03/91	AU-A- 6153190	03/04/91
		CA-A- 2064790	18/02/91
		EP-A- 0591135	13/04/94
		JP-T- 4507358	24/12/92
		SE-B,C- 465498	23/09/91
		SE-A- 8902765	18/02/91
		US-A- 5320462	14/06/94
WO-A1- 9014803	13/12/90	AU-A- 5925990	07/01/91
		EP-A,B- 0474776	18/03/92
		SE-B,C- 468462	25/01/93
		SE-A- 8901959	08/01/91
		US-A- 5262835	16/11/93
SE-B- 468462	31/05/89	AU-A- 5925990	07/01/91
		EP-A,B- 0474776	18/03/92
		SE-A- 8901959	08/01/91
		US-A- 5262835	16/11/93
		WO-A- 9014803	13/12/90
DE-A1- 3829925	15/03/90	CH-A- 680187	15/07/92
		FR-A- 2635965	09/03/90
		JP-A- 2119858	07/05/90
		SE-B,C- 468971	26/04/93
		SE-A- 8902748	03/03/90
		US-A- 5372502	13/12/94