G. W. FOLLICK.

COMBINATION LOCK.

APPLICATION FILED DEC. 12, 1917.

1,307,194.

Patented June 17, 1919.

Fig. 1.

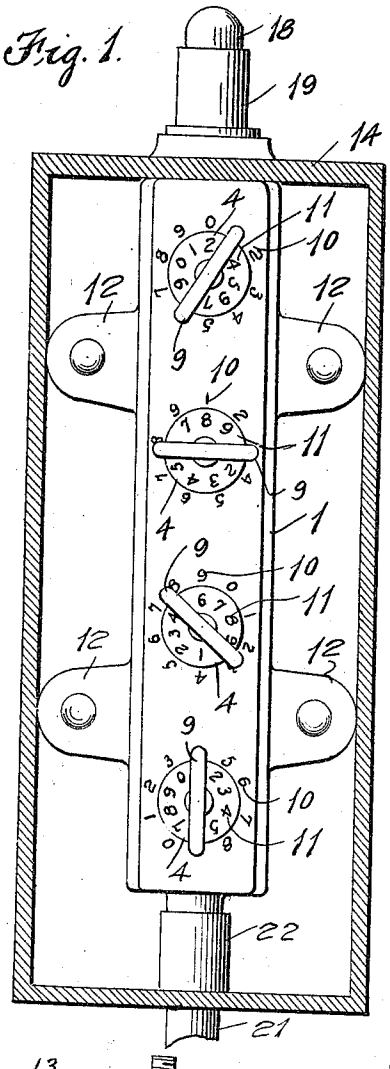

Fig. 2.

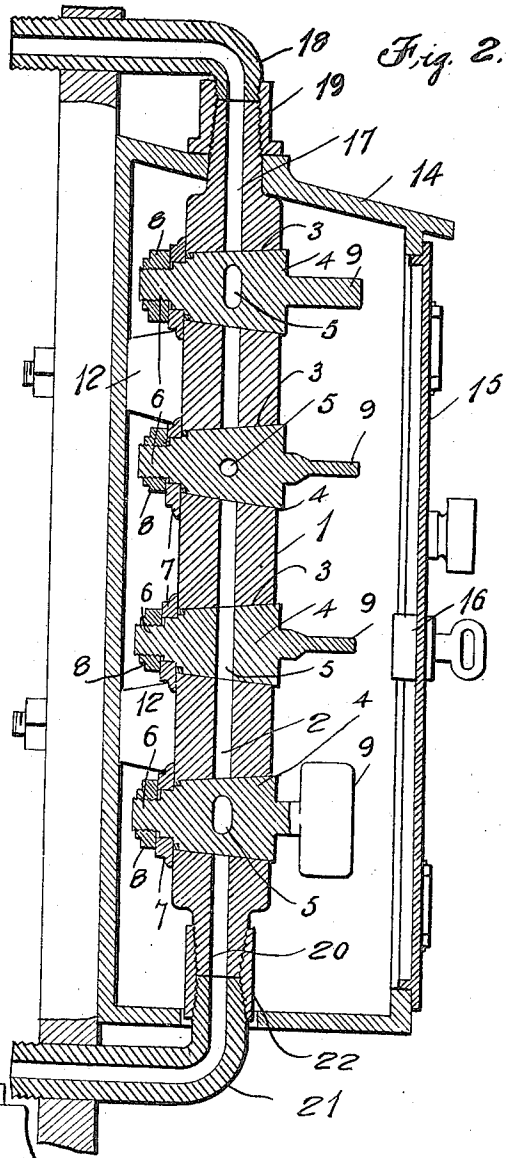

Fig. 3.

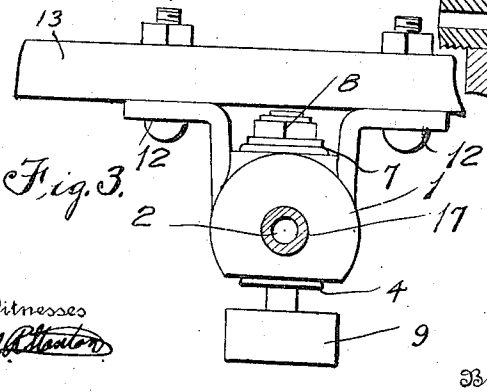

Witnesses

E. A. Atterton

Wm. F. Davidson

Inventor

G. W. Follick.

By A. Randolph Jr.

Attorney

THE NORRIS PETERS CO., PHOTO-LITHO., WASHINGTON, D. C.

UNITED STATES PATENT OFFICE.

GEORGE W. FOLLICK, OF BUFFALO, NEW YORK.

COMBINATION-LOCK.

1,307,194. Specification of Letters Patent. Patented June 17, 1919.

Application filed December 12, 1917. Serial No. 206,801.

To all whom it may concern:

Be it known that I, GEORGE W. FOLLICK, a citizen of the United States, residing at Buffalo, in the county of Erie and State of New York, have invented certain new and useful Improvements in Combination-Locks; and I do hereby declare the following to be a full, clear, and exact description of the invention, such as will enable others skilled in the art to which it appertains to make and use the same.

This invention relates to improvements in combination locks for controlling fluid especially adapted for use on automobiles to control the supply of gasolene to the engine and has for one of its objects the provision of a device of this character, which is adapted for application between the supply source and the engine so that it is necessary that the combination be properly actuated before the fuel may enter the engine, thus preventing a person unfamiliar with the combination from starting the engine.

Another object of this invention is the provision of a body adapted to be connected to a supply source and to a device that receives the contents of the supply source and is provided with a plurality of valves, which valves have to be correctly manipulated before the liquid or fuel may pass into the device that is adapted to receive it from the supply source.

A further object of this invention is the provision of a combination lock of the above stated character, which will be simple, durable and efficient, and which may be manufactured and sold at a comparatively low cost.

With these and other objects in view as will become more apparent as the description proceeds, the invention consists in certain novel features of construction, combination and arrangement of parts as will be hereinafter more fully described and claimed.

For a complete understanding of my invention, reference is to be had to the following description and accompanying drawings, in which:—

Figure 1 is a front elevation of the combination lock having the door of the casing removed and which is constructed in accordance with my invention,

Fig. 2 is a vertical sectional view of the same,

Fig. 3 is a top plan view of the lock.

Referring in detail to the drawing, the numeral 1 indicates an elongated body having a bore or passage 2 extending therethrough. The body is provided with a plurality of spaced tapered openings 3 to receive conical members 4. The members 4 are provided with ports or passages 5 extending therethrough, which are adapted to be brought into registration with the passage or bore 2 of the body 1, and which can be readily brought out of registration therewith for the purpose of closing the bore 2. The members 3 have formed upon one of their ends screw threaded extensions 6 upon which are positioned washers 7 that abut the body and are held in tight engagement therewith by means of nuts 8 threaded to the extensions 6, whereby the members 4 are held within the conical openings 3. The members 4 have formed upon their other ends finger grips or handles 9 for the purpose of turning the members 4 so that the passages 5 thereof may be moved into and out of registration with the passage or bore 2 of the body 1. To aid the operator in correctly manipulating the members 4 so that their passages 5 may be readily brought into registration with the bore or passage 2 of the body 1, a series of characters 10 are arranged upon the body 1 in circular formation about the members 4 and coöperate with the characters 11 upon the ends of the members 4, so that upon moving certain characters in alinement with each other, the passages 5 of the members 4 will be brought into proper alinement with the bore or passage 2 of the member 1.

The member 1 has formed thereon oppositely disposed attaching legs 12 which are secured in any desired manner to the rear wall 13 of the casing 14. The casing 14 has its front wall closed by a door 15 which may be locked in a closed position by a suitable lock 16. The upper end of the body 1 is reduced to form a screw threaded extension 17 that extends through the top wall of the casing 14 and has connected thereto a pipe 18 by means of a coupling 19. The pipe 18 may be connected to a suitable supply source such as a gasolene tank or the like. The lower end of the body 1 is reduced and screw threaded as illustrated at 20 to which is connected a pipe 21 by means of a coupling 22. The pipe 21 may be connected to a carbureter of an engine or to any device that is adapted to receive the contents of the supply source.

The pipes 21 and 18 are bent at right angles and extend through the openings in the support for the casing which may be the instrument board of the automobile.

To apply my invention to an automobile, the casing 14 is secured to any desired point upon the automobile and the pipe 18 is connected to the usual gasolene supply tank, while the pipe 21 is connected to the carbureter of the engine. To prevent theft of the automobile or starting of the engine, the members or valves 4 are so manipulated as to bring the passages 5 thereof out of registration with the bore or passage 2 of the member 1, thus cutting off the supply of fuel to the engine. To further lock the device, the door 15 is moved to a closed position and the lock 16 is actuated to lock the door in a closed position. To start the engine to which my invention is connected, the door 15 is unlocked and the operator then turns the valves or members 4 to their correct position by being familiar with the characters 10 and 11, the port or passage 2 of the body is then open throughout its length permitting the fuel from the supply tank to pass into the carbureter of the engine.

From the foregoing description, taken in connection with the accompanying drawing, it will be noted that a device has been provided which can be readily and conveniently applied to an automobile for the purpose of controlling the fuel to the engine, but, however, I do not wish to limit myself to the application of my invention to an automobile as the same can be readily and conveniently applied to various other devices where it is desired to control the supply from a supply tank or reservoir.

While I have shown and described the preferred embodiment of my invention, it will be understood that minor changes in construction, combination and arrangement of parts may be made without departing from the spirit and scope of the invention as claimed.

Having thus described my invention what I claim is:

1. A device of the character described comprising a casing having alining openings in opposite sides thereof, a body portion having a passage extending therethrough, brackets secured to said casing and supporting said body portion within said casing, valve plugs traversing the passage of said body portion, the outer faces of said valve plugs and the adjacent portions of said body portion having characters thereon, winged handles secured to the outer faces of the valve plugs, one end portion of said body portion extending through one of the openings of said casing, and L-shaped inlet and outlet pipes connected to said body portion.

2. A device of the character described comprising a casing having alining openings therein and a door, a body portion disposed within said casing, brackets secured to said casing and supporting said body portion, a plurality of manually operated valves mounted on said body portion, one end portion of said body portion extending through one of the openings of said casing, L-shaped inlet and outlet pipes, and couplings adapted to secure the opposite end portions of said body portion to said L-shaped inlet and outlet pipes, said casing being adapted to be mounted on the dash board of a vehicle, whereby said L-shaped inlet and outlet pipes will extend therethrough.

In testimony whereof I affix my signature in presence of two witnesses.

GEORGE W. FOLLICK.

Witnesses:
JOHN E. HOFFMAN,
EDWARD OVENS.

Copies of this patent may be obtained for five cents each, by addressing the "Commissioner of Patents, Washington, D. C."