Dec. 5, 1939. F. P. GOHOREL 2,182,119

REMOTE CONTROL SYSTEM

Original Filed Oct. 7, 1936

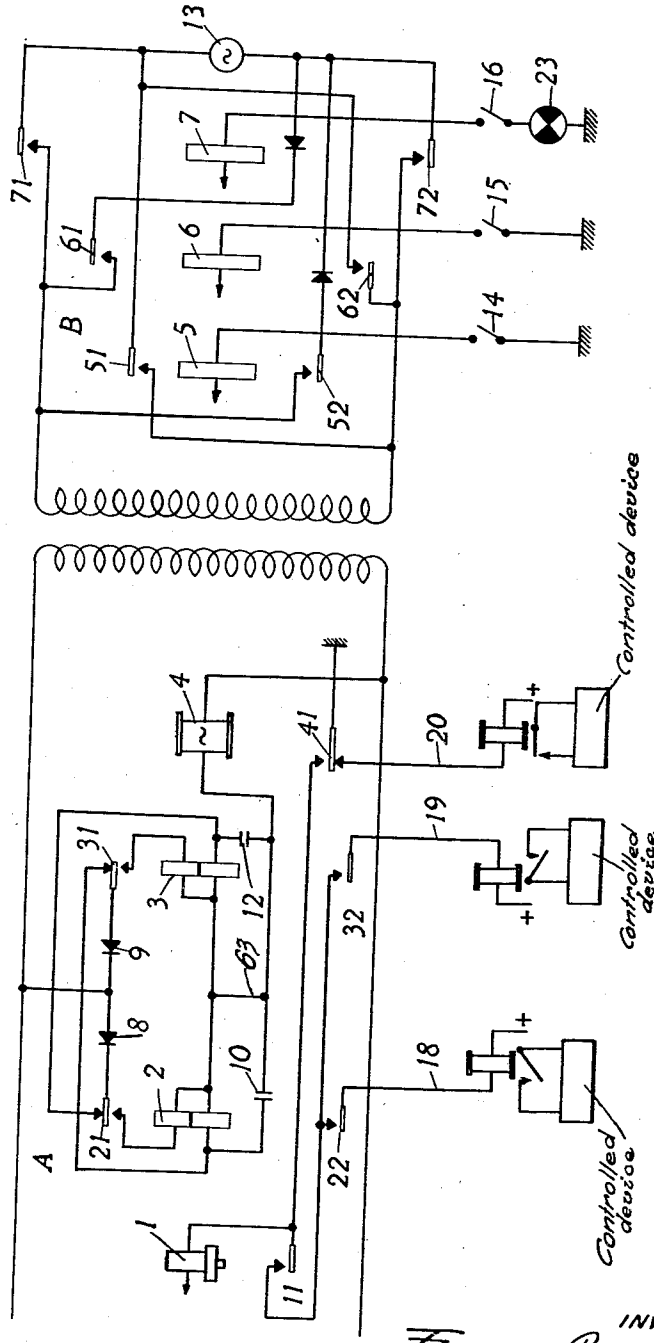

INVENTOR
Fernand Pierre Gohorel
BY
Stone, Bogan & Hack
ATTORNEYS

Patented Dec. 5, 1939 2,182,119

UNITED STATES PATENT OFFICE

2,182,119

REMOTE CONTROL SYSTEM

Fernand Pierre Gohorel, Antony, France, assignor to Compagnie des Telephones Thomson-Houston, Paris (Seine) France, a French company

Original application October 7, 1936, Serial No. 104,560. Divided and this application July 1, 1937, Serial No. 151,537. In France October 19, 1935

3 Claims. (Cl. 177—353)

This invention relates to remote control systems and more particularly to remote control systems of the type disclosed in my co-pending application Serial No. 104,560, filed October 7, 1936, of which the present application is a division.

One of the features of the present invention resides in a remote control system in which pulsations, that is, trains of alterations, of alternating current are received at a control station by means responsive to alternating current which effect a control selectively in accordance with the direction of the first half-cycle received, and in accordance with the duration of the pulsations. Means are also provided at the controlled station responsive to half-cycles of a direction opposite to that of the first half-cycle received, for maintaining the control established by said first half-cycle.

The provision of transformers in a remote control or signalling system is not in itself a feature of the present invention. On the contrary, it is due to the fact that transformers are necessary in telephone systems and like remote control or signalling systems that it is necessary to operate such systems with alternating current. Thus the object of the invention is to provide a remote control or signalling system which will operate over existing systems including transformers operating with alternating current, such as for operating control equipment in automatic or semi-automatic telephone systems.

Other features of the invention will be apparent from the following description. The accompanying drawing illustrates, by way of non-limiting example, one embodiment of the invention.

In the layout of the receiving station shown in the drawing, in the state of rest, two receiving circuits each comprising a rectifier and a control relay in series are connected to the control circuit through the winding of an alternating current relay 4, the function of which will be referred to hereinafter. The rectifiers, indicated by 8 and 9, are arranged so that the currents which are capable of traversing them are of opposite directions. The relays, indicated by 2 and 3, each have two windings.

Means are provided at the control station for selectively controlling the initial direction of the first alternation of pulsations of alternating current received at the controlled station. Suitable means for this purpose may include an alternating current generator, two devices which pass current in one direction only such as rectifiers, and two interrupters. The rectifiers are arranged so that the current which is capable of traversing one is of the opposite direction to that which is capable of traversing the other. Such means are described in greater detail in my co-pending application Serial No. 104,560. A transformer is provided either at the control station or at the controlled station.

On the reception at the controlled station of a pulsation of alternating current, the first half-cycle of the first alternation received will traverse one or other of the rectifiers and one or other of the control relays. Assuming that the control relay 3 is excited through its lower winding, the said relay on responding breaks by means of its armature 31 the circuit of the lower winding of the relay 2. At the same time the relay 3 by means of its armature 31 closes the circuit of its upper winding, the direction of which is such that the flux which it produces for a received current of opposite direction to that which traverses the lower winding has the same direction. The relay 3 will therefore be maintained at response under the action of the alternations received during the whole time that a control is in progress the relay 2 being unable to respond.

The current produced by one half-cycle of an alternation passes through the circuit: transformer, rectifier 8, armature 21 and its resting contact, lower winding of relay 2, wire 63, alternating current relay 4, and transformer. The current produced by the other half-cycle of an alternation passes through: transformer, alternating current relay 4, wire 63, upper winding of relay 3, armature 31 and its working contact, rectifier 9 and transformer.

According to the present invention a time relay 1 is provided which is excited when the relay 4 attracts its armature.

The operation of this receiving equipment will be explained in detail. We shall assume at first that the duration of the impulse received is such that the relay 1 has not the time to actuate its armature.

On the reception of the impulse, the relay 4 attracts its armature and opens its resting contact, causing in the wire 20 a signalling or control. The circuit including the wire 20, may, for example, include a control relay which is adapted to remain in the working condition when the complete control system at the controlled station is at rest. Then, on the reception of a controlling pulsation the relay 4 opens by means of its armature 41 the circuit of a control relay which releases and effects by its armature the desired control or signal.

By means of its armature 41 and its working contact, the relay 4 closes the circuit of the relay 1, which will not attract its armature, as has been explained.

The current impulse causes, on the other hand, the response of one of the relays 2 and 3 (relay 2 for example). Although this relay attracts its armature and closes the controlling working contact by means of its armature 22, the control

circuit being opened by the armature 11 of the relay 1, the control will not be produced.

It is seen that it is thus possible to obtain the sending over the wire 20 of a series of impulses without the circuits connected to the wires 18 and 19 being influenced.

We shall now assume that the current impulse received has a duration which is sufficient for the relay 1 to actuate its armature. When the relay 4 responds, it completes the circuit of the relay 1 which after a certain length of time, actuates its armature 11.

The control circuit of the relay 2 for example is now completed through earth, armature 41 and its working contact, armature 11 and its working contact, armature 22 and its working contact, control wire 18.

When the relay 3 is operated a control is effected through earth, armature 41 and its working contact, armature 11 and its working contact, armature 32 and its working contact, and control wire 19.

It is thus possible to conjugate the control obtained by the response of the relay 4 with the control of one or the other of the relays 2 and 3.

The wires 18 and 19 may be each in series with the winding of a control relay which is normal in the rest condition and operates on the flow of current in the line 18, or in the line 19 as the case may be, thereby effecting the desired control or signal.

Condensers 10 and 10*a* are provided at the terminals of the windings of the relays 2 and 3 respectively so as to improve the operation.

There will now be described an arrangement of the transmitting station B which allows of obtaining the different controls.

Three control relays 5, 6 and 7 may be caused to respond by the operation of one of the interrupters 14, 15 and 16. If the interrupter 16 is closed, the relay 7 responds. By means of its armatures 71 and 72, it connects the two line conductors to the terminals of the alternating current generator 13. A rotary interrupter 23 or any other suitable arrangement limits the time of response of the relay 7 so that the duration of sending of the alternating current impulse is less than the time of operation of the relay 1. In this case, only the relay 4 will be operated at the receiving station.

If one of the interrupters 14 or 15 is operated, it is seen that in this case, according to whether one or the other of the relays 5 or 6 responds, there will be sent into the primary of the transformer positive or negative half-cycles (or vice-versa) which will determine, as has been explained, the direction of the first half-cycle of the first alternation received at the station A and the operation of one or the other of the relays 2 and 3.

It is obvious that the above description has been given only by way of non-limiting example and that, in particular, it is possible to employ at the transmitting station any arrangement which allows of obtaining a certain direction of the first half-alternation received at the receiving station, and to combine several receiving devices connected to the same line and operating for different frequencies, without departing from the present invention.

Means other than those described above may be provided at the controlled station for effecting a control selectively in accordance with the initial direction of the first alternation of a pulsation received by said controlled station. Several different arrangements for this purpose are described in my aforesaid copending application.

I claim:

1. Electric transmission system comprising a control station, a controlled station, a transmission line connecting said stations, a transformer in said transmission line, control means at the controlled station responsive to trains of pulsations of alternating current for initiating a control selectively in accordance with the direction of the first half-cycle of the train of pulsations of alternating current received at said controlled station, means at the controlled station, responsive to half-cycles of a direction opposite to that of the first half-cycle received, for maintaining the control established by the first half-cycle, a time delay relay associated with said control means for completing the control selected when the duration of the train of pulsations exceeds a predetermined value, and a control means at said controlled station responsive to every received train of pulsations regardless of their duration, and means at the control station for selectively controlling the initial direction of the first half-cycle and the duration of the trains of pulsations received at the controlled station.

2. Electric transmission system comprising a control station adapted to emit a train of uni-directional pulsations of current, means at said control station for determining selectively the direction of said uni-directional pulsations of current and the duration of said train, a controlled station, a supply line between said control station and said controlled station, means in said supply line for converting said uni-directional pulsations of current into trains of alternating current control, means at said controlled station, responsive to the alternating current received for initiating a signal selectively in accordance with the direction of the first half-cycle of the alternating current received at said controlled station, means at the controlled station, responsive to half-cycles of a direction opposite to that of the first half-cycle received, for maintaining the control established by the first half-cycle, a time delay relay at said controlled station for completing the signal when the durations of the trains of pulsations are greater than a predetermined value, and means at said controlled station responsive to said alternating current pulsation train irrespective of its duration for completing another signal control.

3. Electric transmission system comprising a control station, a controlled station responsive to pulsations of alternating current, a transmission line connecting said stations, a transformer in said transmission line, two receiving circuits at said controlled station, said receiving circuits each comprising a control relay and a device for passing current in one direction only, said devices being arranged to pass current in opposite directions, and means associated with each relay for preventing, on energisation of the relay with which it is associated, the energisation of the other relay, an alternating current relay in series with said control relays and a time delay relay controlled by said alternating current relay and adapted to close the circuits controlled by said control relays, and means at the control station for selectively controlling the direction of the first half-cycle and the duration of the pulsations received at the control station.

FERNAND PIERRE GOHOREL.