(No Model.) 2 Sheets—Sheet 1.

E. D. WESTON.

HOT WATER HEATER OR BOILER.

No. 456,747. Patented July 28, 1891.

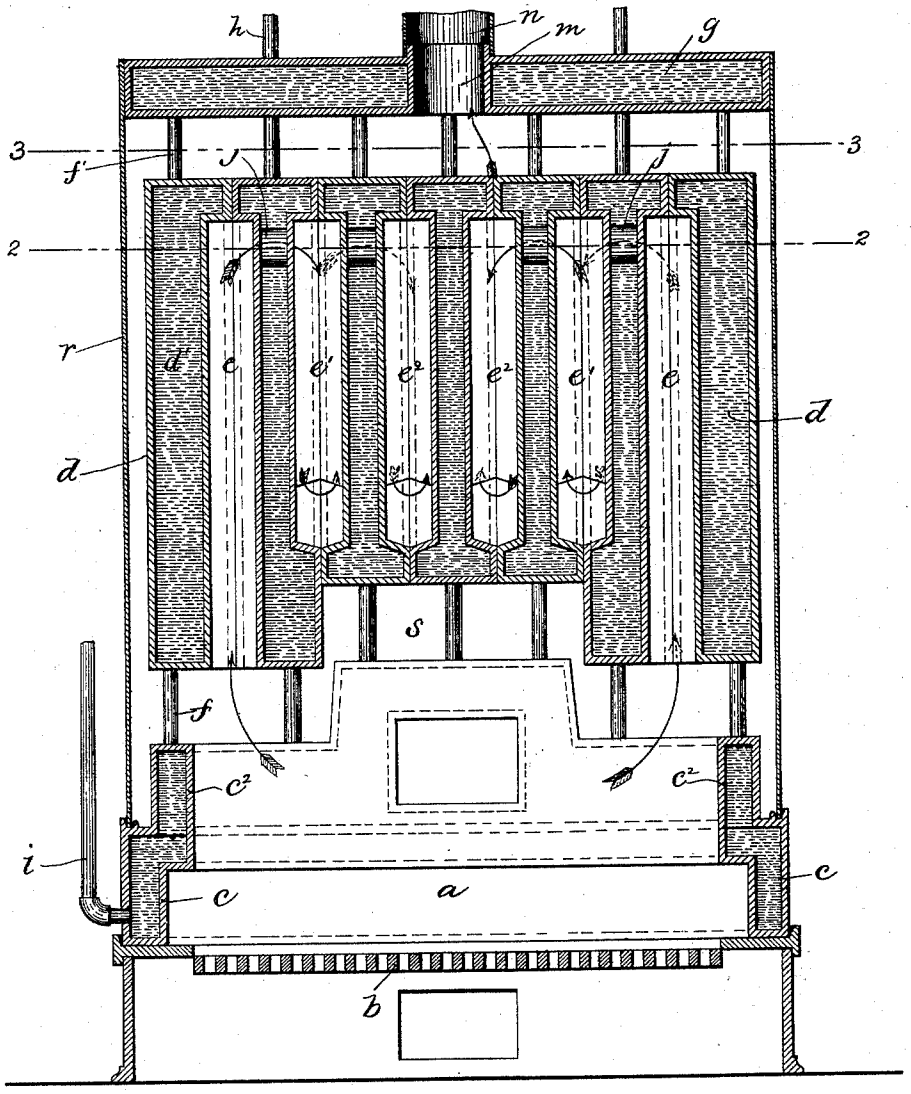

FIG 1

WITNESSES
C. G. Bartlett
Edwin W. Seamlen

INVENTOR
by E. D. Weston.
Wright, Brown & Quinby.
Attys.

THE NORRIS PETERS CO., PHOTO-LITHO., WASHINGTON, D. C.

(No Model.) 2 Sheets—Sheet 2.

E. D. WESTON.

HOT WATER HEATER OR BOILER.

No. 456,747. Patented July 28, 1891.

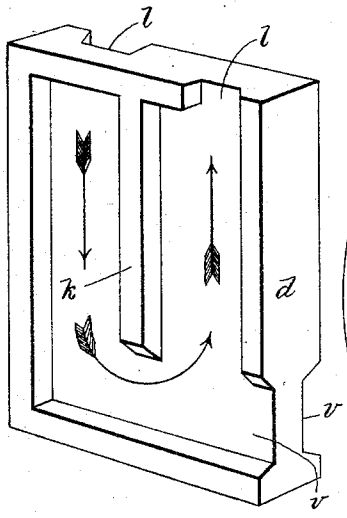

FIG 4

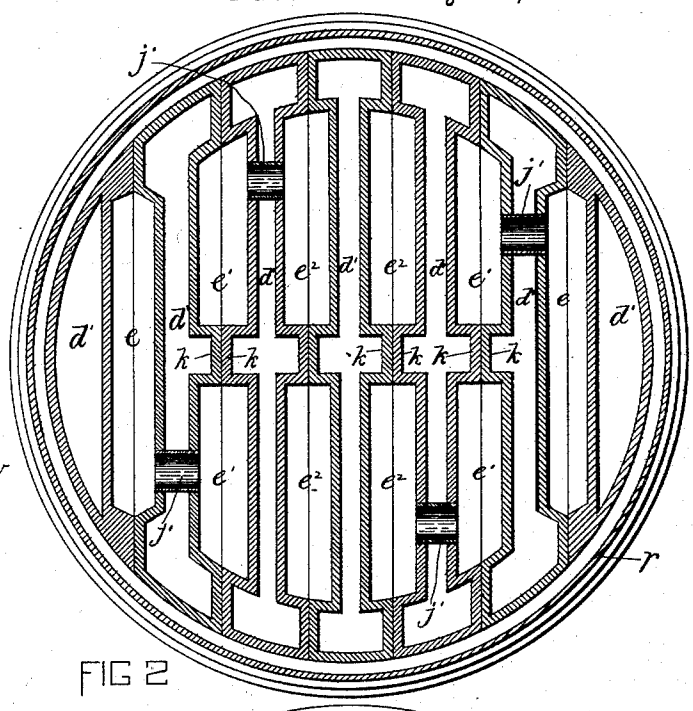

FIG 2

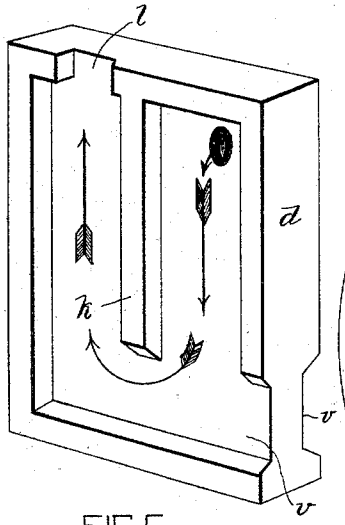

FIG 5

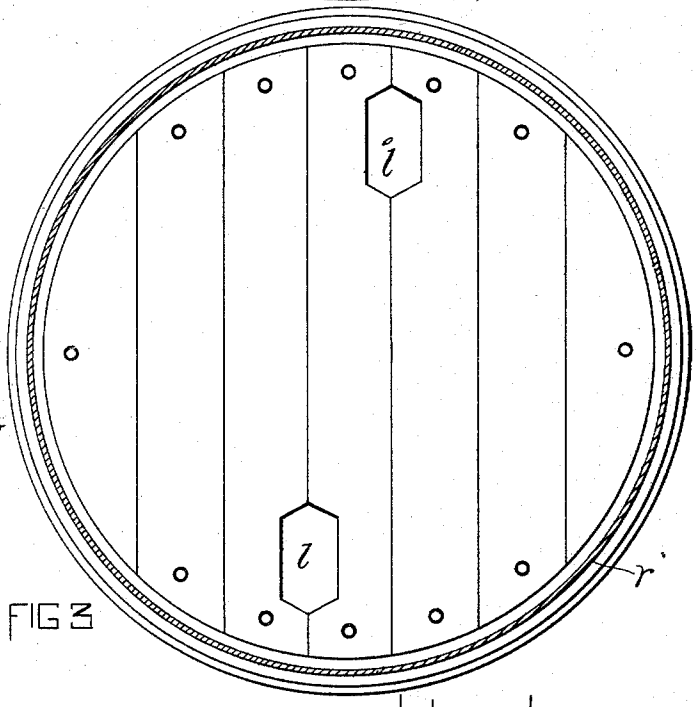

FIG 3

WITNESSES

C. G. Bartlett.

Edward W. Hamlen

INVENTOR

by E. D. Weston.

Wight, Brown & Crossley.

Attys.

THE NORRIS PETERS CO., PHOTO-LITHO., WASHINGTON, D. C.

UNITED STATES PATENT OFFICE.

ERASTUS D. WESTON, OF WAKEFIELD, MASSACHUSETTS.

HOT-WATER HEATER OR BOILER.

SPECIFICATION forming part of Letters Patent No. 456,747, dated July 28, 1891.

Application filed November 19, 1890. Serial No. 371,907. (No model.)

To all whom it may concern:

Be it known that I, ERASTUS D. WESTON, of Wakefield, in the county of Middlesex and State of Massachusetts, have invented certain new and useful Improvements in Hot-Water Heaters or Boilers, of which the following is a specification.

This invention has for its object to provide a simple and efficient apparatus for heating, either by the circulation of hot water or by steam, which shall embody a furnace or fire-box, a series of heating-sections vertically arranged side by side, and vertically ascending and descending flues or passages communicating with the fire-box and extending between the heating-sections, the arrangement being such that the heating-sections present the maximum area of surface to the heated products of combustion passing through said flues, so that the fuel is used economically and to the best advantage.

The invention consists in the improvements which I will now proceed to describe and claim.

In the accompanying drawings, forming a part of this specification, Figure 1 represents a vertical section of a hot-water heater embodying my improvements. Fig. 2 represents a section on line 2 2, Fig. 1. Fig. 3 represents a section on line 3 3, Fig. 1, looking downwardly. Figs. 4 and 5 represent perspective views of two of the sections of my improved hot-water or steam heater.

The same letters of reference indicate the same parts in all the figures.

In the drawings, *a* represents the furnace or fire-box located over the grate *b* and surrounded by the water-leg *c*. Said water-leg is preferably somewhat contracted at its upper portion by an offset c^2 for a purpose presently explained. The feed-opening *c'*, through which fuel is inserted, is made through the front portion of the water-leg. Above the water-leg are located the heating-sections *d d d*. Said sections are formed so that when assembled they collectively constitute a cylinder having water-spaces *d'* and intermediate flues arranged in two series, as presently described, the flues of each series being designated *e e' e²*. The water-space *d'* of each section is entirely separated from the water-space of the adjoining section and communicates at its lower end by means of a pipe *f* with the water-leg and at its upper end by means of a pipe *f'* with a dome or reservoir *g*, from which extend flow-pipes *h*, that conduct the heated water to the radiators, the circulation of the water being from the water-leg upwardly through each heating-section *d* into the dome or reservoir *g*, and from thence to the radiators. The return water from the radiators enters the lower part of the water-leg through suitable return-water pipes *i*. The lower ends of the heating-sections are separated from the upper portion of the water-leg by a space of sufficient height to permit the insertion of the connecting-pipes *f*.

The series of flues *e e' e²* are formed by casting the sections *d* with recesses in proximate sides thereof, the surfaces of said recesses collectively forming the flues, as shown in Figs. 1, 2, 4, and 5. The two outer flues *e* of the series extend down to the lower ends of the sections between which they are formed, and communicate with the space between said sections and the water-leg, so that they receive the heated products of combustion from the fire-box, as indicated by the arrows in Fig. 1.

The intermediate flues *e' e²* terminate short of the lower ends of the sections between which they are formed, so that the products of combustion pass from the space between the sections and water-leg only into the two outer flues *e e*. The upper ends of the outer flues *e e* are connected by horizontal passages *j j*, Figs. 1 and 2, with the two adjacent intermediate flues *e' e'*. Said intermediate flues *e'* and also the flues e^2 are partially subdivided vertically by means of hollow semi-partitions *k*, formed on the recessed sides of the sections *d*, the semi-partition *k* of one section meeting the corresponding semi-partition *k* of the next section, so that the two semi-partitions form an entire partition extending from the upper end of each intermediate flue nearly to the lower end thereof. The semi-partitions do not extend entirely to the lower end of the sections on which they are formed, but terminate above said lower ends, as shown in Figs. 1, 4 and 5, so that spaces exist under their lower ends for the passage of the products of combustion from one of the divisions created in each intermediate flue by said partitions to the other division.

Each of the passages *j j*, above mentioned

as connecting the upper ends of the outer flues e e with the intermediate flues e' e', enters one of the divisions of the intermediate flue with which it is connected, so that the products of combustion passing from the outer flue e pass downwardly through one division of the flue e' and then upwardly through the other division thereof.

The upper portion of each flue e' is connected to the next flue e^2 by means of a passage j', so that the products of combustion, after passing from the flue e', enter the upper portion of one of the divisions of the flue e^2, pass downwardly through the said division, and upwardly through the other division of the same flue.

The flues e^2 e^2 communicate through openings l l, Figs. 3, 4 and 5, with the space between the upper ends of the heating-sections and the dome or reservoir g, so that the heat remaining in the products of combustion is partially utilized in the said reservoir before escaping through a passage m through said reservoir to the outlet flue or pipe n, connected with the chimney.

It will be seen from the foregoing and by reference to the drawings that the heat and products of combustion pass from the fire-box outwardly into the lower ends of the flues e e, upwardly through said flues, then first downwardly and next upwardly through the flues e' e', and then first downwardly and then upwardly through the flues e^2 e^2, and finally emerging through the openings l l pass through the space between the sections and the dome or reservoir g and out of the apparatus through the funnel or flue n.

The form of the heating-sections and flues is such that a very large area of heating-surface is afforded, while the arrangement of the flues causing the products of combustion to repeatedly rise and fall in passing along the series of sections insures a very complete utilization of the heat without materially retarding the draft.

The passages j j j' j' pass through the water-spaces of the sections in which they are formed, and may be cast as parts of said sections.

I do not limit myself to the employment of the particular number of heating-sections here shown, and may use a greater or less number. For example, I may dispense with two of the central sections, using only five, in which case the escape-openings l l would be preferably made at the upper ends of the flues e' e'. It will be noticed that the said escape-openings are located at nearly opposite sides of the apparatus, so that one of the heated currents or streams from the fire-box impinges against the bottom of the dome at or near one edge thereof, while the other current impinges upon the bottom of the dome at or near the opposite edge thereof, thus insuring a nearly uniform action on all parts of the dome.

The central sections d are preferably made shorter than the outer sections, as shown in Fig. 1, so as to form a space s over the central portion of the fire-box, said space being higher than the lower ends of the outer sections, so that the products of combustion impinging against the lower ends of the central sections pass downwardly, as indicated by the arrows in Fig. 1, so that larger areas are exposed to the highly-heated products of combustion than would be the case if all the sections d were of the same length. I do not limit myself, however, to the described relative length of the sections, and may make them all of the same length, if preferred.

r represents a cylindrical casing which surrounds the sections d and dome g, the lower end of said casing resting on the offset or shoulder c^2 of the water-leg.

To permit the cleaning out of the flues, I provide recesses v v, Figs. 4 and 5, in the lower portions of the margins of the sections d, said recesses forming openings, which permit the insertion of a scraper into the flues. The casing r will have openings corresponding to the recesses v v and provided with movable covers.

I do not limit myself in all cases to the employment of the water-leg, it being evident that the return-pipes i might be connected directly to the lower portions of the sections d, there being one or more return-pipes for each section. The water-leg is preferred, however, on account of the greater area of heating-surface it affords. The dome g may also be omitted in a hot-water heater, the flow-pipes h being directly connected to the upper ends of the sections d. I do not recommend the omission of the dome, however, but prefer to use it because of the area of heating-surface which it presents to the products of combustion that have passed through the flues of the heating-sections.

When the apparatus is used for steam heating, the reservoir g is essential as a steam-dome.

I claim—

1. In a hot-water heater or boiler, a structure comprising a series of vertical water-heating sections placed side by side and having their adjacent sides recessed to form vertical flues, which are connected in two series by passages through the inner sections, each series constituting an ascending and descending conduit adapted to conduct the products of combustion from a fire-box below the structure upwardly and downwardly between thin bodies of water in the sections to an outlet above the structure, as set forth.

2. In a hot-water heater or boiler, a series of vertical water-heating sections placed side by side and having their adjacent sides recessed to form flues, which are connected by passages through the inner sections, the intermediate flues, or those which are located between the outer ones, being partially sub-

divided to form descending and ascending passages by partitions formed on the recessed sides of the sections, as set forth.

3. In a hot-water heater or boiler, a series of vertical water-heating sections placed side by side and having their adjacent sides recessed to form flues, the inner sections having passages through their upper portions connecting said flues, and vertical semi-partitions forming ascending and descending passages in said flues, the central sections having outlets at their upper ends communicating with the flues adjoining said sections, as set forth.

4. In a hot-water heater or boiler, the combination, with a furnace or fire-box, of a series of vertical heating-sections arranged side by side over the fire-box and provided with recessed sides forming a series of flues connected by transverse passages through the sections, the outer flues being open at their lower ends to receive products of combustion from the fire-box, while the inner flues are open at their upper ends to deliver the products of combustion to an outlet, and a casing inclosing said series of sections, as set forth.

5. In a hot-water heater or boiler, the combination, with a furnace or fire-box, of a water-leg surrounding the same, a series of vertical heating-sections arranged side by side over the water-leg, and pipes *f f*, connecting the lower ends of said sections with the water-leg, said sections having recessed sides forming flues, transverse passages connecting the flues, and outlets at the upper ends of the inner flues, as set forth.

6. In a hot-water heater or boiler, the combination, with a furnace or fire-box, of a water-leg surrounding the same, a series of vertical heating-sections arranged side by side over the water-leg, pipes *f f*, connecting the lower ends of the sections with the water-leg, said sections having recessed sides forming flues, transverse passages connecting the flues, and outlets at the upper ends of the inner flues, a dome or reservoir above the heating-sections, and pipes *f' f'*, connecting the upper ends of said sections with the dome, as set forth.

7. The combination, with the vertical heating-sections having the connected flues and the outlet-openings at the upper ends of the central flues, of the dome or reservoir located above the sections and separated therefrom by a space communicating with the said outlet-openings, said dome having an opening for the escape of the products of combustion from said space, as set forth.

8. The combination of the fire-box, the water-leg *c*, surrounding the same, and the series of vertical heating-sections placed side by side above the water-leg, said sections having recessed sides forming two series of flues, which are connected at their upper ends by horizontal passages through the sections, the outer flues of the series communicating at their lower ends with the space above the water-leg, while the inner flues communicate at their upper ends with an outlet pipe or passage, as set forth.

9. The combination of the fire-box, the water-leg *c*, surrounding the same, the series of vertical heating-sections placed side by side above the water-leg, the lower ends of the central sections being arranged above the lower ends of the outer sections, said sections having vertical flues, passages connecting said flues, and outlets at the upper ends of the central flues, the outer flues communicating with the space above the water-leg, as set forth.

10. The combination of a fire-box, a water-leg surrounding the same, a casing surrounding the water-leg and extending upwardly therefrom, a dome or reservoir in the upper portion of said casing, a series of heating-sections located in said casing between the said water-leg and dome, connections between said sections and the water-leg and dome, whereby an upward circulation of water is permitted from the water-leg to the dome through the sections, said sections having recessed sides forming flues, the outer ones of which communicate at their lower ends with the space between the sections and water-leg, while the inner ones communicate at their upper ends with the space between the sections and dome, the flues between the outer ones being vertically subdivided into descending and ascending passages, the ascending passages of the divided flues being connected with the descending passages of the succeeding flues by horizontal passages through the sections, as set forth.

11. A water-heating section having recesses in its vertical sides, hollow vertical ribs *k*, extending from the upper ends of said recesses partly but not entirely to the lower ends thereof, whereby when two sections are assembled a flue is formed between them having an ascending and a descending passage, said section having also a horizontal passage through its upper portion connecting the ascending passage at one side of the section with the descending passage at the other side, as set forth.

In testimony whereof I have signed my name to this specification, in the presence of two subscribing witnesses, this 10th day of November, A D. 1890.

E. D. WESTON.

Witnesses:
C. F. BROWN,
EWING W. HAMLEN.