Jan. 19, 1932. A. S. KUX 1,841.411

AUTOMATIC SANDING OR POLISHING MACHINE

Filed April 24, 1930 5 Sheets-Sheet 1

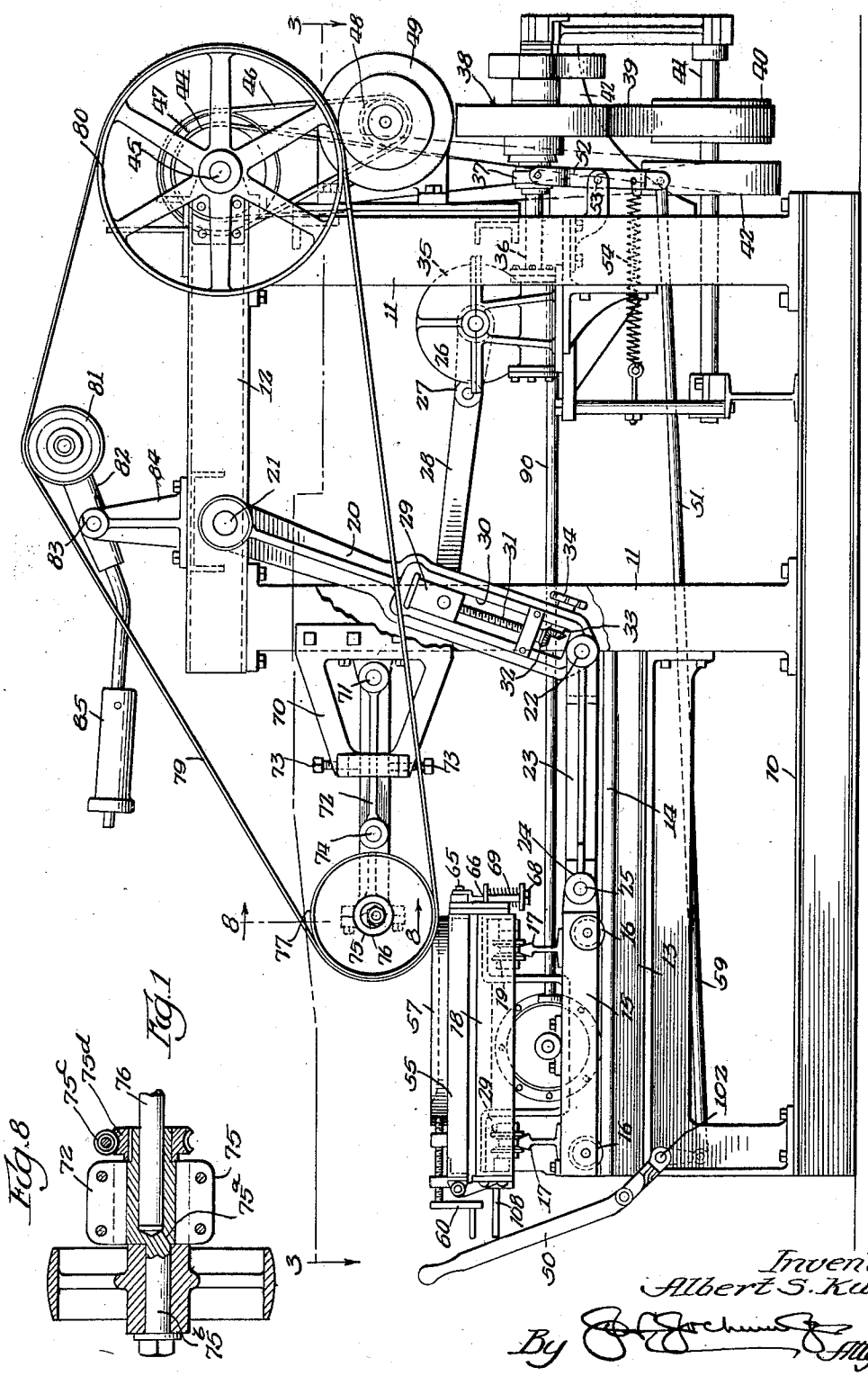

Fig. 1

Fig. 8

Inventor
Albert S. Kux
By [illegible] Atty.

Jan. 19, 1932. A. S. KUX 1,841,411

AUTOMATIC SANDING OR POLISHING MACHINE

Filed April 24, 1930 5 Sheets-Sheet 2

Fig. 2

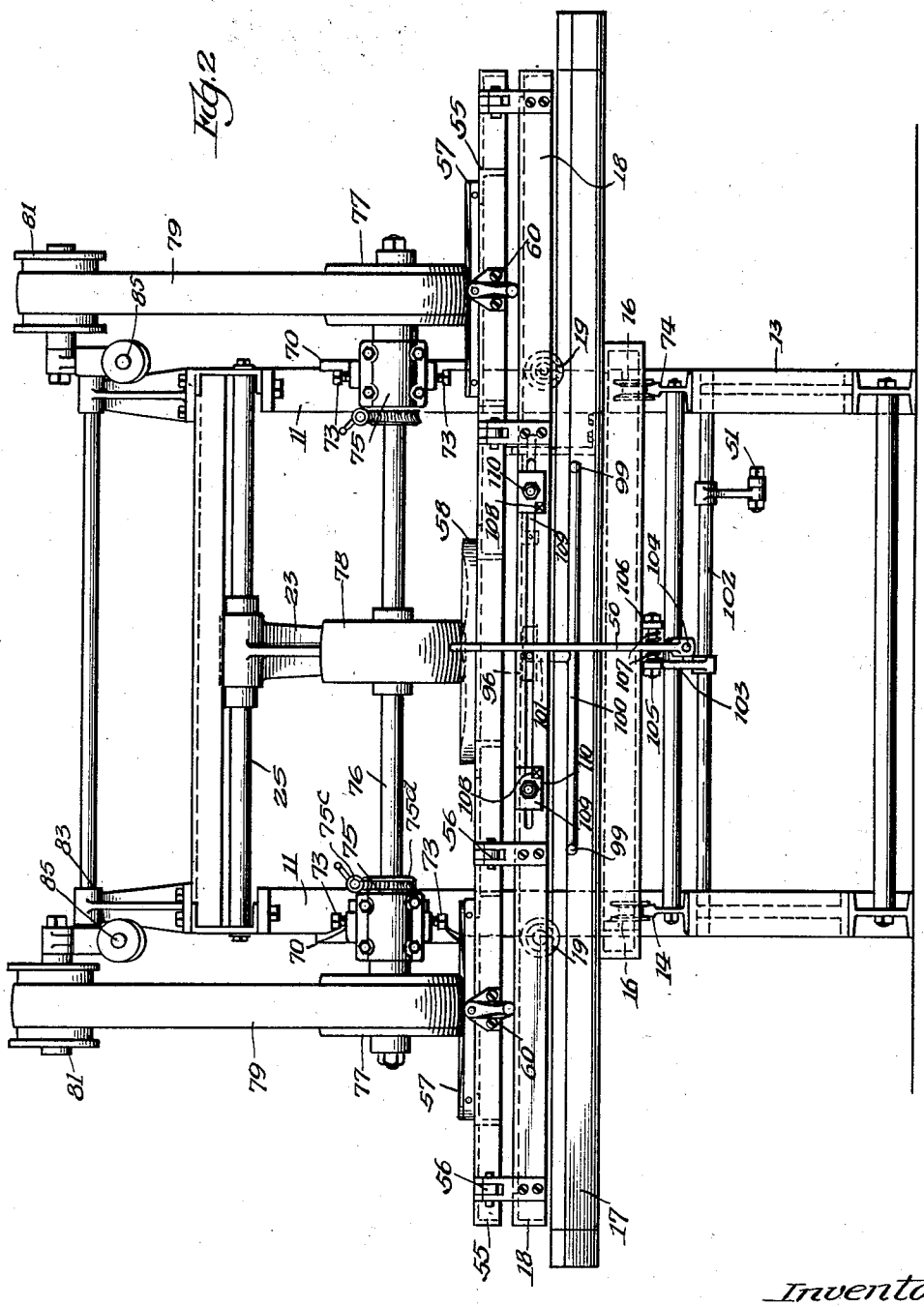

Inventor
Albert S. Kux
By [signature] Atty.

Jan. 19, 1932. A. S. KUX 1,841,411

AUTOMATIC SANDING OR POLISHING MACHINE

Filed April 24, 1930 5 Sheets-Sheet 3

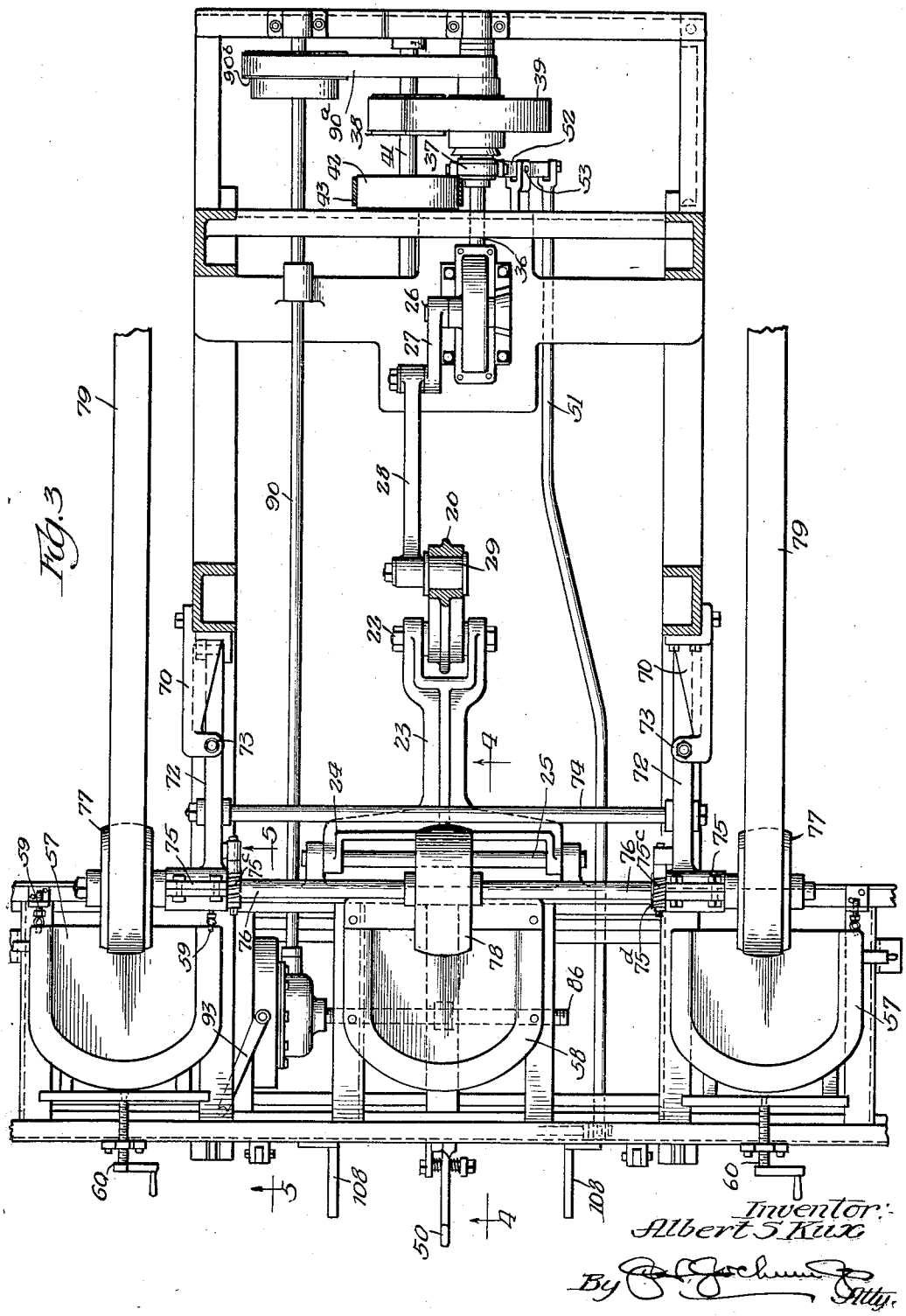

Fig. 3

Inventor:
Albert S. Kux
By [signature] Atty.

Jan. 19, 1932. A. S. KUX 1,841,411

AUTOMATIC SANDING OR POLISHING MACHINE

Filed April 24, 1930 5 Sheets-Sheet 4

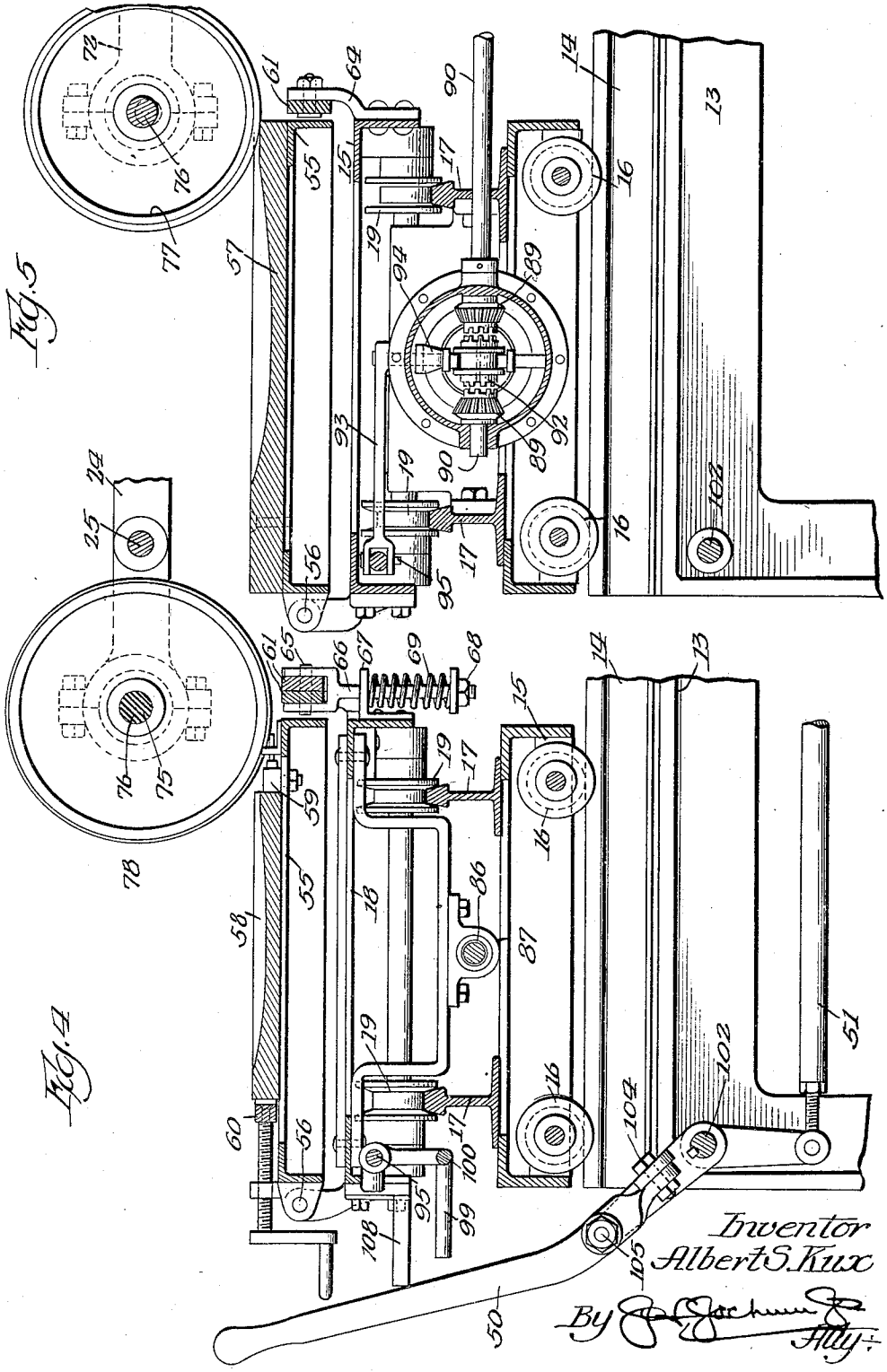

Fig. 5

Fig. 4

Inventor
Albert S. Kux
By
Atty.

Jan. 19, 1932. A. S. KUX 1,841,411

AUTOMATIC SANDING OR POLISHING MACHINE

Filed April 24, 1930 5 Sheets-Sheet 5

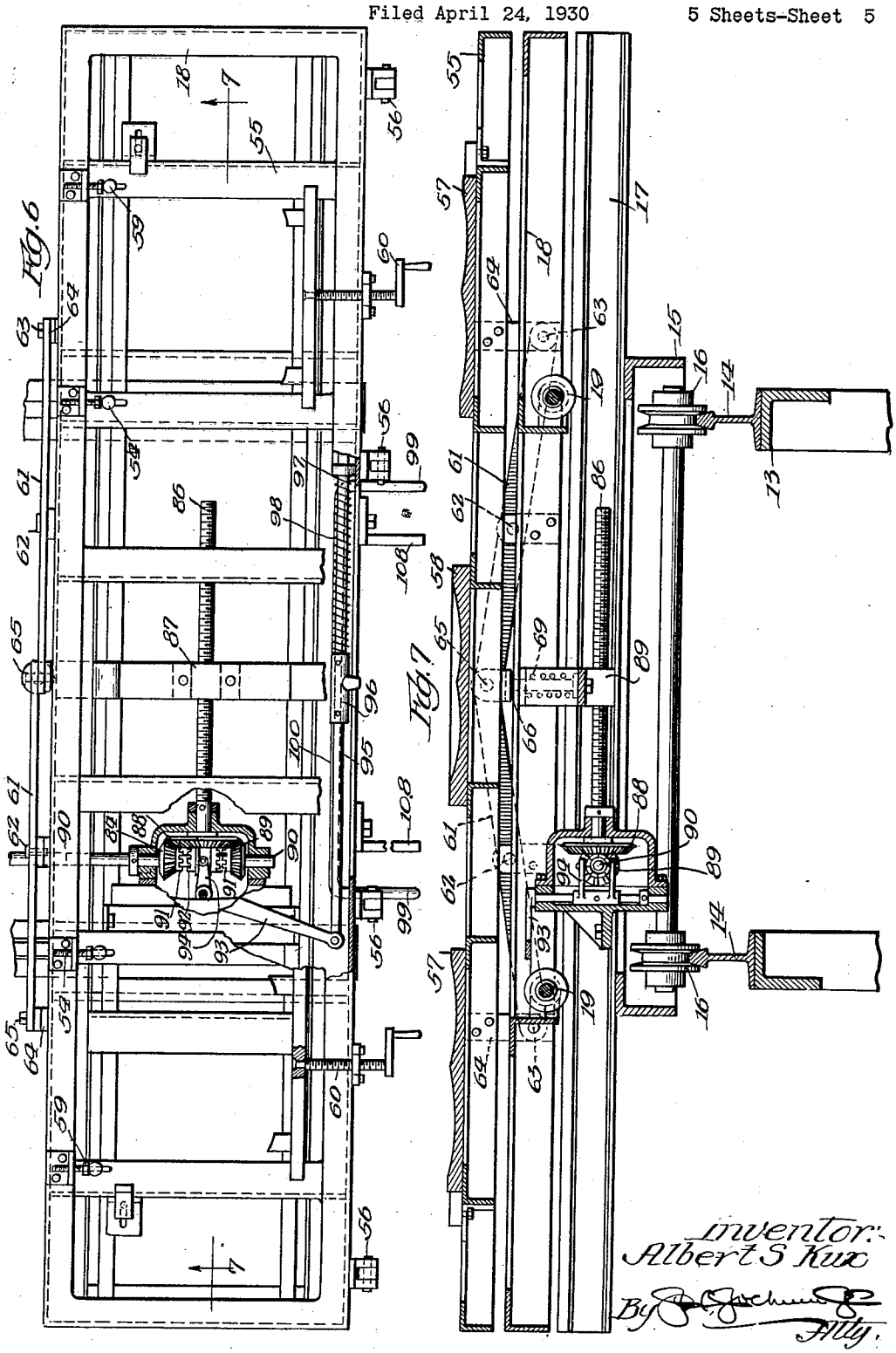

Fig. 6

Fig. 7

Inventor:
Albert S Kux
By
Atty.

Patented Jan. 19, 1932 1,841,411

UNITED STATES PATENT OFFICE

ALBERT S. KUX, OF CHICAGO, ILLINOIS

AUTOMATIC SANDING OR POLISHING MACHINE

Application filed April 24, 1930. Serial No. 446,821.

This invention relates to improvements in sanding or polishing machines particularly adapted though not necessarily limited in its use for sanding or polishing saddle seats for chairs, and one of the objects of the invention is to provide an improved machine of this character by means of the use of which a plurality of seats may be simultaneously sanded or polished, the operation being controlled by a master pattern upon a table which has two distinct feeding movements, one a comparatively rapid forward and back movement and the other a slower movement in a direction transverse to the first recited direction of movement.

A further object is to provide improved means controlled by the master pattern mechanism which tends normally to move the work and the sanding elements into operative engagement.

To the attainment of these ends and the accomplishment of other new and useful objects as will appear, the invention consists in the features of novelty in substantially the construction, combination and arrangement of the several parts, hereinafter more fully described and claimed and shown in the accompanying drawings illustrating this invention, and in which

Figure 1 is a side elevation of a machine of this character constructed in accordance with the principles of this invention.

Figure 2 is a left hand end elevation of Figure 1.

Figure 3 is a detail sectional view taken on line 3—3, Figure 1.

Figure 4 is an enlarged detail sectional view taken on line 4—4, Figure 3, with parts omitted.

Figure 5 is a detail sectional view taken on line 5—5, Figure 3, with parts omitted.

Figure 6 is a top plan view of the work supporting carriage with parts omitted, parts in section and with parts broken away.

Figure 7 is a detail sectional view taken on line 7—7, Figure 6.

Figure 8 is a detail sectional view taken on line 8—8, Figure 1.

Referring more particularly to the drawings the numeral 10 designates a supporting base provided with uprights 11 supporting a cross beam or member 12, all arranged preferably adjacent one end of the base, and at the other end of the base is arranged a supplemental supporting structure 13.

Mounted upon the support 13 are tracks 14 which extend lengthwise thereof, and reciprocable upon the tracks 14 is a carrier 15 having wheels 16 that move upon the tracks.

Mounted upon the carrier 15 are tracks 17 which extend in directions transverse to the tracks 14 and mounted upon the tracks 17 is a carriage 18 provided with wheels 19 that engage and travel upon the tracks 17.

The carriage 18 is adapted for bodily forward and backward movement with the carrier 15 and is also adapted for movement along the tracks 17 in directions transverse to the direction of travel of the carrier 15.

The carrier 15 is adapted to be reciprocated in any desired or suitable manner preferably by means of a swinging lever 20 pivotally mounted by one end as at 21, preferably mounted or supported by the cross bars or beams 12.

To the other end of the lever 20 is pivotally connected as at 22 a link 23 having a yoke 24 at the forward end thereof, and the yoke is connected by means of a pivot 25 with the carrier 15.

Pivotally mounted upon a suitable support is a shaft 26 connected to which is a crank 27 and connected to the crank is a link 28 which is also connected with a sliding block 29 movable in an opening or guideway 30 in the lever 20, so that when the shaft 26 is rotated a swinging movement will be imparted to the lever 20, which in turn will reciprocate the carrier 15 upon the tracks 14.

In order to vary the extent of movement of the carrier 15 the block 29 is adjustable toward and away from the pivot 21 of the lever 20. Any suitable means may be provided for that purpose, but a simple and efficient means embodies a screw 31 to which is connected a gear 32. Meshing with the gear 32 is a gear 33 and connected to the gear 33 is a hand wheel 34, by the operation of which latter it will be manifest that the screw 31 will be rotated and the block 29 will be

moved toward or away from the pivot 21, according to the direction of rotation of the handle 34.

The crank 27 may be rotated in any suitable manner preferably by means of a gear 35 with which another gear on a shaft 36 meshes. The shaft 36 has connected with it a clutch 37 which co-operates with another clutch member preferably connected with the pulley 38. Passing over the pulley 38 is a belt 39 which passes over a pulley 40 on a shaft 41, and on the shaft 41 is another pulley 42 which is driven by means of a belt 43 that passes over a pulley 44 on a shaft 45, the shaft 45 being rotated preferably by means of a belt 46 that passes over a pulley 47 and also over a pulley 48 on the shaft of a motor 49.

When the clutch 37 is in operative engagement with the clutch of the pulley 38 the carrier 15 will be rotated, but when the clutch is rendered inactive the carrier will also be rendered inactive.

Any suitable means may be provided for shifting the clutch 37 by hand such as a lever 50 arranged at the front of the machine and connected by means of a link 51 with a lever 52 pivotally supported intermediate its ends as at 53, the other end of the lever 52 being connected with the clutch member 37. A spring 54 tends normally to move the lever 52 in a direction to connect the shaft 36 with the power mechanism.

Connected with the carriage 18 is a work supporting table 55 secured thereto at one edge by means of suitable hinges 56, and the work supporting table 55 is of a length and width to support a plurality of pieces of work 57 and a pattern 58, the work and patterns being respectively secured to the work support between suitable clamping members 59—60.

The work supporting table 55 is yieldingly mounted with respect to the carriage 18 and for that purpose levers 61 are provided which are pivotally mounted intermediate their respective ends as at 62 upon the carriage 18. One end of one of the levers is pivotally connected as at 63 with a bracket 64 secured adjacent one end of the work supporting table 55, and the other end of the lever 61 is similarly mounted and is connected with the work suppporting table adjacent the other end thereof.

The free ends of the levers 61 are pivotally connected as at 65 to a yoke member 66, the stem of which member passes through a suitable bearing 67 on the carriage 18 and has adjustably mounted on the free end thereof a nut or collar 68. A spring 69 is interposed between the nut 68 and the bracket or bearing 67 and the spring tends normally to yieldingly support the work supporting table 55.

Mounted upon the uprights 11 are brackets 70 and pivotally supported by each of the brackets by one end as at 71 is an arm 72, and each of these arms is preferably movable between adjustable stops 73. The two arms are preferably connected by means of the bar or rod 74 so that they will move in unison and carried by the forward ends of the arms are bearings 75, in which a shaft 76 is journaled.

Telescoping with each end of the shaft 76 in the bearings 75 are sleeves 75^a to which latter are connected studs 75^b eccentrically arranged with respect thereto and upn which studs the sanding wheel or pulley 77 is mounted so that by rotatively adjusting the studs 75^b a bodily adjustment of the sanding wheel or pulley with respect to the master wheel 78 may be obtained.

Such adjustment of the pulley or wheel 77 may be obtained in any desired or suitable manner such as by means of a worm and worm gear connection 75^c—75^d and operated in any suitable manner.

Connected with the shaft 76 preferably adjacent each of the arms 72, to rotate therewith, are pulleys 77, the studs of which are eccentrically mounted so that the sanding wheel or pulleys may be adjusted with respect to the shaft 76, and connected with the shaft 76 to rotate therewith, preferably intermediate the pulleys 77 is a master wheel 78. The eccentric bearings of the pulleys 77 permit the latter to be adjusted with respect to the master wheel 78.

Passing over each of the pulleys 77 is an endless sanding or abrading element 79, each of which passes over a pulley 80 connected with the shaft 45.

Any suitable means may be provided for maintaining the endless sanding elements 79 taut, such for instance as a belt tightener embodying a pulley 81 mounted upon one end of an arm 82 that is pivotally supported as at 83 upon a fulcrum 84. On the free end of the arm 82 is adjustably mounted a weight 85, and the weight is such that it will hold the pulley 81 against the sanding element 79 and maintain the latter taut.

The arms 72 with the supporting pulleys and the master wheel 78 are adapted to be raised and lowered about the pivot 71 by adjustment of the stops 73, and in the present form of the invention when so adjusted the arms 72 will be held against further adjustment. The arms 72 are so adjusted that the master wheel 78 will contact with the surface of the pattern 58 on the work supporting table and when so positioned the pulleys 77 will cause the portion of the endless flexible abrading element 79 which passes thereover to be held in contact with the surface of the work 57.

The sanding elements 79 are continuously operated when the machine is in operation as the shaft 45 will be rotated from the motor 49, and reciprocation is imparted to the carrier 15, which latter carries with it the work

supporting table 55 to cause the work 57 to be moved back and forth under the respective pulleys 77 and the pattern 58 to be moved back and forth under the master wheel or pulley 78 and by reason of the crank movement 27 and link 28 together with the lever 20 and the connecting link 23 the carrier 15 will be given a forward and backward movement, the extent of which may be varied by adjusting the block 29 on the lever 20, and as the carrier 15 is reciprocated with respect to the pulleys 77 and the master wheel 78, it will be manifest that during the reciprocating movement of the carrier the sanding element will be moving over the surface of the work.

This reciprocation of the carrier will continue until the clutch 37 is disengaged to arrest the swinging movement of the lever 20. The clutch 37 may be shifted manually by operating the lever 50 and is also adapted to be shifted automatically in a manner to be later described.

In order to provide a traveling movement of the work supporting table 55 upon and with respect to the carriage 18, there is provided a threaded shaft 86 (see particularly Figures 6 and 7) which passes through a threaded bearing 87 on the carriage 18.

Connected to the shaft 86 is a gear wheel 88 which meshes with two gear wheels 89 loosely mounted upon a shaft 90, and the shaft 90 receives its motion preferably from the shaft 36 through the medium of a belt 90^a passing over a pulley on the shaft 36 and also over a pulley 90^b on the shaft 90. Each of the gears 89 is provided with a clutch face 91, and a clutch element 92 is arranged intermediate the gears 89 on the shaft 90 and is keyed thereto. This clutch 92 is adapted to be shifted so as to connect either of the gears 89 to the shaft 19, according to the direction of shifting movement so as to change the direction of rotation of the threaded shaft 86.

The clutch member 92 is adapted to be shifted by means of a lever 93 through the medium of a yoke 94. The end of the lever 93 is connected to a rod 95 having a collar 96 secured thereto and the rod 95 passes through a bearing 97, a spring 98 being interposed between the collar 96 and the bearing 97 which tends to move the clutch member 92 to a position intermediate the clutch faces 91 of the gears 89.

When the lever 50 is in a position to cause the clutch 37 to be active, the lever will stand between arms 99 of a rod 100 which is connected with the rod 95 (see particularly Figures 2 and 6) by means of an extension 101 so that when the work supporting table 55 reaches a predetermined distance in either direction in its travel transverse to the direction of reciprocation of the carrier one of the arms or projections 99 will engage the lever 50 and the lever will cause the rod 95 to rock the lever 93 and shift the clutch member 92. The lever 50 is adapted for a limited degree of lateral movement so as to prevent injury to the parts and to form a cushion between the lever and the work supporting table. To that end the lever is preferably provided with a joint formed by means of a rod 102 connected with the rod 51, through the medium of an arm 103 (see particularly Figures 2 and 3). The lever is pivotally supported as at 104 upon the arm 103 and is provided with a pin 105 extending laterally beyond the sides thereof. This pin passes through a suitable bearing 106 and also the end of the arm 103, and coiled springs 107 are arranged on each side of the lever so as to permit of a limited degree of lateral movement of the lever without affecting the pivotal movement of the lever 50 in a direction to rock the shaft 102.

It will therefore be manifest that as the work supporting carriage approaches the limit of its travel in either direction the lever 93 will be shifted to correspondingly shift the clutch member 92 and thereby reverse the rotation of the shaft 86. The carrier 15 will be continuously reciprocated during the operation of the machine, as before said, until the clutch 37 is released. It has already been shown how the clutch 37 can be manually released by the lever 50.

In order to automatically shift the lever 50 at the time when the work supporting carrier 55 has about reached the limit of its movement transverse to the direction of reciprocation of the carrier 15, arms or projections 108 are adjustably secured or mounted upon the carriage 18, being adjustably held in position by means of a slot 109 and bolt connection 110. By loosening the bolts and adjusting the projections 108, it will be manifest that they may be set in any desired position.

As soon as the work supporting table 55 reaches a position that one of these arms or projections 108 is in alinement with the lever 50 upon the backward movement of the work supporting table, it will be manifest that upon the forward movement of the work supporting table the respective arm or projection 108 (see particularly Figure 4) will engage the lever 50 and thereby shift the same to release the clutch 37.

It will therefore be manifest that with this improved construction there will be a bodily reciprocation of the carrier and the work supporting table forwardly and backwardly, which reciprocation may be controlled at will. Furthermore, there will be a continuous feeding movement of the work supporting table with respect to the carriage in a direction transverse to the bodily reciprocating movement of the carriage, and the work supporting table, until the work supporting table reaches the limit of its transverse movement, at which time the direction

of rotation of the threaded shaft 86 is reversed and the work supporting table will be given a continuous movement in the opposite direction.

During the movement of the work supporting carriage in either of its directions the master wheel 78 will be moved over and in contact with the pattern 58, thereby controlling and guiding the pulleys 77 and the sanding elements 79 passing thereover, which operate upon the work 57.

The work supporting table is yieldingly held in engagement with the sanding elements as is also the pattern 58 with the master wheel 78 and will insure accurate work upon the pieces of work 57.

The eccentric mounting of the pulleys or wheels 77 permits of a fine adjustment of the pulleys with respect to the work.

This construction also permits of the operation upon a plurality of pieces of work at the same time by the use of a single pattern, rendering it possible for a single operator to operate and attend to several machines at the same time.

While the preferred form of the invention has been herein shown and described, it is to be understood that various changes may be made in the details of construction and in the combination and arrangement of the several parts, within the scope of the claims, without departing from the spirit of this invention.

What is claimed as new is:—

1. A sanding machine embodying a work supporting table, means securing a plurality of pieces of work thereto, one of said pieces constituting a master pattern, a master roller co-operating with and movable over said pattern, means for imparting two different directions of movement to said table one transverse to the other, pulleys rotatable with said master roller and individual to the other pieces of work, endless sanding elements individual to the said pulleys, and means for imparting a traveling movement to said sanding elements with relation to their respective pieces of work.

2. A sanding machine embodying a work supporting table, means securing a plurality of pieces of work thereto, means for imparting a comparatively rapid forward and backward movement to the table, means for imparting a slower feeding movement to the table in directions transverse to the direction of the first recited feeding movement, a master roller adapted to engage and move across one of said pieces of work, the latter constituting a pattern, traveling sanding elements movable with said roller and individual to the remaining pieces of work, and means for actuating the sanding elements with respect to the individual pieces of work.

3. A sanding machine embodying a work supporting table, means securing a plurality of pieces of work thereto, means for imparting a comparatively rapid forward and backward movement to the table, means for imparting a slower feeding movement to the table in directions transverse to the direction of the first recited feeding movement, a master roller adapted to engage and move across one of said pieces of work, the latter constituting a pattern, traveling sanding elements movable with said roller and individual to the remaining pieces of work, means for actuating the sanding elements with respect to the individual pieces of work, and means individual to the said feeding means and responsive in their operation to the operation of the said table for controlling the said feeding means.

4. In a sanding machine, a carriage, a work support mounted thereupon, a sanding element disposed above the work support, a master roller also disposed above the work support, means tending normally to move the work support towards the sanding element and said roller, a pattern on the support and with which the said roller co-operates, means for imparting a forward and backward movement to the carriage, means for imparting a transverse movement to the carriage, means for actuating the sanding element, and means whereby the pressure of the master roller upon the pattern will control the degree of pressure of the sanding element upon the work.

5. In a sanding machine, a carrier, means mounting the carrier for a forward and backward reciprocating movement, means for varying the extent of such movement, a work supporting carriage mounted upon the said carrier for bodily movement therewith and for movement with respect thereto in directions transverse to the reciprocating movement, means for automatically changing the direction of movement of the said carriage with respect to said carrier, means securing a plurality of pieces of work upon the carriage, sanding elements above the work and individual thereto, a pattern, and a master wheel cooperating with the pattern and controlling the bodily movement of the sanding elements.

6. In a sanding machine, a carrier, means mounting the carrier for a forward and backward reciprocating movement, means for varying the extent of such movement, a work supporting carriage mounted upon the said carrier for bodily movement therewith and for movement with respect thereto in directions transverse to the reciprocating movement, means for automatically changing the direction of movement of the said carriage with respect to said carrier, means securing a plurality of pieces of work upon the carriage, sanding elements above the work and individual thereto, a pattern, a master wheel co-operating with the pattern and controlling the bodily movement of the

sanding elements, and means tending normally to move the sanding elements and the work one bodily toward the other.

7. In a sanding machine, a carrier, means mounting the carrier for a forward and backward reciprocating movement, means for varying the extent of such movement, a work supporting carriage mounted upon the said carrier for bodily movement therewith and for movement with respect thereto in directions transverse to the reciprocating movement, means for automatically changing the direction of movement of the said carriage with respect to said carrier, means securing a plurality of pieces of work upon the carriage, sanding elements above the work and individual thereto, a pattern, a master wheel co-operating with the pattern and controlling the bodily movement of the sanding elements, means mounting the work carriage upon said carrier for bodily movement towards the sanding elements, and means tending normally to hold the work and sanding elements yieldingly in engagement.

8. In a sanding machine, a reciprocable carrier, means for reciprocating the carrier, a work supporting table mounted upon the carrier for bodily movement therewith and for movement with respect thereto in directions transverse to the direction of reciprocating movements, means for imparting the said transverse movement to the work supporting table, means for automatically reversing the direction of the last said movement, sanding elements above and independent of said table, means for actuating the sanding elements, means yieldingly holding the work and sanding elements in engagement, means for holding a pattern upon said table, and a master wheel movable over said pattern for controlling the sanding elements.

9. In a sanding machine, a reciprocable carrier, a work carriage bodily movable with and with respect to the carrier, means for imparting to the carriage movements transverse to the direction of reciprocating movement of the carrier, means for securing to the carriage the work and a pattern, sanding elements individual to the work, a master roller co-operating with the pattern for controlling the position of the sanding elements with respect to the work, and means for actuating the sanding elements.

10. In a sanding machine, a reciprocable carrier, a work carriage body movable with and with respect to the carrier, means for imparting to the carriage movements transverse to the direction of reciprocating movement of the carrier, means for securing to the carriage the work and a pattern, sanding elements individual to the work, a master roller co-operating with the pattern for controlling the position of the sanding elements with respect to the work, means for actuating the sanding elements, and means controlled by the master roller and pattern for holding the sanding elements and work in engagement.

11. In a sanding machine a reciprocable carrier, means for reciprocating the carrier, a work supporting carriage movable with and with respect to the carrier, means for imparting a movement to the carriage transverse to the direction of reciprocation of the latter and at a slower rate of speed than the speed of said reciprocation, means for automatically controlling the movement of the carrier and of the carriage with respect to the carrier, sanding elements above the carriage, means for actuating the sanding elements, and a master roller co-operating with a master form for controlling the position of the work and said sanding elements one with respect to the other.

12. In a sand machine a reciprocable carrier, means for reciprocating the carrier, a work supporting carriage movable with and with respect to the carrier, means for imparting a movement to the carriage transverse to the direction of reciprocation of the latter and a slower rate of speed than the speed of said reciprocation, means for automatically controlling the movement of the carrier and of the carriage with respect to the carrier, sanding elements above the carriage, means for actuating the sanding elements, a master roller co-operating with a master form for controlling the position of the work and said sanding elements one with respect to the other, a work holder upon the carriage, and means tending normally to move the work holder with respect to the carriage and into engagement with the respective sanding elements.

13. In a sanding machine a reciprocable carrier, means for reciprocating the carrier, a work supporting carriage movable with and with respect to the carrier, means for imparting a movement to the carriage transverse to the direction of reciprocation of the latter and at a slower rate of speed than the speed of said reciprocation, means for automatically controlling the movement of the carrier and of the carriage with respect to the carrier, sanding elements above the carriage, means for actuating the sanding elements, a master roller co-operating with a master form for controlling the position of the work and said sanding elements one with respect to the other, a work holder upon the carriage, and means controlled by the master roller and operating to move the work and sanding elements one with respect to the other and into engagement with each other.

14. In a sanding machine a reciprocable carrier, means for reciprocating the carrier, a work supporting carriage movable with and with respect to the carrier, means for imparting a movement to the carriage transverse to the direction of reciprocation of the

latter and a slower rate of speed than the speed of said reciprocation, means for automatically controlling the movement of the carrier and of the carriage with respect to the carrier, sanding elements above the carriage, means for actuating the sanding elements, a master roller co-operating with a master form for controlling the position of the work and said sanding elements one with respect to the other, and means individual to the carrier reciprocating means and the means for moving the carriage with respect to the carrier for varying the extent of such movement at will.

15. A sanding machine embodying a pivotally mounted work supporting table, means for securing work thereto, a master pattern also secured to the table, a master wheel co-operating with said master pattern, means for imparting movements to said table in directions intersecting each other, a sanding element in substantially axial alinement with the said master wheel, and means for imparting a traveling movement to said sanding element.

16. A sanding machine embodying a pivotally mounted work supporting table, means for securing work thereto, a master pattern also secured to the table, a master wheel co-operating with said master pattern, means for imparting movements to said table in directions intersecting each other, a sanding element in substantially axial alinement with the said master wheel, means for imparting a traveling movement to said sanding element, and means mounting said sanding element for adjustment in directions transverse to the axis of and with respect to said master wheel.

17. A sanding machine embodying a work supporting table, means for securing the work to the table, means for securing a master pattern to said table, a master roller co-operating with and movable over said master pattern, means for imparting two different directions of movement to said table one transverse to the other, a support for abrading material rotatable with said master roller, abrading material upon said support and operating upon the work, and means for imparting a traveling movement to said support and abrading material with relation to the work.

In testimony whereof I have signed my name to this specification, on this 7th day of April, A. D. 1930.

ALBERT S. KUX.