PCT WORLD INTELLECTUAL PROPERTY ORGANIZATION
International Bureau

INTERNATIONAL APPLICATION PUBLISHED UNDER THE PATENT COOPERATION TREATY (PCT)

(51) International Patent Classification 6 : A62D 3/00 — A1

(11) International Publication Number: **WO 95/33523**

(43) International Publication Date: 14 December 1995 (14.12.95)

(21) International Application Number: PCT/GB95/01186

(22) International Filing Date: 24 May 1995 (24.05.95)

(30) Priority Data:
9411212.5 4 June 1994 (04.06.94) GB

(71) Applicant *(for all designated States except US)*: UNITED KINGDOM ATOMIC ENERGY AUTHORITY [GB/GB]; Harwell, Didcot, Oxfordshire OX11 0RA (GB).

(72) Inventors; and
(75) Inventors/Applicants *(for US only)*: CONLIN, Iain [GB/GB]; 520 Bellshill Road, Motherwell ML1 3TY (GB). WARREN, Nigel, Desmond, Evan [GB/GB]; Flat 6, Oldfield House, Thurso, Caithness KW14 8RE (GB). STEELE, David, Frame [GB/GB]; Burnlea Cottage, Dunnet, Caithness KW14 8QD (GB).

(74) Agent: LOFTING, Marcus, John; United Kingdom Atomic Energy Authority, Patents Dept., 329 Harwell Didcot, Oxfordshire OX11 0RA (GB).

(81) Designated States: AM, AT, AU, BB, BG, BR, BY, CA, CH, CN, CZ, DE, DK, EE, ES, FI, GB, GE, HU, IS, JP, KE, KG, KP, KR, KZ, LK, LR, LT, LU, LV, MD, MG, MN, MW, MX, NO, NZ, PL, PT, RO, RU, SD, SE, SG, SI, SK, TJ, TT, UA, US, UZ, VN, European patent (AT, BE, CH, DE, DK, ES, FR, GB, GR, IE, IT, LU, MC, NL, PT, SE), OAPI patent (BF, BJ, CF, CG, CI, CM, GA, GN, ML, MR, NE, SN, TD, TG), ARIPO patent (KE, MW, SD, SZ, UG).

Published
With international search report.

(54) Title: ELECTROCHEMICAL OXIDATION OF MATTER

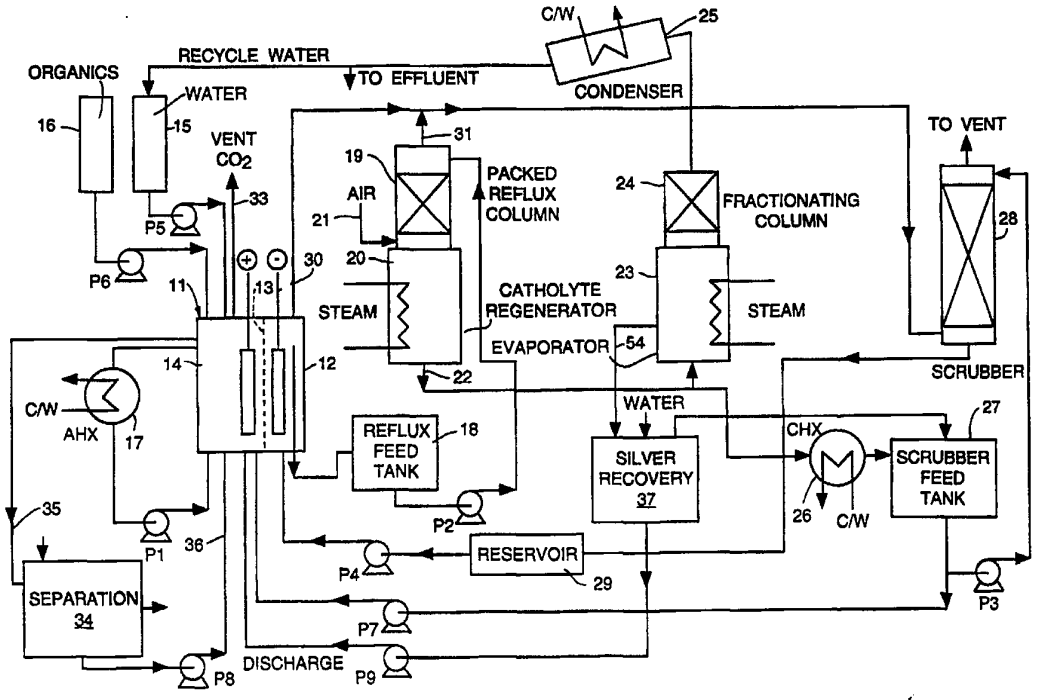

(57) Abstract

Decomposition of waste and particularly organic waste matter is carried out in an electrochemical cell (11) in which the electrolyte comprises nitric acid containing silver ions as an electrochemically regenerable primary oxidising species. A separation plant (34) for continuously or periodically withdrawing anolyte is operated to remove or reduce contamination of the anolyte with anions of or containing phosphorus, sulphur, nitrogen or halogens.

FOR THE PURPOSES OF INFORMATION ONLY

Codes used to identify States party to the PCT on the front pages of pamphlets publishing international applications under the PCT.

AT	Austria	**GB**	United Kingdom	**MR**	Mauritania
AU	Australia	**GE**	Georgia	**MW**	Malawi
BB	Barbados	**GN**	Guinea	**NE**	Niger
BE	Belgium	**GR**	Greece	**NL**	Netherlands
BF	Burkina Faso	**HU**	Hungary	**NO**	Norway
BG	Bulgaria	**IE**	Ireland	**NZ**	New Zealand
BJ	Benin	**IT**	Italy	**PL**	Poland
BR	Brazil	**JP**	Japan	**PT**	Portugal
BY	Belarus	**KE**	Kenya	**RO**	Romania
CA	Canada	**KG**	Kyrgystan	**RU**	Russian Federation
CF	Central African Republic	**KP**	Democratic People's Republic of Korea	**SD**	Sudan
CG	Congo			**SE**	Sweden
CH	Switzerland	**KR**	Republic of Korea	**SI**	Slovenia
CI	Côte d'Ivoire	**KZ**	Kazakhstan	**SK**	Slovakia
CM	Cameroon	**LI**	Liechtenstein	**SN**	Senegal
CN	China	**LK**	Sri Lanka	**TD**	Chad
CS	Czechoslovakia	**LU**	Luxembourg	**TG**	Togo
CZ	Czech Republic	**LV**	Latvia	**TJ**	Tajikistan
DE	Germany	**MC**	Monaco	**TT**	Trinidad and Tobago
DK	Denmark	**MD**	Republic of Moldova	**UA**	Ukraine
ES	Spain	**MG**	Madagascar	**US**	United States of America
FI	Finland	**ML**	Mali	**UZ**	Uzbekistan
FR	France	**MN**	Mongolia	**VN**	Viet Nam
GA	Gabon				

Electrochemical Oxidation of Matter

The invention relates to a method and apparatus for the electrochemical oxidation of matter and has particular application in the decomposition of waste material comprising organic compounds which contain sulphur, nitrogen and/or halogen and which may or may not be contaminated with inorganic or radioactive material.

Patent specification EP 0 297 738 describes a method and apparatus for electrochemical treatment of organic waste matter using an aqueous electrolyte comprising nitric acid and containing silver ions as an electrochemically regenerable primary oxidising species. Operated at a temperature between 50°C and 90°C, the cell is particularly effective in decomposing organic waste matter. This occurs to a significant extent via secondary oxidising species produced by reaction in this temperature range of Ag(II) ions with water, a reaction which would otherwise have been regarded as parasitic because it would have been expected to reduce the efficiency of the cell for oxidising the organic matter.

Nitric acid electrolyte is advantageous for a number of applications such as when radioactive materials are being treated to destroy their organic content because many waste treatment systems already in place for dealing with radioactive materials are configured to handle aqueous waste containing nitric acid. The volatility of the acid is advantageous in such applications because it can be distilled and recovered, thereby reducing waste volumes for disposal.

Examples of use of the apparatus and method for decomposition of organic matter which is to be disposed of are described in EP 0 297 738, the disclosure of which

is imported by reference herein. Forms of organic waste which have assumed importance in recent years are explosive material and chemical weapons required to be destroyed, for example, under International Treaty arrangements. The method and apparatus described in EP 0 297 738 provides a safe and effective route for disposal of such material. However, the presence of certain elements in the waste matter, particularly within complex organic components can present a problem requiring special treatment if continued efficient operation of the cell is to be maintained. In this context, the problem of phosphorus is mentioned briefly in EP 0 297 738.

We have also found that such problems arise as a consequence of the presence in the waste matter of sulphur, nitrogen and halogens. These problems and that of recovery of silver are addressed in accordance with the present invention by a modification of the method and apparatus described in EP 0 297 738.

The present invention provides, in one of its aspects, a method of treating waste matter comprising organic matter in which method an aqueous electrolyte comprising nitric acid and containing ions of silver as an electrochemically regenerable primary oxidising species is subjected to an electric potential within an electrochemical cell and the waste matter is added to the electrolyte either continuously or periodically thereby to be decomposed by an oxidation process in which the primary oxidising species is reduced and regenerated by the electric potential, characterised in that, for waste matter containing any one or more of the elements sulphur, nitrogen, chlorine, bromine or iodine such that inorganic salts or ions thereof containing these elements are formed, electrolyte is withdrawn continuously or periodically from the cell, treated to remove the said

element or elements by precipitation, crystallisation or distillation and electrolyte returned to the cell.

Although the use of cobalt in substitution for silver in such a cell is possible in principle, cobalt by itself in the electrolyte has poor electrochemical efficiency due to its slow kinetics at the electrode and in solution. However, inclusion of cobalt ions in the electrolyte in addition to silver ions can be advantageous.

Preferably the method is performed at an electrolyte temperature above 50°C to produce secondary oxidising species from the interaction of the primary oxidising species and the aqueous electrolyte, whereby decomposition of the added waste matter by Ag (II) is enhanced by the secondary oxidising species.

It is preferable that the nitric acid has a concentration in the range 4M to 22M, but the electrolyte may comprise a mixture comprising nitric acid and sulphuric acid or a mixture comprising nitric acid and phosphoric acid.

Where the waste matter contains sulphur, the electrolyte withdrawn from the cell will contain silver, nitric acid and sulphuric acid. Separation for removal of the sulphate ions is conveniently effected by adding chloride ions, e.g. as hydrochloric acid, to precipitate silver chloride which, after separation, is converted to silver metal or silver oxide and re-dissolved in nitric acid as reconstituted electrolyte for return to the cell. The supernatant consisting of silver-free nitric and sulphuric acids is disposed of as waste either in total or after some or all of the nitric acid has been recovered by distillation. Such recovered nitric acid

can be returned to the cell.

Alternatively, the electrolyte withdrawn from the cell is cooled to cause crystallisation of silver sulphate and, after separation, the sulphate-reduced electrolyte returned to the cell. The silver sulphate is converted to silver oxide by treatment with caustic alkali, to silver metal by treatment with alkali/reducing agent or to silver carbonate by treatment with Na_2CO_3 solution and returned to the cell.

In a further alternative according to the invention, sulphate ions are removed from the withdrawn electrolyte by direct precipitation as barium sulphate. After separation, the supernatant comprising substantially sulphate-free electrolyte is returned to the cell.

Where the waste matter contains nitrogen, some build up of nitrate in the electrolyte is acceptable or even beneficial, but excess nitrate is conveniently removed from the withdrawn electrolyte by distillation.

Where the waste matter contains chlorine or other halogens there will be direct precipitation of silver halide in the electrolyte which can be removed from the withdrawn electrolyte and treated to recover and return silver as silver metal or silver oxide.

The invention provides, in another of its aspects, apparatus for use in the treatment of waste matter comprising or including organic matter containing any one or more of the elements phosphorus, sulphur, nitrogen, chlorine, bromine, iodine, which apparatus comprises an electrochemical cell having a cathode, an anode, a permeable separator between the anode and cathode forming an anode region and a cathode region within the cell, an

electrolyte comprising nitric acid and containing ions of silver, means for withdrawing catholyte from the cathode region and means for feeding fresh or regenerated catholyte to the cathode region, means for feeding the waste matter into the anode region, characterised in that a separate processing plant is connected to withdraw anolyte continuously or periodically from the anode region of the cell, which plant comprises means for removing said element or elements by precipitation, crystallisation or distillation and for returning reconstituted anolyte to the anode region of the cell.

Specific constructions of apparatus and methods embodying the invention will now be described by way of example and with reference to the drawings filed herewith, in which:

Figure 1 is a schematic representation of apparatus for use in the decomposition of waste matter,

Figure 2 is a schematic representation in greater detail of part of the apparatus shown in Figure 1, and

Figure 3 is a schematic representation in greater detail of another part of the apparatus shown in Figure 1.

Figure 1 shows apparatus corresponding to that shown in Figure 2 of EP 0 297 738, but incorporating modifications embodying the present invention. Figures 2 and 3 illustrate the modifications in greater detail.

Referring to Figure 1, those parts of the apparatus which correspond with that shown in EP 0 297 738 will first be described briefly. An electrochemical cell 11 has a cathode compartment 12 separated by a permeable

separator 13 from an anode compartment 14. A water supply 15 is connected via pump P5 to the anode compartment 14. Organic waste is also added to the anode compartment 14 and is illustrated by a source 16 connected via pump P6.

Anolyte temperature control is effected by a cooler 17 through which anolyte is circulated by pump P1.

For catholyte regeneration, catholyte is continuously withdrawn via a reflux feed tank 18 and pump P2 to be fed to the top of a reflux packed column 19 above a boiler 20 which contains nitric acid at the catholyte concentration and which refluxes into the packed column 19. As the catholyte containing nitric and nitrous acids descends the packed column 19 it is heated to the boiling point of refluxing nitric acid (typically 107-112°C) and the nitrous acid decomposes to HNO_3, NO_2, NO and water. The NO is oxidised to NO_2 by air or oxygen injected via duct 21. The NO_2 is absorbed into the liquor descending the packed column 19 so that the liquor reaching the boiler 20 is essentially pure nitric acid which is withdrawn via duct 22 at the same rate as catholyte is fed to the packed column 19.

As there is a transfer of water from anolyte to catholyte (the main current carrier being H_3O^+), we have found it necessary to provide for further concentration by evaporation of the product withdrawn via duct 22 from the boiler 20. For this purpose, a steam heated evaporator 23 is provided with associated fractionating column 24. The distillate from the evaporator 23 is condensed in condenser 25 and can be recycled to the water supply 15, although it may contain some nitric acid so that it may be preferred to treat this distillate as effluent.

The concentrated regenerated catholyte is passed via cooler 26 to a scrubber feed tank 27 from which a proportion may be returned via pump P7 to the anode compartment 14 to make up nitric acid concentration in the anolyte as described further hereinafter. The remainder of the regenerated catholyte is pumped from the scrubber feed tank 27 by pump P3 to a scrubber 28 from which it is returned via a reservoir 29 and pump P4 to the cathode compartment 12.

Ducts 30 and 31 conduct any nitrogen oxides evolved from the cathode compartment 12 or the packed column 19 to the scrubber 28 where they are absorbed in the regenerated catholyte. A vent 32 is provided for escape of carbon dioxide produced in the anode compartment.

The modifications embodying the present invention comprise a separation plant 34 connected via withdrawal duct 35 and return pump P8 and duct 36 to the anode compartment 14, and a silver recovery plant 37 with duct connections as shown to the bottom of the evaporator 23, to the scrubber feed tank 27 and, via pump P9 to the anode compartment 14. The separation plant 34 is shown in greater detail in Figure 2 and the silver recovery plant 37 is shown in greater detail in Figure 3.

In use, the electrochemical cell 11 is charged with an anolyte of nitric acid (typically 4-12M) containing silver nitrate (at least 0.05M), and a catholyte of nitric acid (typically 6-16M). The waste matter to be decomposed is added to the anode compartment 14. If it comprises solid matter such as tissues, rubber or plastics it is shredded beforehand. Electric potential is applied to the electrodes and the process controlled with the objective of decomposing the organic waste matter by oxidation to primarily water and carbon

dioxide. In the process, water is transferred from anolyte to catholyte, as mentioned above, and the preferred reaction at a titanium, stainless steel or platinum cathode is reduction of nitric acid to nitrous acid. There is also transfer of silver ions from anolyte to catholyte and elements phosphorus, sulphur, nitrogen and halides found in organic materials will contaminate the anolyte.

It is the purpose of the separation plant 34 to deal with this contamination of the anolyte and the purpose of the silver recovery plant 37 to recover, and return to the anolyte, silver which has transferred to the catholyte.

The precise details of the process steps and their sequence for the separation plant 34 is different in dependence upon which of the above mentioned elements is contaminating the anolyte.

A composite arrangement of components is shown in Figure 2 with valving for enabling the inclusion or omission of certain process steps. It can thus be convenient to employ the same plant for whichever of the processing steps are required. However, it will be appreciated that it may be preferable to have separate dedicated plant for each process sequence. In this case, the valving shown in Figure 2 would not be required but the alternatives, implicit in the valving arrangements, provided by separate dedicated combinations.

Referring to Figure 2, with valves V1 and V2 in the position shown, anolyte withdrawn from the anode compartment 14 via duct 35 is fed direct to a first treatment vessel 41 which is provided with a cooler 42. Output from this treatment vessel 41 passes to a first

cyclone 43 for separating liquid from precipitated or crystallized solid material. With valve V3 in the position shown, the separated liquid passes via a mixing vessel 44 to the output of the plant 34 connected to pump P8. With valve V4 in the position shown, solids output from the first cyclone 43 passes to a second treatment vessel 45. Output from second treatment vessel 45 containing solids and liquid passes to second cyclone 46, the separated liquid from which is discharged via duct 47 and the separated solids passed to the mixing vessel 44 for dissolution and return to the anode compartment 14 via pump P8.

The alternative (dotted) position of valves V1 and V2 provides for withdrawn anolyte to be passed to a third cyclone 48 in which solids in the anolyte are removed and returned to the anode compartment 14 via mixing vessel 44 and pump P8. The separated liquid is passed to a distillation column 49, from which distillate returns to the anode compartment via mixing vessel 44 and pump P8. Residue from the distillation column 49 is passed to first treatment vessel 41.

The valves V3 and V4 provide several alternatives in which, as required:

1) The liquid fraction from first cyclone 43 can be passed direct to discharge rather than returned to mixing vessel 44.

2) The solids fraction from the first cyclone 43 can be returned directly to the mixing vessel 44 or alternatively directed straight to discharge.

The operation of the separation plant 34 for dealing

with contamination of anolyte with respectively sulphate, phosphate, nitrate and chloride will now be described for each ion.

Sulphate

The valves V1, V2 and V4 are in the position shown by continuous lines. The valve V3 is in the position shown dotted. Anolyte withdrawn via duct 35 will contain silver, nitric acid and sulphuric acid. Controlled quantities of hydrochloric acid or any suitable soluble halide salt (chloride preferred in view of the greater expense of bromide or iodide salts) are supplied to the first treatment vessel 41 via duct 51 so that silver chloride is precipitated. The precipitate is separated in cyclone 43 and the supernatant, consisting of silver-free nitric and sulphuric acids passes via valve V3 to discharge. This discharge can be disposed of as waste or may be treated to recover nitric acid by distillation, in which case the nitric acid can be returned to the anolyte.

The silver chloride precipitate passes into second treatment vessel 45 for conversion to silver metal or silver oxide for recycle to the anolyte. The conversion can be effected by any one of a number of known methods, reagent being introduced via duct 52. For example, treatment of silver chloride with a large excess of strong sodium or potassium hydroxide forms Ag_2O or treatment with sodium or potassium hydroxide together with a reducing agent such as hydrogen peroxide or formaldehyde will form a mixture of silver and silver oxide (Ag_2O). Alternatively, silver can be recovered from the silver chloride by an electrolytic process, for example by dissolution in ammonia solution and cathodic deposition.

The product metal or oxide/metal mixture is separated from the residue of liquid reagents by the second cyclone 46, from which the separated liquid is passed via duct 47 to discharge. The metal or oxide/metal mixture can be dissolved directly in the anolyte. However, it is convenient to pass it via mixing vessel 44 for dissolution in make up nitric acid introduced via duct 53.

Silver sulphate is soluble in nitric acid under the normal anolyte operating conditions up to about 100 g/l sulphate at 80°C. The solubility is less at ambient temperature or below. An alternative to precipitation of silver chloride as described above is therefore to cool the first treatment vessel 41 via cooler 42 to cause crystallization of Ag_2SO_4. In this case, the valves V3 and V4 are both in the position shown by continuous lines. The liquid anolyte separated in first cyclone 43 will have a reduced sulphate content and is returned via mixing vessel 44 to the anode compartment. The separated silver sulphate crystals pass to second treatment vessel 45 where they are treated with a slight excess of sodium or potassium hydroxide solution, preferably concentrated (8-12M or higher) to reduce waste volumes, at a temperature up to about 90°C. The Ag_2SO_4 is converted to Ag_2O which is separated in the second cyclone 46 and returned to the anolyte via mixing vessel 44. The supernatant, which consists of a solution containing sodium sulphate and a little sodium or potassium hydroxide is disposed of as waste via duct 47.

A variation of this approach is to operate the anolyte at the saturation level, with Ag_2SO_4 present in the anolyte. In this case, there would be no need to apply cooling to first treatment vessel 41. Any crystals of Ag_2SO_4 are automatically separated in the first cyclone

43 and passed for treatment/further processing as described above. This approach has the advantage of controlling the level of sulphate in the anolyte automatically.

A further variation, requiring the valves V1 and V2 in Figure 2 to be positioned as shown dotted, is useful if solids arising from the waste materials being decomposed are present in the anolyte circuit. In this variation, the anolyte is operated so as to be below the saturation level for silver sulphate and is subjected to a separation step in third cyclone 48 to remove the solids before the silver sulphate crystallization step is undertaken. Advantageously, the concentration of silver and sulphate ions in the anolyte is increased by distilling off some nitric acid and water in distillation column 49. The distillate is recycled via mixing vessel 44 and the concentrate is passed to the first treatment vessel 41 where it is subjected to cooling to precipitate the sulphate, as described above. This variation achieves a greater sulphate removal per pass than the method described above, but at the expense of greater energy requirements.

Barium sulphate, $BaSO_4$, is extremely insoluble in nitric acid. A further alternative approach to removal of sulphate is thus afforded by direct precipitation of barium sulphate. For this, valves V1, V2 and V3 in Figure 2 are in the position shown by continuous lines and valve V4 is in the dotted position which connects the solid output from first cyclone 43 to discharge. A soluble salt of barium, which has an anion which does not cause any problems by virtue of its addition to the anolyte, such as barium hydroxide $Ba(OH)_2$ or barium nitrate $Ba(NO_3)_2$ is added at 51 to the first treatment vessel 41. This will result in precipitation of sulphate

as $BaSO_4$. Sulphate-free liquid from first cyclone 43 is returned via mixing vessel 44 to the anode compartment. The barium sulphate is passed direct to discharge.

If solids are present in the circulating anolyte, these are desirably removed by a separation step (as by third cyclone 48, but without a subsequent distillation step) prior to the barium sulphate precipitation step.

Direct precipitation as barium sulphate in this way is the simplest approach to sulphate removal, but does generate a relatively large volume of solid (but inert) waste for disposal.

Calcium sulphate, $CaSO_4$ is a possible alternative in soluble sulphate for precipitation. However, it is slightly soluble in the nitric acid electrolyte and some Ca^{2+} would be left in solution in the returning anolyte. These ions would ultimately accumulate in the catholyte system, from which they would have to be removed for example by crystallization as calcium nitrate.

Phosphate

All metal phosphates, including silver phosphate (Ag_3PO_4) are too soluble in nitric acid to permit direct precipitation from the anolyte. The approach to phosphate removal is therefore based on operating with phosphate in the anolyte but at a concentration which is such as will not materially affect the operation of the process, such as by unacceptably increasing the corrosivity of the anolyte or reducing process efficiency.

The separation plant of Figure 2 is operated with the valves V1 and V2 in the position shown by continuous lines. Valve V3 is in the dotted position for connection

direct to discharge and valve V4 is in the dotted position for return of the solids fraction from first cyclone 43 to the anode compartment via mixing vessel 44. Alkali or alkali metal carbonate reagent is added at 51 to the first treatment vessel 41 to neutralise the withdrawn anolyte. Silver orthophosphate, Ag_3PO_4 is precipitated in the form of a very "well-behaved" granular solid. The supernatant liquid separated in first cyclone 43 contains sodium nitrate and sodium phosphate and is passed direct to discharge as waste.

The silver phosphate in the form of orthophosphate is recycled directly to the anolyte along with fresh nitric acid added via duct 53 to make up for the acid removed and neutralised. This is acceptable, because relatively little phosphate is recycled along with each mole of Ag. For example, the typical anolyte silver concentration would be about 0.5M and a phosphate limit of 1-2M would be applied. In this case the reconstituted anolyte would contain 0.5M Ag and 0.17M phosphate.

If nevertheless, it is desired to recycle no phosphate with the silver, the Ag_3PO_4 may be converted to the metal or oxide by known treatments such as those described for silver chloride above. Alternatively, the silver may be precipitated as silver chloride and converted to Ag or Ag_2O as described above.

Here again, if solids are present in the circulating anolyte, it is desirable to separate these (as by third cyclone 48, but without the subsequent distillation) before the anolyte is passed to the first treatment vessel 41.

Nitrate

Organic nitrogen appears, in whole or in part, as

nitrate after oxidation. If only minor amounts of nitrogen are present in the waste matter being oxidised, the nitrate formed in the anolyte may be tolerable or indeed beneficial in that it will offset minor losses from the system via nitrogen oxides or acid fuming. However, when large amounts of nitrate are formed, for example from the oxidation of highly nitrated species such as explosives, it is necessary to remove nitrate from the anolyte as nitric acid. This is most conveniently effected by distillation. The nitric acid distillate is removed from the system, but can be recovered as a resource for sale or re-use elsewhere. If the anolyte is relatively dilute, the condensate will be even more dilute and probably not worth recycling, in which case it would be treated as a waste stream. However, if the system is operated with anolyte acid concentration at the azeotropic composition of 65.5% HNO_3 (about 16M), then the condensate is of the same composition and therefore readily recycled to make up for minor losses.

Chloride

Organic chlorine tends to appear after oxidation as AgCl, although some chlorine gas may be evolved from the anolyte due to oxidation of chloride ions because silver chloride is very slightly soluble in nitric acid.

The operation of the separation plant 34 for removal of silver chloride is identical to that described in the first method for dealing with sulphate, except that addition of chloride to precipitate silver chloride is obviously not required. The treatment of the silver chloride precipitate for recovery of and recycle of silver as metal or oxide is otherwise identical.

Figure 3 shows the plant 37 for recovering silver

from the catholyte. All ions in solution in the anolyte as cations will migrate at their characteristic rate across the separator 13 to the catholyte under the influence of the electric field gradient between the electrodes. The silver present in the anolyte will obviously be subject to this migration so that, if no steps are taken to counter the transfer, silver concentration in the anolyte will fall and in the catholyte will rise as operation of the process takes place.

The most concentrated solution in the catholyte system is in the evaporator bottoms (23). A sidestream is withdrawn via duct 54 and fed to a treatment vessel 55 with a cooler 56. The cooling will result in precipitation of silver nitrate crystals, which are separated in cyclone 58, redissolved in water in a mixing vessel 57 and returned via pump P9 to the anode compartment 14. The liquid catholyte, reduced in silver content, from the cyclone 56 is reunited with regenerated catholyte from boiler 20 in scrubber feed tank 27.

In the absence of any other process or operation which removes nitrate from the anolyte, the above described process for recovery of silver from the catholyte will have the effect of increasing the anolyte nitrate concentration. In this case, it is preferable to convert the silver nitrate to silver metal, silver oxide or silver carbonate by reduction (chemical or electro-chemical) or precipitation using a soluble hydroxide or carbonate, prior to recycle to the anolyte.

It will be appreciated that in practice waste material undergoing decomposition will give rise to more than one of the anions discussed above. In some cases, combined treatment will be relatively straightforward as

with arisings of sulphate and chloride together. In other circumstances, it may be necessary to provide more than one separation plant operating simultaneously in different modes, or it may be possible to deal with a mixture of anion arisings using a single separation plant 34 switched periodically between different modes.

The invention is not restricted to the details of the foregoing examples. For instances, the concentration ranges specified are those regarded as desirable for satisfactory operation, but the plant is capable of operating at acid and silver concentrations outside these ranges. Cyclones have been described for separation of solids from liquids but any other convenient separation process, such as filtration or centrifugation can be employed. References have been limited to chlorine and chloride for simplicity of description, but it will be appreciated that where equivalent chemistry applies to the other halogens, corresponding processes can be adopted. Streams described as being discharged from the system may either be discharged directly to, for example, a sewer or subjected to appropriate treatment to comply with any relevant regulatory restrictions on salts, nitrate, phosphate, etc in such discharges.

Claims

1. A method of treating waste matter comprising organic matter in which method an aqueous electrolyte comprising nitric acid and containing ions of silver as an electrochemically regenerable primary oxidising species is subjected to an electric potential within an electrochemical cell (11) and the waste matter is added to the electrolyte either continuously or periodically thereby to be decomposed by an oxidation process in which the primary oxidising species is reduced and regenerated by the electric potential, characterised in that, for waste matter containing any one or more of the elements sulphur, nitrogen, chlorine, bromine or iodine such that inorganic salts or ions thereof containing these elements are formed, electrolyte is withdrawn continuously or periodically from the cell (11), treated to remove the said element or elements by precipitation, crystallisation or distillation and electrolyte returned to the cell (11).

2. A method as claimed in Claim 1, further characterised in that cobalt ions are included in the electrolyte in addition to silver ions.

3. A method as claimed in Claim 1 or Claim 2, further characterised in that the method is performed with the electrolyte temperature above 50°C to produce secondary oxidising species from the interaction of the primary oxidising species and the aqueous electrolyte.

4. A method as claimed in any one of Claims 1 to 3, further characterised in that the nitric acid has a concentration in the range 4M to 22M.

5. A method as claimed in any one of the preceding

claims, further characterised in that the electrolyte comprises a mixture of nitric acid and sulphuric acid.

6. A method as claimed in any one of Claims 1 to 4, further characterised in that the electrolyte comprises a mixture of nitric acid and phosphoric acid.

7. A method as claimed in any one of the preceding claims, wherein the waste matter contains sulphur and further characterised in that separation for removal of sulphate ions is effected by adding chloride ions to precipitate silver chloride which, after separation, is converted to silver metal or silver oxide and re-dissolved in nitric acid as reconstituted electrolyte for return to the cell (11), whilst the supernatant consisting of substantially silver-free nitric and sulphuric acids is disposed of as waste.

8. A method as claimed in Claim 7, further characterised in that, before disposing of the said supernatant, some or all of the nitric acid is recovered from the supernatant by distillation.

9. A method as claimed in Claim 8, further characterised in that the nitric acid recovered from the supernatant is returned to the cell (11).

10. A method as claimed in any one of Claims 1 to 6, wherein the waste matter contains sulphur and further characterised in that the electrolyte withdrawn from the cell is cooled to cause crystallisation of silver sulphate and, after separation, the sulphate-reduced electrolyte returned to the cell (11).

11. A method as claimed in Claim 10, further characterised in that the silver sulphate is converted to

silver oxide by treatment with caustic alkali and returned to the cell (11).

12. A method as claimed in Claim 10, further characterised in that the silver sulphate is converted to silver metal, by treatment with an alkali combined with a reducing agent, and returned to the cell (11).

13. A method as claimed in Claim 10, further characterised in that the silver sulphate is converted to silver carbonate by treatment with Na_2CO_3 solution, and returned to the cell (11).

14. A method as claimed in any one of Claims 1 to 6, wherein the waste matter contains sulphur and further characterised in that sulphate ions are removed from the withdrawn electrolyte by direct precipitation as barium sulphate and, after separation, the supernatant electrolyte is returned to the cell (11).

15. A method as claimed in any one of Claims 1 to 6, wherein the waste matter contains chlorine or other halogens and there will be direct precipitation of silver halide in the electrolyte, further characterised in that the silver halide precipitate is separated and treated to recover and return to the cell the silver as silver metal or silver oxide.

16. Apparatus for use in the treatment of waste matter comprising or including organic matter containing any one or more of the elements phosphorus, sulphur, nitrogen, chlorine, bromine, iodine, which apparatus comprises an electrochemical cell (11) having a cathode, an anode, a permeable separator (13) between the anode and cathode forming an anode region (14) and a cathode region (12) within the cell (11), an electrolyte comprising nitric

acid and containing ions of silver, means (P2) for withdrawing catholyte from the cathode region (12) and means (P4) for feeding fresh or regenerated catholyte to the cathode region (12), means (P6) for feeding the waste matter into the anode region (14), characterised in that a separate processing plant (34) is connected to withdraw anolyte continuously or periodically from the anode region (14) of the cell (11), which plant (34) comprises means for removing said element or elements by precipitation, crystallisation or distillation and for returning reconstituted anolyte to the anode region (14) of the cell (11).

17. Apparatus as claimed in Claim 16, further characterised in that the said separate processing plant (34) comprises an array of reaction vessels (41, 44, 45) and solid/liquid separators (43, 46, 48) connected by valves (V1, V2, V3, V4) so that a sequence of reaction and/or thermal treatment processes followed by separation of solid from liquid product can be selected according to which of the said elements is contained in the waste matter.

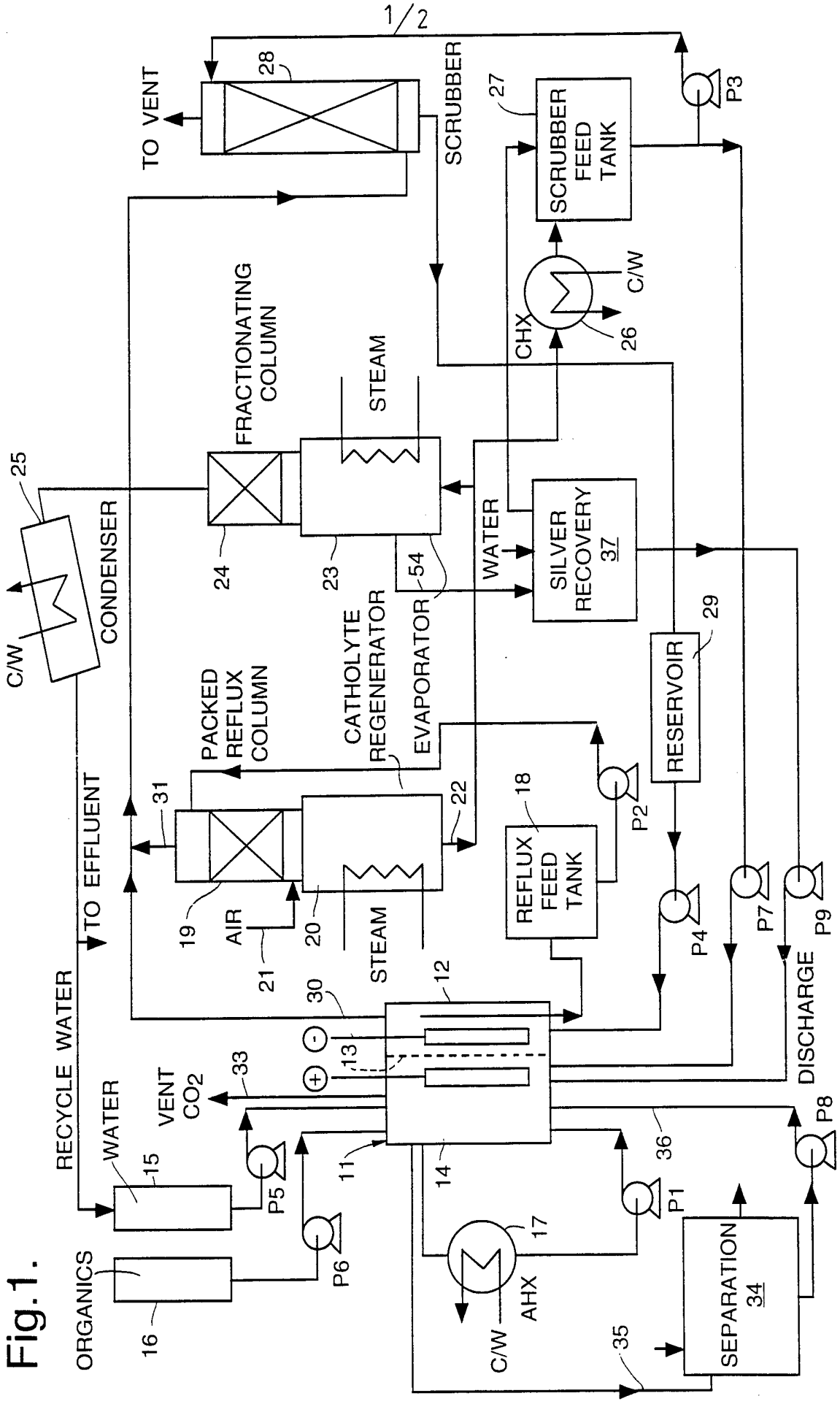
TO VENT
28
SCRUBBER
27
SCRUBBER FEED TANK
P3
C/W
CHX
26
FRACTIONATING COLUMN
STEAM
25
CONDENSER
C/W
24
23
54
WATER
SILVER RECOVERY 37
29
RESERVOIR
PACKED REFLUX COLUMN
CATHOLYTE REGENERATOR
EVAPORATOR
31
22
18
P2
REFLUX FEED TANK
TO EFFLUENT
19
AIR
21
20
STEAM
P4
P7
P9
DISCHARGE
RECYCLE WATER
30
12
13
33
VENT CO2
WATER
15
P5
11
14
36
P8
P1
17
P6
ORGANICS
16
AHX
C/W
35
SEPARATION 34

Fig.1.

Fig.2.

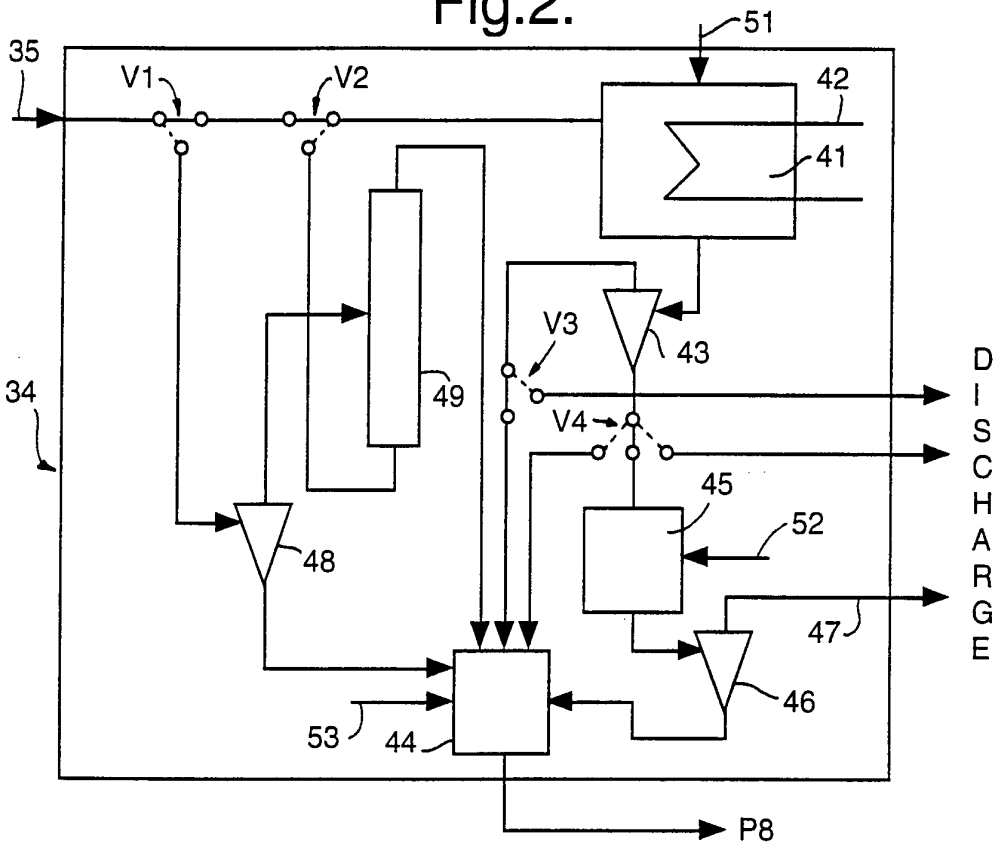
35
V1
V2
51
42
41
V3
43
49
34
V4
DISCHARGE
45
52
48
47
46
53
44
P8

Fig.3.

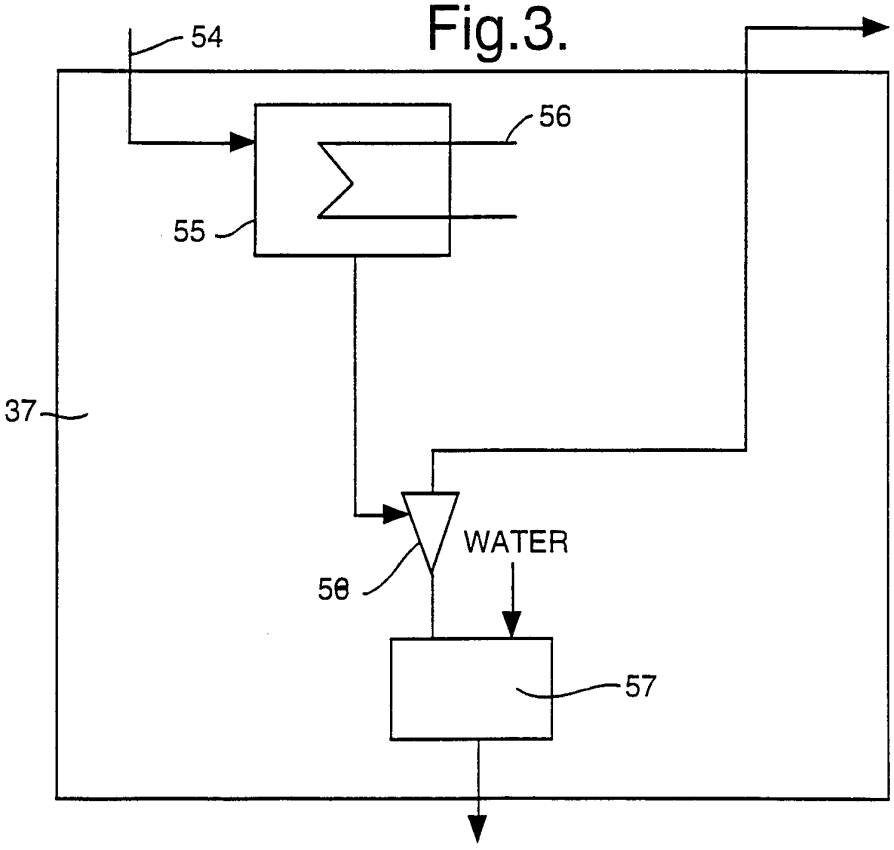
54
56
55
37
WATER
58
57

INTERNATIONAL SEARCH REPORT

Inter ɔnal Application No
PCT/GB 95/01186

A. CLASSIFICATION OF SUBJECT MATTER
IPC 6 A62D3/00

According to International Patent Classification (IPC) or to both national classification and IPC

B. FIELDS SEARCHED

Minimum documentation searched (classification system followed by classification symbols)
IPC 6 A62D

Documentation searched other than minimum documentation to the extent that such documents are included in the fields searched

Electronic data base consulted during the international search (name of data base and, where practical, search terms used)

C. DOCUMENTS CONSIDERED TO BE RELEVANT

Category °	Citation of document, with indication, where appropriate, of the relevant passages	Relevant to claim No.
A	US,A,4 585 533 (HABEEB JACOB J) 29 April 1986 see claim 19 ---	1-17
A	EP,A,0 297 738 (ATOMIC ENERGY AUTHORITY UK) 4 January 1989 cited in the application see page 4; example 4 -----	1-17

☐ Further documents are listed in the continuation of box C.

☒ Patent family members are listed in annex.

° Special categories of cited documents :

"A" document defining the general state of the art which is not considered to be of particular relevance

"E" earlier document but published on or after the international filing date

"L" document which may throw doubts on priority claim(s) or which is cited to establish the publication date of another citation or other special reason (as specified)

"O" document referring to an oral disclosure, use, exhibition or other means

"P" document published prior to the international filing date but later than the priority date claimed

"T" later document published after the international filing date or priority date and not in conflict with the application but cited to understand the principle or theory underlying the invention

"X" document of particular relevance; the claimed invention cannot be considered novel or cannot be considered to involve an inventive step when the document is taken alone

"Y" document of particular relevance; the claimed invention cannot be considered to involve an inventive step when the document is combined with one or more other such documents, such combination being obvious to a person skilled in the art.

"&" document member of the same patent family

Date of the actual completion of the international search	Date of mailing of the international search report
26 July 1995	07.09.95

Name and mailing address of the ISA	Authorized officer
European Patent Office, P.B. 5818 Patentlaan 2 NL - 2280 HV Rijswijk Tel. (+31-70) 340-2040, Tx. 31 651 epo nl, Fax: (+31-70) 340-3016	Dalkafouki, A

Form PCT/ISA/210 (second sheet) (July 1992)

INTERNATIONAL SEARCH REPORT

Inter. ...nal Application No
PCT/GB 95/01186

Patent document cited in search report	Publication date	Patent family member(s)		Publication date
US-A-4585533	29-04-86	EP-A-	0199554	29-10-86
		JP-A-	61246389	01-11-86
EP-A-0297738	04-01-89	DE-A-	3869490	30-04-92
		JP-A-	1030689	01-02-89
		US-A-	4874485	17-10-89
		US-A-	4925643	15-05-90