June 18, 1929. J. E. BRANDENBERGER 1,717,957

FILM PRINTER

Filed Nov. 23, 1926 2 Sheets-Sheet 1

Fig. 1

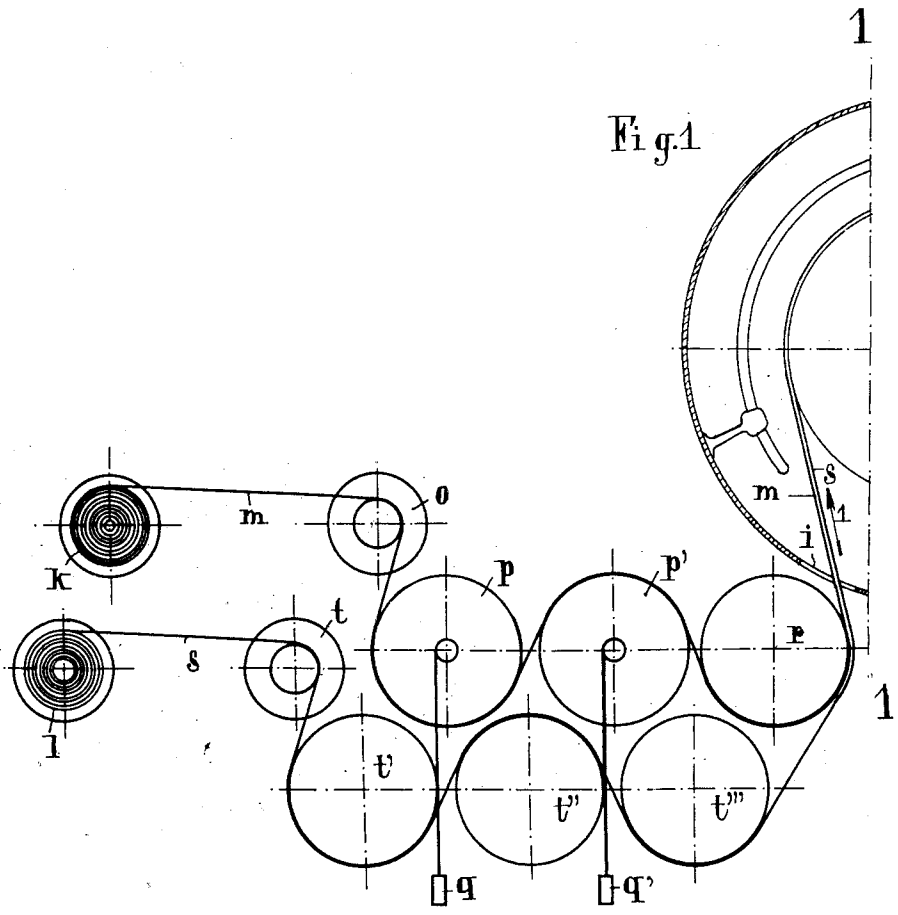

Fig. 2

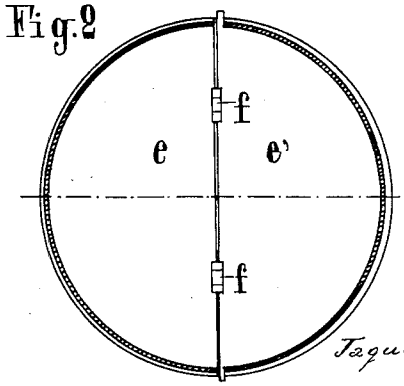

INVENTOR:
Jacques E. Brandenberger
BY
ATTORNEY

June 18, 1929. J. E. BRANDENBERGER 1,717,957

FILM PRINTER

Filed Nov. 23, 1926 2 Sheets-Sheet 2

Fig.3.

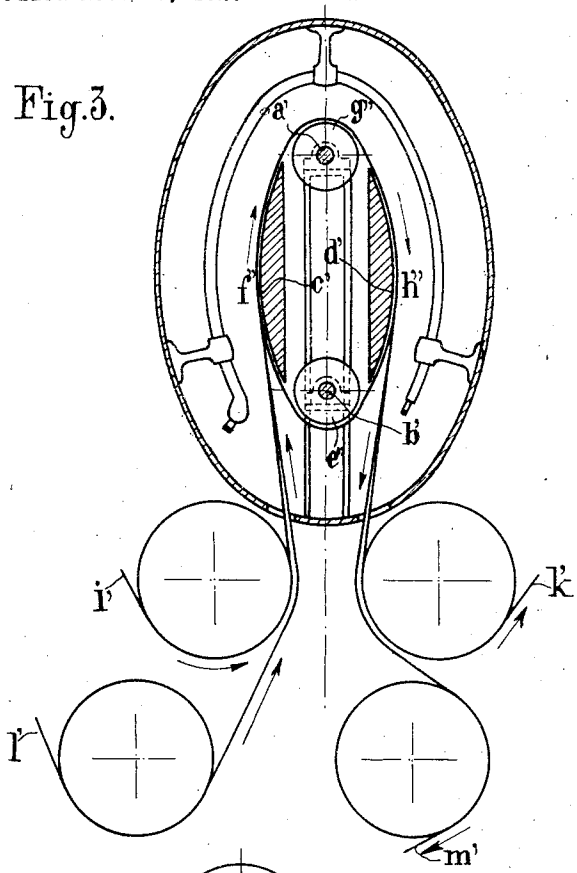

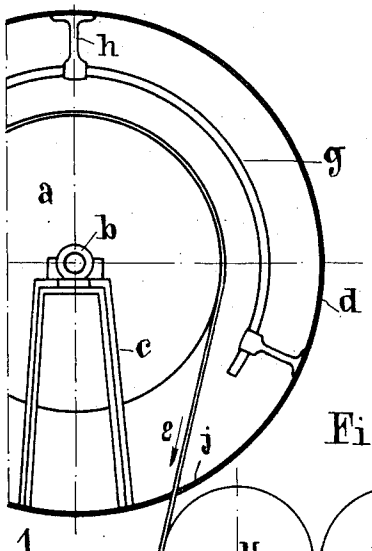

Fig.1a

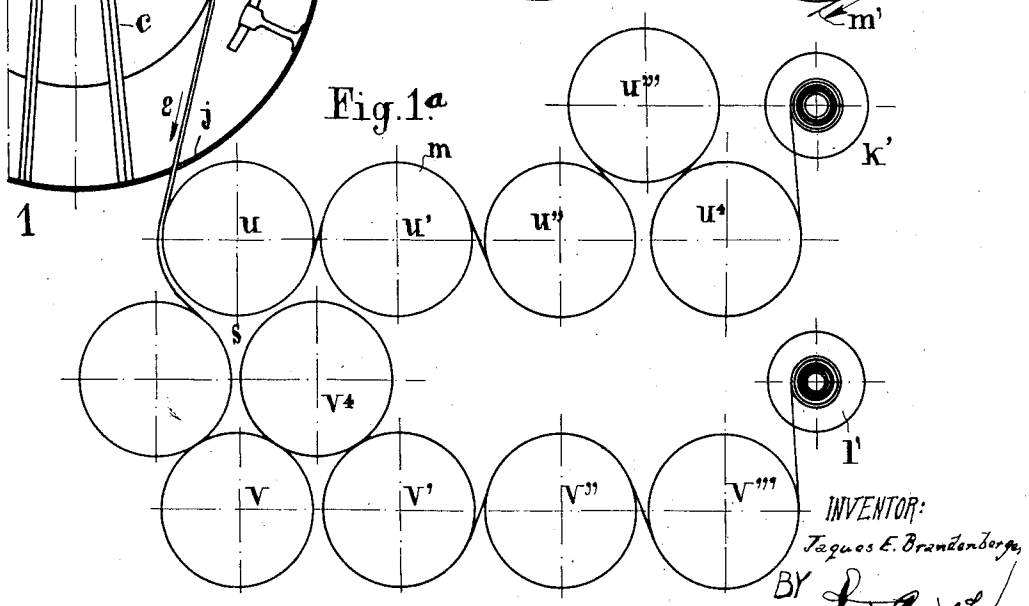

INVENTOR:
Jaques E. Brandenberger,
BY Louis Pamelee
ATTORNEY.

Patented June 18, 1929. 1,717,957

UNITED STATES PATENT OFFICE.

JAQUES EDWIN BRANDENBERGER, OF NEUILLY-SUR-SEINE, FRANCE.

FILM PRINTER.

Application filed November 23, 1926, Serial No. 150,294, and in France December 29, 1925.

The object of this invention is to provide a machine adapted to print motion picture films on a commercial scale, and especially to reprint such films while using either processes requiring comparatively long exposure, such as those known as direct shadowing, chromate, diazo base, etc., or quicker acting processes such as those through developing.

The invention which is applicable not only to commercial film printing but also to the printing of any photographic images on continuous strips, is essentially characterized by the use of an opaque roller or cylinder, made of any suitable material, e. g. iron, preferably mounted idly, and over which pass, while kept applied against one another and without any possible relative shifting, the film carrying the images to be reprinted (which film is hereinafter called the "matrix") and the film to be printed, a suitable source of light being concentrically arranged outside the cylinder and in such a way that every point of the matrix located over the film being printed will receive the same amount of light from the point where it comes to be applied on the cylinder up to the point where it is separated therefrom.

Such are the essential characteristics of the film printer which is the object of the invention, and those characteristics will subsist whatever the practical embodiment thereof.

An embodiment of the invention is illustrated in the accompanying drawings, wherein:

Figures 1 and 1ª jointly constitute a diagrammatic side elevation of a machine constructed according to the invention.

Figure 2 is an outside view of the drum containing the source of light.

Figure 3 illustrates a modification.

The opaque cylinder or roller *a*, made of iron or of any other suitable material, is mounted on a spindle adapted to rotate idly in bearings *b*, suitably supported by hangers *c*. Above and around the cylinder is positioned a suitable lamp *g*, say a mercury vapour lamp. As already stated, said lamp is so arranged that every point of the film constituting the matrix will receive the same amount of light from where it comes into contact with cylinder *a* to where it parts from this cylinder.

I wish it to be clearly understood that, as a matter of course a plurality of lamps may be used instead of a single one.

The set constituted by the cylinder and the lamp may be located in the open or within a drum *d* as shown. In the event of the set being located in the open, care should be taken to protect from light the sensitized film before it is applied to cylinder *a* and after it has left the same. In the case of a drum *d* being used, said drum may have say both its front and its rear faces closed, which closing may be effected by means, for instance, of two half-doors *e*—*e'*, hinged at *f*. Such a mounting will allow ready access to the inside of the drum and permit it to be closed again so as to insulate from outside interference all the parts located within. Of course, drum *d* should have two apertures *i* and *j*, the aperture *i* serving to admit in the direction of the arrow 1 the matrix and the film to be printed through the matrix and the other aperture *j* serving to let out the matrix and the film in the direction of arrow 2.

As will be readily understood, it is necessary to impart a speed of movement (governed by the sensitiveness of the film to be printed, by the intensity of the printing lamp, and by the lamp-to-film distance) to the matrix *m* and the film *s*, which motion or feed will rotate the idle cylinder *a*. The feed of the two films can be obtained in practice in the following manner: The matrix *m* alone is subjected to a traction that feeds it on, the required drive is exerted on the matrix after it has left cylinder *a*, and, previous to coming into contact with cylinder *a*, said matrix is subjected to a braking action.

Due to the stress so exerted on film *s*, positioned between said matrix *m* and cylinder *a*, it will be readily understood that the film will be driven by the matrix itself and that no shifting of the matrix with relation to the film or vice-versa can take place provided said film undergoes the same tension previous to reaching cylinder *a* and after departing therefrom. This last point of an equal tension on the film to be printed before and after its passage over cylinder *a* is not an absolute requisite, but if the film undergoes unequal tensions before and past cylinder *a*, then said cylinder must be stopped at the point where elemental slippages may occur.

As may be conceived, in practice any suitable device can be used to effect the above set forth conditions of matrix and cylinder operation. I will, however, indicate, as an example, the one shown by the drawings.

As will be apparent, the matrix m is wound on a magazine drum k; after running over a transmission roll o, said matrix passes over rolls p—p' which are braked by, say, weights q—q'. Guided by a last roll r the matrix then enters drum d at the same time as the film s which comes from magazine-drum l after having run over rolls t', t'', t'''. Roll r is arranged in such a way that the arc of contact of the film on cylinder a is as great as possible.

Both films issuing from the drum at j, the printed film s runs over rolls v^5, v, v^4, v', v'', v''' ultimately to wind around the taking-up drum l', to which is imparted a suitable winding drive. The tension of film s previous to its entering drum d may be adjusted by any suitable means so that it will be equal to the tension of said film on its issuing therefrom.

On issuing from drum d the matrix m runs round rolls u, u', u'', u''', u^4 and certain of these rolls, for instance rolls u'', u''', u'''', are driving rolls: these are the ones which, pulling on the matrix, effect the feed of both films m and s through the machine.

The entire mechanism, suitably supported on a frame (not shown), is located in a place illuminated by red lamps, for instance, or, at any rate, in a place the lighting of which is such as to have no action on sensitized film s.

The modification illustrated by Figure 3 consists in using in lieu of the above referred to cylinder, an endless belt made, say, of steel foil, driven by rollers a' and b', and bearing on guiding surfaces c' and d' or on a series of rollers arranged to impart to it a convex form e'', f'', g'', h'', e''. If the passive resistances are low, then, obviously, rollers a' and b' may be idle instead of driven.

The negative enters at i' and issues at k'; the sensitized strip enters at l' and comes out at m'.

It is to be clearly understood that the hereinabove described embodiment is in no way intended as limitative and that the right is reserved to introduce any desirable constructional alterations and/or modifications without being deemed to depart from the scope of the invention.

I claim as my invention:

1. Apparatus for printing motion picture film, comprising a stationary opaque casing; doors in the side walls of the casing to permit access to its interior; a support in said casing and over which a negative film and a sensitized film to be printed are adapted to pass in superposed relation, with the sensitized film in direct contact with the negative film and with the support, said casing having inlet and exit openings for said films in its bottom wall; a lamp in the casing to effect printing; means for causing the negative film to exert pressure on the sensitized film; and means for positively feeding said negative film through said casing and thereby feeding the sensitized film by reason of such pressure.

2. Apparatus for printing motion picture film, comprising an idly-rotating supporting cylinder over which a negative film and a sensitized film to be printed are adapted to pass in superposed relation, with the sensitized film in direct contact with the negative film and with the cylinder, a lamp to effect printing; means for causing the negative film to exert pressure on the sensitized film; and means for imparting a positive feed movement solely to the negative film and thereby feeding the sensitized film exclusively by reason of such pressure.

3. Film-printing apparatus comprising an idly-rotating supporting cylinder over which a negative film and a sensitized film to be printed are adapted to be passed in superposed relation, with the sensitized film in direct contact with the negative film and with the cylinder; a lamp to effect printing; means for causing the negative film to exert pressure on the sensitized film; means for subjecting the negative film to a braking action before it reaches the cylinder; and means separate from the braking means for exerting a pull solely on said negative film after it leaves the cylinder and thereby feeding the sensitized film exclusively by reason of such pressure.

4. Apparatus for printing motion picture film, comprising a stationary casing; a support therein and over which a negative film and a sensitized film to be printed are adapted to pass in superposed relation, with the sensitized film in direct contact with the negative film and with the support, said casing having inlet and exit openings for the films in its bottom wall; a lamp in the casing to effect printing; and guiding rolls individual to the two films located below the casing at both the inlet and the exit sides thereof, a negative film guiding roll at the exit side of the casing having a positive driving movement imparted to it so as to transmit such movement directly to the negative film and thereby feed the sensitized film exclusively by the pressure which is exerted on that film by said negative film.

5. Apparatus for printing motion picture film, comprising a stationary casing; a support therein and over which a negative film and a sensitized film to be printed are adapted to pass in superposed relation, with the sensitized film in direct contact with the negative film and with the support, said casing having inlet and exit openings for the films in its bottom wall; a lamp in the casing to effect printing; guiding rolls individual to the two films located below the casing at both the inlet and

the exit sides thereof, a negative film guiding roll at the exit side of the casing having a positive driving movement imparted to it so as to transmit such movement directly to the negative film and thereby feed the sensitized film exclusively by the pressure which is exerted on that film by said negative film; and means associated with a negative film guiding roll at the inlet side of the casing for subjecting the negative film to a braking action before it enters the casing.

6. Apparatus for printing motion picture film, comprising an idly movable support over which a negative film and a sensitized film to be printed are adapted to pass in superposed relation, with the sensitized film in direct contact with the negative film and with the support; a lamp to effect printing; and guiding rolls individual to the two films located below and both in front of and beyond said support, at least one guiding roll for the negative film beyond said support being positively driven so as to impart a feed movement directly to that film after it leaves the support.

7. Apparatus for printing motion picture film, comprising an idly movable support over which a negative film and a sensitized film to be printed are adapted to pass in superposed relation, with the sensitized film in direct contact with the negative film and with the support; a lamp to effect printing; and guiding rolls individual to the two films located below and both in front of and beyond said support, at least one guiding roll for the negative film beyond said support being positively driven so as to impart a feed movement directly to that film after it leaves the support, and at least one guiding roll for said negative film in front of the support having means associated with it for subjecting the said negative film to a braking action before it reaches said support.

8. Film-printing apparatus according to claim 3, in which the braking and feeding means are located below the cylinder in front of and beyond the same, respectively.

In testimony whereof I affix my signature.

JAQUES EDWIN BRANDENBERGER.