# United States Patent [19]

**Hilyard et al.**

[11] **3,709,216**

[45] **Jan. 9, 1973**


## [54] SPINE-ADJUSTMENT MECHANISM


[76] Inventors: **Byron L. Hilyard,** 3837 English Avenue, Indianapolis, Ind. 46201; **Mario C. Santarossa,** 5957 Wycombe Lane, Indianapolis, Ind. 46220



[22] Filed: **Aug. 2, 1971**

[21] Appl. No.: **168,024**

[52] **U.S. Cl.** ..... **128/69**

[51] **Int. Cl.** ..... **A61f 5/37**

[58] **Field of Search** ..... 128/68–69; 272/57 R



[56] **References Cited**

UNITED STATES PATENTS

| | | | |
|---|---|---|---|
| 32,014 | 4/1861 | Taylor | 128/69 UX |
| 41,548 | 2/1864 | Taylor | 128/69 UX |



*Primary Examiner*—Lawrence W. Trapp

*Attorney*—Robert A. Spray



[57] **ABSTRACT**

A rigid body-support and a rigid retainer provide rigid support of a person's hips and pelvic bones, achieving, when the person causes his upper torso to swing, a spinal "adjustment" of the spinal vertebrae.


**7 Claims, 5 Drawing Figures**

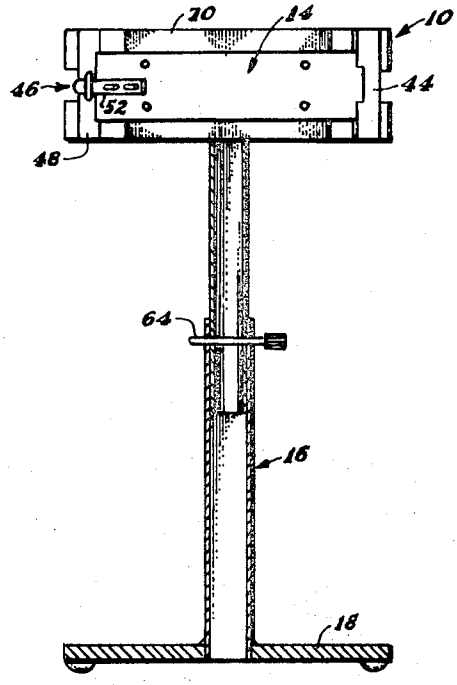

PATENTED JAN 9 1973

3,709,216

SHEET 1 OF 3

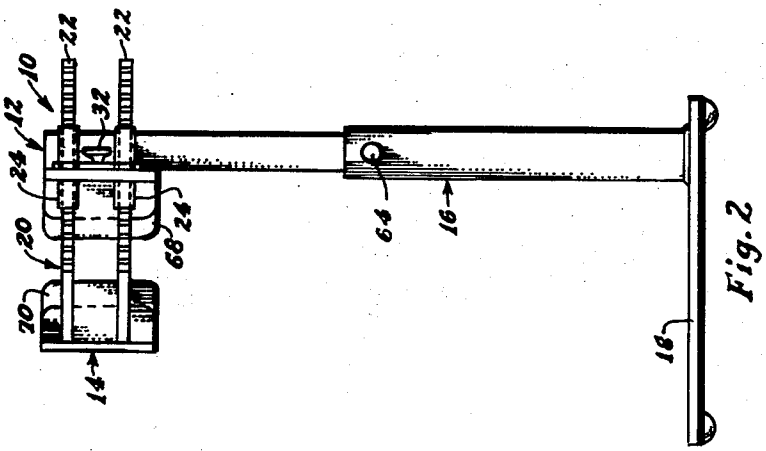


Fig. 2

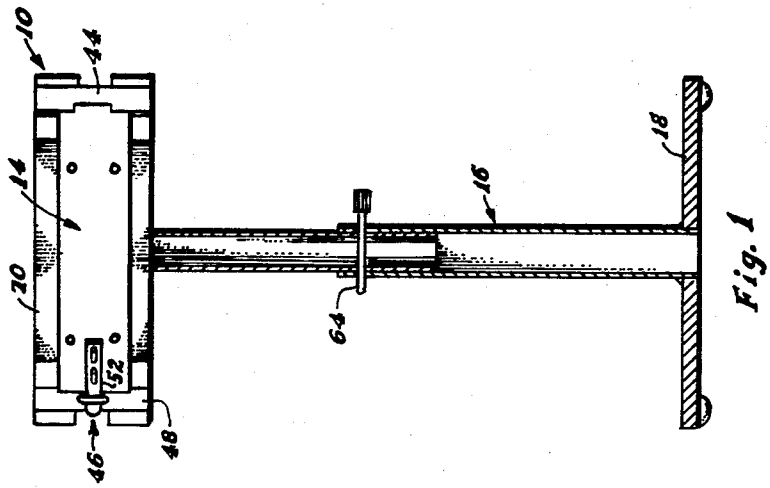


Fig. 1

*INVENTORS,*
*Byron L. Hilyard & Mario C. Santarossa,*
*BY Robert A. Spray*
*Attorney*

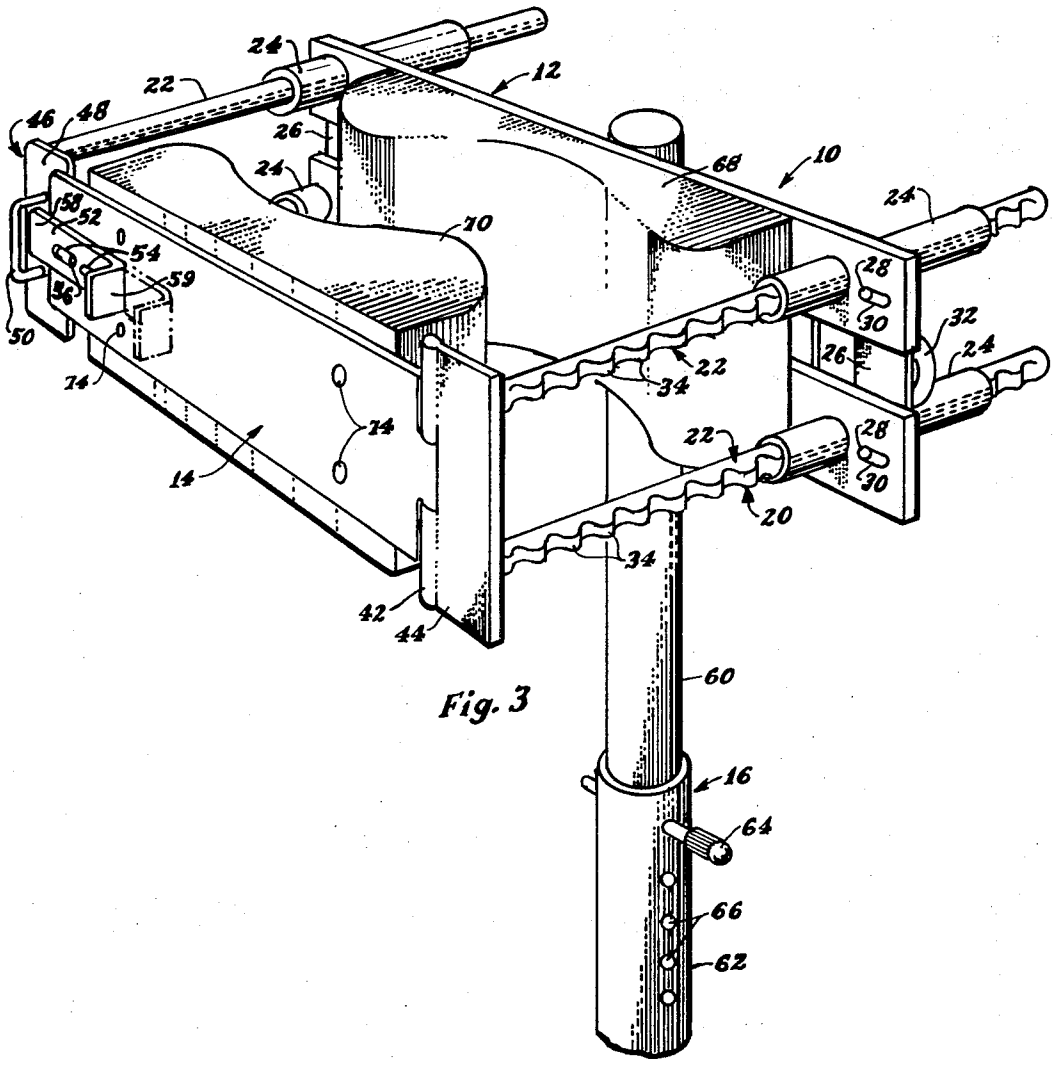


Fig. 3

INVENTORS,
Byron L. Hilyard & Mario C. Santarossa,
BY Robert A. Spray
Attorney

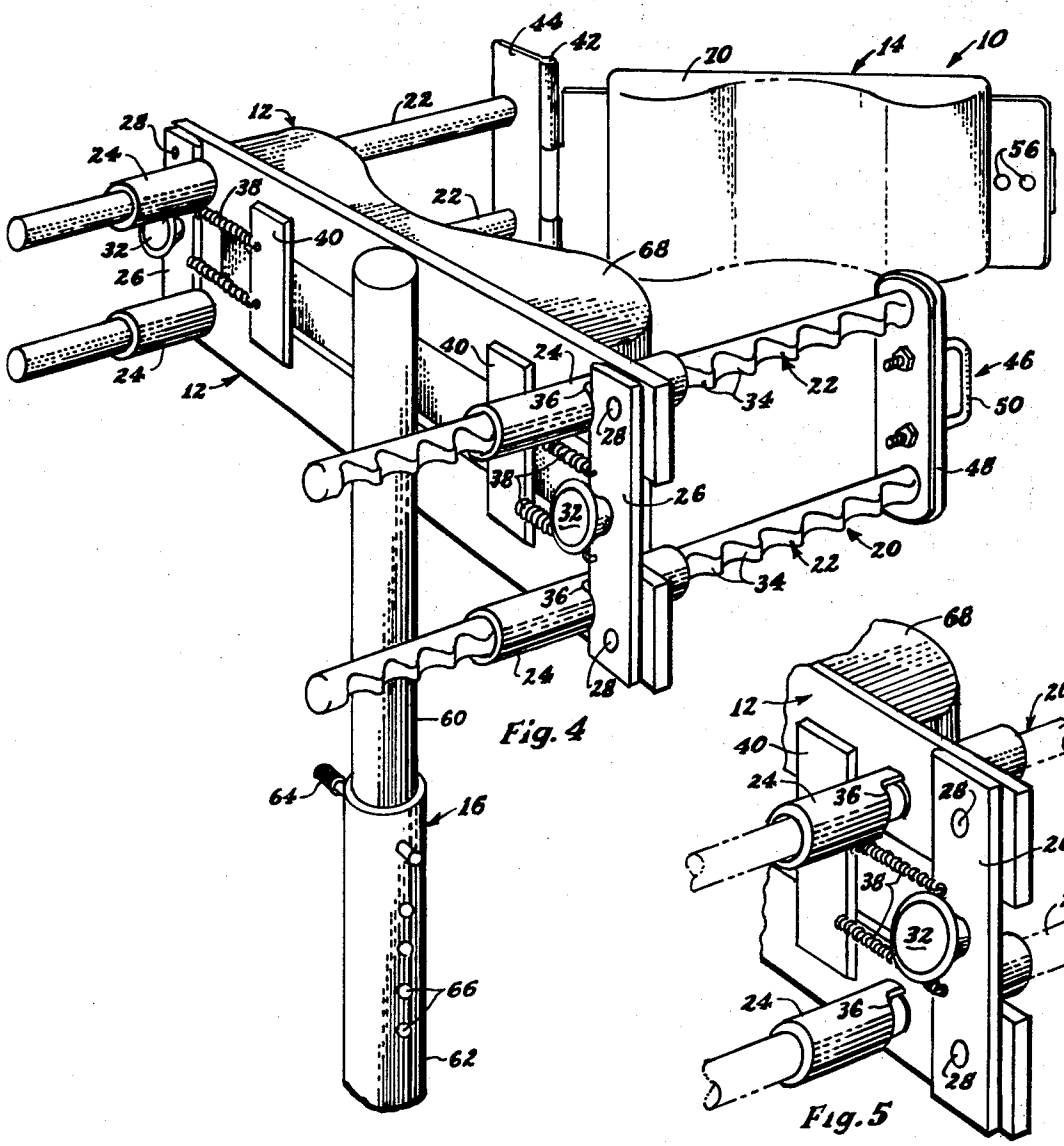


Fig. 4




Fig. 5

INVENTORS,
Byron L. Hilyard & Mario C. Santarossa,
BY Robert A. Spray
Attorney

# SPINE-ADJUSTMENT MECHANISM

This invention relates to a device or mechanism for a spinal adjustment of a person's spinal vertebrae. That is, concepts of this invention provide that a person can achieve what is referred to as a "spinal adjustment" by himself, without manual manipulation by a second party.

The inventive concepts provide a means for very rigidly holding or supporting the hips and pelvic bones of the user, but permitting free swinging movement of the portion of the persons' torso above his pelvic bones; and thus, by the person swinging his upper torso, in a simple torso-rotational swinging exercise while his hips and pelvic bones are being rigidly held by this mechanism, the persons's spinal vertebrae automatically tend to move into proper position in his spine.

Other body-strengthening and body-exercising benefits seem also inherent, as will be apparent from the fact that the mechanism provides a means for the torso-exercising while the hips and pelvic bones are rigidly held.

Obviously, as would be the situation with most any exercise device, for almost all exercise devices would likely impose some restriction upon full freedom of movement of some part of the body, an amount of prudent reason would have to be used to avoid over-exertion or over-extension. Yet this device achieves the desired spinal exercise with relatively a few body-turns, without unduly twisting the torso in either direction, and thus this mechanism provides no incentive for a person to "overdo" his exercises.

The above description is rather generalized. More detailed description of the inventive concepts and features of an embodiment to show and illustrate them, are in the following description, reference being had to the accompanying somewhat diagrammatic drawings, in which:

FIG. 1 is a front elevational view of a spine adjustment device of the present invention, the vertical support and base being shown in cross-section;

FIG. 2 is a side elevational view thereof;

FIGS. 3 and 4 are enlarged pictorial views, respectively showing the front and rear portions of the device or mechanism; and

FIG. 5 is a pictorial detail view of a portion of FIG. 4, but illustrating one of the latch members thereof in open position, during a process of adjusting the relative positions of the back-support member and the retainer member thereof.

As shown in the drawings, a spinal adjustment device or mechanism **10** illustrative of the inventive concepts generally comprises a body-support means shown as a back-support **12**, a retainer means shown as a front retainer member **14**, a vertical support **16**, and a base **18**.

Interconnecting means **20** rigidly interconnect the back-support **12** and the front retainer member **14** in such a manner that those two members (**12** and **14**) are adjustably fixed relative to one another in a plurality of relative positions, accommodating various torso sizes, and also in such a manner that the back-support **12** and the front retainer **14** are rigidly interconnected in a releasable means for permitting a person's entrance into and exit from the device **10**.

The interconnecting means **20**, in the form shown as illustrative of the device, comprises a pair of rack-like



members **22** at each side of the device **10**, each slidable in a hollow sleeve **24** rigidly secured to the back-support **12**, providing selected fore-and-aft adjustment of the relative spacing of the back-support **12** and the front retainer **14**.

A latch bar **26** (FIGS. **4** and **5**) at each side of the device **10** is shown as laterally slidable between an adjustment-securing position (FIG. **4**) and an adjustment-releasing position (FIG. **5**). That is, pins **28** which are respectively secured to the latch bars **26** are shown as slidable in horizontally extending slots **30** (FIG. **3**); and, by pulling on an adjustment knob **32** of the latch plates or bars **26**, those bars **26** are pulled outwardly from a rack-engaging position (FIG. **4**) to a rack-releasing position (FIG. **5**).

Rack-engaging position of latch bars **26**, in which the respective latch bar **26** engages the rack teeth **34** to hold fixed any selected fore-and-aft adjustment, is shown as accommodated by the outer portion of sleeves **24** being cut to provide a latch-access opening **36** (FIG. **5**); and a pair of tension springs **38**, shown connected respectively to each of the latch bars **26** and to an inner portion of the back-support **12** (fixed strips **40**) urge or bias the respective latch bars **28** to latching position.

The retainer member **14** is shown hinged by hinge **42** to a front plate **44** rigidly secured to the front end of the racks **22** at one side of the device **10**; and a retainer latch means **46** is shown for retaining the other end of retainer **14** to the other assembly of racks **22**.

Latch means **46** as shown includes a plate **48** rigidly secured to the said other rack assembly **22**, to which is shown bolted a U-shaped handle member **50**. A latch plate **52** is laterally slidably carried on the adjacent end of retainer **14**, plate **52** having elongated openings **54** through which extends a pin **56** rigidly connected to the retainer **14**; and, as best shown in FIG. **3**, the retainer latch plate **52** is movable between a retracted (rightward in FIG. **3**) position, and a latching (leftward, FIG. **3**) position in which the outer (leftward) end **58** of latch plate **52** latchingly engages the handle **50** to rigidly secure the retainer **14** to the back-support **12** after the user has positioned himself in the device for the spine-adjustment exercise. The inner (rightward) end of latch-plate **52** is shown as out-turned to provide an ear **59** for ease of moving the plate **52**.

It will be particularly noted that when a person is positioned in the device **10**, with the interconnecting means **20** adjusted for rigid tightness of the device for that particular person, that the back-support **12** and retainer member **14** will engage his hips and pelvic bones and retain them against movement yet permit free swinging movement of the person's upper torso, providing that the rigidity of his hips and pelvic bones will cause his spinal vertebrae to adjust themselves into proper position during torso-twisting movement of the person while his hips and pelvic bones are being rigidly held by the device.

The vertically entending support means **16** is vertically adjustable, as shown, by its formation from telescoping members **60** and **62**, with a position-adjustment pin **64** passing throught registering ones of openings **66** of the tubes **60** and **62**.

Padding **68-70**, respectively, held to the respective supports by screws **74**, is shown for the inner face of the

said back-support **12** and the said retainer **14**, but the flexibility of such padding **68–70** is so minimal that the person's hips and pelvic bones are nevertheless rigidly held.

The said body-support **12** and the said retainer **14** are contoured, as shown by the inner contours of the padding **68–70**, to generally follow the body contours in the region of the person's pelvic area.

It is thus seen that a spine-adjustment mechanism provides novel and advantageous concepts and features of construction and operation, achieving a rigid support device which rigidly holds a person's hips and pelvic bones such that subsequent exercise will achieve a spine adjustment without manual manipulation by another person.

Accordingly, it will thus be seen from the foregoing description of this illustrative embodiment, considered with the accompanying drawings, that the present invention provides a new and useful exerciser aid or device for a spine adjustment and back exercise, the device having desired advantages and characteristics, and accomplishing its intended objects, including those hereinbefore pointed out and others which are inherent in the invention.

Modifications and variations may be effected without departing from the novel concepts of the invention; accordingly, the invention is not limited to the specific form or arrangement of parts herein described or shown.

What is claimed is

**1**. A spine-adjustment mechanism, comprising, in combination, a rigid back-support means, a rigid retainer means, means rigidly but releasably interconnecting said body-support means and said retainer means, and position means which rigidly support the back-support means in a position such that a person may stand adjacent to said back-support means and said means in co-operation with said retainer means will engage his hips and pelvic bones and retain them against movement yet permit free swinging movement of the person's upper torso, providing that the rigidity of his hips and pelvic bones will cause his spinal vertebrae to adjust themselves into proper position during torso-twisting movement of the person while his hips and pelvic bones are being rigidly held by said mechanism.

**2**. This invention as set forth in claim **1** in a combination in which said position means includes a floor-engageable base and a vertically-extending support means rigidly interconnecting said body-support means and said base.

**3**. The invention as set forth in claim **2** in a combination in which the vertically extending support means is vertically adjustable.

**4**. The invention as set forth in claim **1** in a combination in which the body-support means is a back-support means adapted to engage the person's back, and the retainer means is adapted to overlie the front of the person's torso.

**5**. The invention as set forth in claim **1** in a combination in which the said body-support means and the said retainer means are provided with padding, but the flexibility of such padding is so minimal that the person's hips and pelvic bones are nevertheless rigidly held.

**6**. The invention as set forth in claim **1** in a combination in which the said body-support means and the said retainer means are contoured to generally follow the body contours in the region of the person's pelvic area.

**7**. The invention as set forth in claim **1** in a combination in which the said interconnecting means are adjustable into a plurality of relative positions accommodating various torso sizes, and securing means rigidly secure said interconnecting means in a selected one of said plurality of relative positions.

* * * * *