PCT WORLD INTELLECTUAL PROPERTY ORGANIZATION
International Bureau

INTERNATIONAL APPLICATION PUBLISHED UNDER THE PATENT COOPERATION TREATY (PCT)

(51) International Patent Classification 6 :		(11) International Publication Number:
H04K 1/00, H04L 9/00, 17/02	A1	WO 95/26085
		(43) International Publication Date: 28 September 1995 (28.09.95)

(21) International Application Number: PCT/US95/03578

(22) International Filing Date: 20 March 1995 (20.03.95)

(30) Priority Data:
08/210,200 18 March 1994 (18.03.94) US

(71) Applicant *(for all designated States except US)*: INNOVONICS, INC. [US/US]; Suite 200, 21644 N. Ninth Avenue, Phoenix, AZ 85027 (US).

(72) Inventor; and
(75) Inventor/Applicant *(for US only)*: CLARK, Dereck, B. [US/US]; 3642 W. Camino Real, Glendale, AZ 85310 (US).

(74) Agents: KELLY, Michael, K. et al.; Snell & Wilmer, 400 East Van Buren, Phoenix, AZ 85004-0001 (US).

(81) Designated States: AM, AT, AU, BB, BG, BR, BY, CA, CH, CN, CZ, DE, DK, EE, ES, FI, GB, GE, HU, JP, KE, KG, KP, KR, KZ, LK, LR, LT, LU, LV, MD, MG, MN, MW, MX, NL, NO, NZ, PL, PT, RO, RU, SD, SE, SI, SK, TJ, TT, UA, US, UZ, VN, European patent (AT, BE, CH, DE, DK, ES, FR, GB, GR, IE, IT, LU, MC, NL, PT, SE), OAPI patent (BF, BJ, CF, CG, CI, CM, GA, GN, ML, MR, NE, SN, TD, TG), ARIPO patent (KE, MW, SD, SZ, UG).

Published
With international search report.

(54) Title: METHODS AND APPARATUS FOR INTERFACING AN ENCRYPTION MODULE WITH A PERSONAL COMPUTER

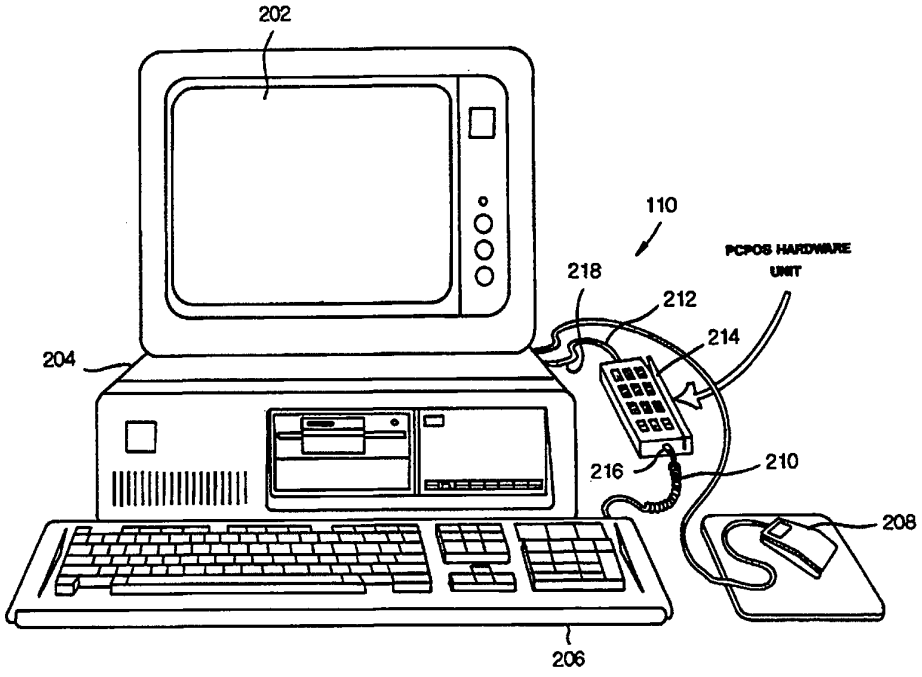

(57) Abstract

An encryption module for encrypting financial and other sensitive data may be conveniently interposed in series between a personal computer and the keyboard associated therewith. An application program designed to run on the PC is configured to prompt the user to enter his PIN or other confidential data into the encryption module; consequently the confidential data need not be transmitted in an unencrypted fashion, and need not reside on the PC hard drive in an unencrypted form.

FOR THE PURPOSES OF INFORMATION ONLY

Codes used to identify States party to the PCT on the front pages of pamphlets publishing international applications under the PCT.

AT	Austria	**GB**	United Kingdom	**MR**	Mauritania
AU	Australia	**GE**	Georgia	**MW**	Malawi
BB	Barbados	**GN**	Guinea	**NE**	Niger
BE	Belgium	**GR**	Greece	**NL**	Netherlands
BF	Burkina Faso	**HU**	Hungary	**NO**	Norway
BG	Bulgaria	**IE**	Ireland	**NZ**	New Zealand
BJ	Benin	**IT**	Italy	**PL**	Poland
BR	Brazil	**JP**	Japan	**PT**	Portugal
BY	Belarus	**KE**	Kenya	**RO**	Romania
CA	Canada	**KG**	Kyrgystan	**RU**	Russian Federation
CF	Central African Republic	**KP**	Democratic People's Republic of Korea	**SD**	Sudan
CG	Congo			**SE**	Sweden
CH	Switzerland	**KR**	Republic of Korea	**SI**	Slovenia
CI	Côte d'Ivoire	**KZ**	Kazakhstan	**SK**	Slovakia
CM	Cameroon	**LI**	Liechtenstein	**SN**	Senegal
CN	China	**LK**	Sri Lanka	**TD**	Chad
CS	Czechoslovakia	**LU**	Luxembourg	**TG**	Togo
CZ	Czech Republic	**LV**	Latvia	**TJ**	Tajikistan
DE	Germany	**MC**	Monaco	**TT**	Trinidad and Tobago
DK	Denmark	**MD**	Republic of Moldova	**UA**	Ukraine
ES	Spain	**MG**	Madagascar	**US**	United States of America
FI	Finland	**ML**	Mali	**UZ**	Uzbekistan
FR	France	**MN**	Mongolia	**VN**	Viet Nam
GA	Gabon				

METHODS AND APPARATUS FOR INTERFACING AN ENCRYPTION MODULE WITH A PERSONAL COMPUTER

Technical Field

The present invention relates, generally, to methods and apparatus for remotely effecting financial transaction and, more particularly, to a technique for transmitting encrypted data to a host computer from a remote personal computer.

Background Art And Technical Problems

Systems for performing financial transactions from a remote location, e.g., the home, office, or retail facility, are becoming increasingly popular. The proliferation of personal computers, and particularly in conjunction with modems, permits a consumer to effect bill paying, retail purchasing, banking, and other commercial transactions remotely, thus avoiding the need to travel with an order to attend to routine commercial matters.

Presently known systems typically comprise a host computer located at a central data processing site, which is configured to communicate with a large number of remote personal computers (PC). When an individual desires to effect a financial transaction, for example to order merchandise and pay for the merchandise with a credit card, the user constructs a data link between his PC and the host computer via the PC's modem. Upon ordering the appropriate merchandise, the user may enter a credit card number corresponding to the account to which the merchandise is to be charged. The purchase request is then transmitted from the PC to the host computer, whereupon the transaction is verified by the host computer.

Presently known systems are limited, for example in their ability to effect the real time transfers of funds, due to various problems associated with the transmission of encrypted data. More particularly, real time transfer of funds are typically effected through the use of an automatic teller machine (ATM). In a typical ATM transaction, the user enters an account number onto a keypad or, alternatively, inserts a bank card into the ATM whereupon the account information is "read" from the magnetic strip located on the back of the bank card. Thereafter, the user enters a personal identification number (PIN) into the keypad to enable the transaction. By properly entering the PIN associated with the bank card, the fraudulent use of such cards is greatly reduced. The extension of the aforementioned ATM paradigm to home use is problematic, however, in that presently known systems for transmitting encrypted data (e.g. PINS) are unsatisfactory.

More particularly, although techniques for encrypting PINs and other confidential data and information are generally well known, current banking and other financial industry regulations are calculated to limit the extent to which confidential data may be transmitted in an non-encrypted form. In the context of a personal computer used to remotely effect a commercial transaction, it is possible

to encrypt the confidential data at the PC and thereafter transmit the encrypted data to the host computer. However, presently known systems generally require that the confidential data (e.g. PIN) be entered into the computer via the keyboard associated with the PC, whereupon the PC's processor controls the encryption process. Thus, the data is essentially transmitted from the keyboard to the PC mother board over the physical wires connecting the keyboard to the PC box. Thereafter, the unencrypted data, i.e., prior to completing the encrypting process, necessarily resides on the mother board, for example prior to and during the encryption process. It is believed that sophisticated electronic "listening" devices could thus be employed to detect the confidential data between the time it is entered into the keyboard by the user and the time at which encryption is complete.

A system is thus needed which overcomes the shortcomings of the prior art.

Summary of the Invention

The present invention provides methods and apparatus for transmitting encrypted data which overcomes the shortcomings of the prior art.

In accordance with one aspect of the present invention, the system for transmitting encrypted data comprises a host computer connected to a remote data processing device (e.g. PC) which Includes a keyboard or other suitable mechanism for entering confidential data into the remote device. In accordance with a first embodiment of the Invention, the remote processing device comprises a conventional personal computer having an alphanumeric keyboard connected thereto via a conventional electronic wire, there being an encryption module Interposed between the keyboard and the PC mother board. In accordance with this first embodiment, the encryption module comprises a keypad which permits the user to directly enter confidential data (e.g. PIN) into the encryption module. The encryption module thereafter encrypts the confidential data and transmits the encrypted data to the PC, whereupon the encrypted data may be transmitted to the host computer via modem. In this way, the data need not reside in the PC in an unencrypted form; moreover, the data is transmitted from the encryption module to the PC in an encrypted form, thereby reducing the risk that electronic "listening" devices may intercept the unencrypted data.

In accordance with the second embodiment of the present Invention, the encryption circuitry is integrated Into a keyboard associated with a PC, such that confidential data may be encrypted in the keyboard Itself such that the confidential data is transmitted to the PC and manipulated by the PC in an encrypted form.

In accordance with the third embodiment of the present invention, a self contained, stand alone transaction module comprises a processor having an integral keypad associated therewith, such that confidential data may be entered into the keypad and encrypted within a single, integral unit, thus avoiding the need for transmission wires between a remote keypad and the encryption processing circuitry.

In accordance with the further aspect of the invention, the encryption module may be equipped with various peripheral devices useful in entering data and information, for example magnetic head card readers, "smart card" or integrated circuit card (ICC) readers, bar code readers, voice recognition devices, scanners, and the like. In this way, confidential data in virtually any medium may be entered into the encryption module and encrypted prior to subsequent processing and transmission, such that the potential for the unauthorized detection of the unencrypted data is minimized.

Brief Description Of The Drawing Figures

The present invention will hereinafter be described in conjunction with the appended drawing figures, wherein like numerals designate like elements, and

Figure 1 is at schematic block diagram of a transaction authorization system in accordance with the present invention;

Figure 2 is a front elevation view of a personal computer having an encryption module integrated therewith;

Figure 3 is a schematic block diagram of an integral encryption module;

Figures 4 and 6-10 are flow charts setting forth the operation of an exemplary application program executed by the PC of figure 2 in accordance with the present invention;

Figure 5 is a display of various icons useful in conjunction with the software shown in figure 4;

Figure 11 is an alternate embodiment of the encryption module shown in figure 2;

Figure 12 is a schematic block diagram of the functional aspects of the encryption module of figure 2;

Figure 13 is a schematic circuit diagram of the processor embodied in the encryption module of figure 2;

Figure 14 is a schematic circuit diagram of the keypad shown in Figure 2; Figure 15 is a schematic circuit diagram of an analog switch used in the encryption module of the present invention;

Figures 16 and 17 are schematic circuit diagrams of a magnetic strip reader circuit;

Figures 18-20 are schematic memory maps of various memory sectors associated with the processor of figure 13; and

Figures 21-36, are flow chart diagrams setting forth various functional features of the encryption module of the present invention.

Detailed Description of Preferred Exemplary Embodiments

Referring now to Figure one, a remote transaction system 100 suitably comprises a host computer system 102 which may be interfaced with one or more transaction networks, for example a bill paying network 104, a banking system network 106, and various other network systems 108,

for example state lottery purchase networks, retail shopping purchase networks, mail order purchase networks, and the like. Remote transaction system 100 further comprises a plurality of remote data processing terminals 110a-110n, for example a personal computer of the type typically used by a home consumer. Remote transaction system 100 may also comprise various diagnostic and maintenance apparatus for example a network transmit test system 112 and a network transmit receive system 114 suitably utilized to periodically test the performance of host computer system 102, and an audit system 116 which permits the operator of system 100 to periodically audit the data and information resident within host computer 102.

As discussed in greater detail below, various networks 104-108 are suitably operated by Independent entities which desire to conduct business and/or other transactions with various consumers through host computer 102 for example wherein each of respective PC's 110A-110N are conveniently disposed within a consumers home, office, retail outlet, and the like.

In accordance with a preferred embodiment of the present invention, data, including confidential data, may be entered into one of respective PCs 110, and encrypted as discussed in greater detail below, the encrypted data thereafter being transmitted from the PC to host computer 102 along a suitably data link 118. In accordance with one aspect of the invention, data link 118 may comprise a transmission wire (e.g. a telephone line, fiber optic cable, or the like) or alternatively may comprise a wireless link for example microwave, RF or other suitable data transmission medium.

Referring now to Figure 2, in accordance with a preferred embodiment of the present invention, an exemplary PC 110 suitably comprises a screen 202, a box 204 for housing, inter alia, the computing circuitry associated with PC 110, a keyboard 206 connected to box 204 via a connector 210, and a mouse 208 useful in executing interactive programs. In a first preferred embodiment of the present Invention, an encryption module 214 may be conveniently interposed between keyboard 206 and box 204, for example in series with connector 210. In the illustrated embodiment, module 214 suitably comprises a module connector 212 configured to permit easy installation of module 214. More particularly, a distal end 216 of connection 210 is normally plugged into a mating connector (not shown) on box 204 during formal operation of the PC. When it is desired to install nodule 214, connector end 216 may simply be detached from box 204, and a distal end 218 of connector 212 connected to box 204 at the same site end 216 of connector 210 is suitably connected to module 214, for example in much the same manner as distal end 216 would otherwise be connected to box 204. In this way, module 214 may be conveniently interposed between keyboard 206 and box 204 without opening box 204, a procedure not readily acceptable to most computer users.

In an alternate embodiment of the subject invention, the encryption circuitry and various of the peripheral devices discussed herein associated with module 214 may be conveniently incorporated into Keyboard 206 during manufacture or, retrofit, thus avoiding the need for at least the keypad portion of module 214.

With momentary reference to Figure 3, yet a further alternative embodiment suitably comprises a self contained, integral module 300 including at screen 306, a computer 304, a keyboard 302, a modem connection 308, and an accessory connector 310 for interfacing module 300 with various preferred devices, for example bar code readers, smart card readers, magnetic strip readers and the like. In accordance with the embodiment in Figure 3, only those components necessary to effect the specific functions discussed need be incorporated into module 300 resulting in substantial cost savings over the PC embodiment shown in Figure 2. However, it will be appreciated that, for those consumers who already own a PC, the embodiment illustrated in Figure 2 may be preferable in as much as a conventional PC may be readily adapted in accordance with the present invention by incorporating module 214 into PC 110.

Referring now to Figures 4-10, an exemplary remote transaction application program useful in accordance with the present invention will now be described.

Particular reference to Figure 4, a suitable application program may be executed using a (WINDOWS) format which presents the user with various menu selections. Those skilled in the art will appreciate that the use may select various options using keyboard 206 or mouse 208 (see Figure 2) as is known in the art. Although the subject application program is described herein in the context of the WINDOWS embodiment, it will be appreciated that the subject invention may be implemented in the context of any convenient applications environment.

With continued reference to Figure 4, upon activating the WINDOWS capability of PC 110 (Step 402), the user may select one of a plurality of menu options 406-416, for example by double clicking mouse 208 (Step 404). More particularly and with momentary reference to Figure 5, the user may select banking operation 406 corresponding to icon 506, a bill paying operation 408 represented by icon 508, a neighborhood shopping operation 410 represented by icon 510, a mail ordering operation 412 represented by icon 512, a state lottery operation 414 represented by icon 514, a file operations 416 corresponding to 516, at PC setup operation 418 corresponding to icon 518, a hardware test operation 420 corresponding to icon 520, a display time operation 422 corresponding to Icon 522, or a tutorial operation 424 represented by icon 524. Although the illustrated icons shown in Figure 5 are useful in the context of the illustrated embodiment, it will be appreciated that any suitable Icon or other mechanism for selecting various program options may be employed in the context of the present invention. Moreover, the menu options set forth in figures A and 5 are merely exemplary; various combinations of the menu options shown in the figures, alone or in combination with other menu options not set forth herein may also be employed in the context of the present invention.

With continued reference to Figure 4, tutorial operation 424 suitably entails an explanation of the various menu options and an explanation of how to use the options. Display time option 422 suitably displays the system time in any desired format. Hardware test operation 420 is suitably

configured to allow the user to verify the integrity of various hardware components and preferable devices useful in the context of the present invention.

Setup operation 418 suitably permits the user to configure various perimeters associated with the operation of the system and methods discussed herein.

File operation 416 suitably allows the user to manipulate various data structures useful in the context of the present invention.

Lottery operation 414 may be configured to permit the user to purchase lottery tickets for example via modem from his state of residence or from any other state or municipality, depending on the regulation governing the sale of such tickets.

Mail ordering operation 412 suitably entails procedures for ordering merchandise from PC 110, for example from a mail order catalog. In this regard, module 214 (see Figure 2) or, alternatively, box 204 may be suitably equipped with a bar code reader so that merchandise may be automatically selected by scanning bar code associated with the merchandise. The same bar code technic may also be employed in the context of shopping operation 410, which suitably entails procedures for permitting a user to order various products e.g. grocery products, by entering of the ordered item into PC 110.

In accordance with the further aspect of the invention, neighborhood shopping operation 410 may be further Implemented with the use of a bar code reader in the following manner.

Various consumer products are typically equipped with a UPC label, bar code, or other indicia representing the particular product. A bar code reader assembly (not shown), for example a hand held wand, may be suitably used by the consumer to enter into a memory array associated with the bar code reader products which the consumer desires to purchase, for example from a grocery store. After accumulating products which the consumer desires to purchase for a period of time. The product in dicit stored in the bar code reader memory may be "dumped" into an appropriate memory location in PC 110 during the operation of, for example, shopping operation 410. In this way, the consumer may select the products to be purchased over a period of time, analogous to constructing a grocery list. When it is desired to purchase the items; indicia of the accumulated list may be transmitted via data link 118 (see Figure 1) to host computer 102 whereupon a grocery network 108 retrieves the data and assembles the groceries for the consumer. If desired, the grocery store cooperating with grocery network 108 may deliver the grocery items to the consumer's residence, with the groceries being paid for of in accordance with, inter alia, the principles set forth in bill paying operation 408 or banking operation 406 as described in greater detail below.

Referring now to figures 4 and 6, banking operation 406 suitably permits the user to select one or more banking options, for example a funds transfer operation 602, and account inquiry operation 604, or a smart card funds transfer 606. In addition banking operation 406 may also permit the user to exit to the main menu 400 (Step 608).

Referring now to figures 6 and 7, funds transfer operation 602 suitably entails a selection of a particular bank account (Step 610), for example a savings account, checking account, money market account, and the like. When the account which the user desires to debit is selected, the system suitably prompts the user to enter an amount which is to be transferred or paid (Step 702), for example by entering an amount into PC 110 via keyboard 206 (704). If no amount is entered after a predetermined time or if an incorrect amount (e.g. "zero", a negative amount, or an amount which exceeds the predetermined threshold), the system may resume its previous processing path (Step 706). If a correct amount of funds to be paid or transferred is entered by the user, the user may be suitably prompted to select the method of payment (Step 708), whereupon a transaction request is suitably transmitted from PC 110 to module 214 (Step 710), as discussed in greater detail below.

In accordance with one aspect of the present invention, it may be desirable to permit particular transactions, e.g. transactions involving the transfer of money, only upon the satisfaction of certain threshold conditions. For example, it may be desirable to permit a funds transfer only if a receipt evidencing the transaction may be printed at a printer which is located proximate PC 110.

More particularly and with continued reference to Figure 7, the system may be suitably configured to confirm: (1) whether PC 110 is equipped with or otherwise has access to a local printer; (2) that the aforementioned printer is equipped with paper upon which a receipt may be printed (Step 712).

If PC 110 either does not have a printer associated with it or if it has a printer but the printer it out of paper, the system may prompt the user to install an appropriate printer and/or paper (Step 714), whereupon the system again checks to confirm the presence of a functional printer (Step 718). If a functional printer still is not detected, an appropriate error message is generated.

If it is determined that PC 110 has a functioning printer (loaded with paper) associated therewith, PC 110 is suitably configured to transmit a command to module 214 which causes module 214 to enter a "swipe" mode of operation (Step 716), discussed in greater detail below in conjunction with figures 27 and 28. The user may thereafter enter the appropriate account data, for example by swiping a transaction card through a magnetic card reader, entering a smart card into a smart card reader associated with PC 110 entering account data via keyboard 206, or any other convenient mechanism for entering account data associated with PC 110 or modem 214 (Step 720).

Referring now to Figure 8, once the account data is entered, PC 110 may suitably be configured to display the account data on screen 202 (Step 802). The particular transaction being performed by the user is of a type which does not require the transmission of confidential data (e.g. PIN), the account data and the funds transfer/bill payment data discussed above may be assembled and transmitted to host computer 102 via data link 118 for processing (Step 812). "If, on the other hand, the particular transaction requires the entry of confidential information, the system may be suitably configured to prompt the user to enter such confidential information (Step 804).

More particularly, in order to facilitate the entry, encryption and transmission of encrypted confidential data, PC 110 may be suitably configured to send a command signal to module 214 to place module 214 into a "scan" mode (Step 806), as discussed in greater detail below in conjunction with figures 21 and 25. In accordance with the embodiment shown in Figure 2, the user may then enter such confidential information via the keypad associated with module 214 or in the context of the embodiment shown in Figure 3, via keypad 302. In the alternate embodiment discussed above wherein the encryption circuitry and/or software is integrated into keyboard 106, the user may enter the confidential information directly via keyboard 206. In any event, the manner in which module 214 (or module 300 in accordance with the embodiment shown in Figure 3) receives, encrypts, and transmits the encrypted data is discussed more fully in conjunction with figures 21-29.

Upon entering all the information necessary to reflect a particular transaction, the system may suitably prompt the user to determine whether the user desires to enter another transaction. If so, the system returns to Step 702; if no further are desired, PC 110 suitably packages and transmits the transaction data to host computer 102 via data link 118. In this regard, any suitable mechanism for data transmission may be employed, for example a modem connected to box 204 or, alternatively a modem connected directly to module 214 as discussed in greater detail below (Step 812).

Once host 102 has confirmed the transaction (Step 814), the printer (not shown) associated with PC 110 and discussed above suitably prints a transaction record (receipt) (Step 816), and the system again returns to main menu 400 (Step 818).

Returning now to Figure 6, if the user desires to inquire as to an account balance and/or its (Step 604), the system may suitably be configured to prompt the user to select a particular account subject to inquiry (Steps 612), whereupon the system suitably returns to Step 712 (see Figure 7).

If the user selects smart card fund transfer operation 606, the system may be suitably configured to prompt the user to insert a smart card into an appropriate smart card reader module (Step 614) (not shown).

More particularly and with reference to Figure 9, those skilled in the art will appreciate that integrated circuit cards (ICC), also known as smart cards, typically comprise a microprocessor embedded within the card, as well as an electronic mechanism for permitting data transfer to and from the card. That being the case, account information and, indeed, funds may be electronically "added" to or "subtracted" from the card by making appropriate modification to the data resident on the card.

With continued reference to Figure 9, if the user desires to add funds to the smart card (Step 902), the system may be suitably configured to effect a process analogous to that set forth in Figure 7; namely, the user may select an account from which funds are to be withdrawn and applied to the smart card, as well as the amount funds to be so applied. The user may then be prompted to enter the smart card into a smart card reader/writer module (not shown) affiliated with either PC 110 or module 214 to effect the electronic update of the data resident on the smart card. In addition, the

system way be configured to require a functioning printer as a prerequisite to effecting the foregoing smart card updating function, as desired.

If, on the other hand, the user desires to "withdrawal" funds from the smart card (Step 904), the system may prompt the user to select the destination of the funds withdrawn from the smart card (Step 906), and to request the user to enter a PIN or other confidential data (Step 908). In this regard, the entry of such confidential information is suitably effected in a manner analogous to that described below in conjunction with figures 11, 14, and 25-28. Upon entry of the PIN, the smart card transaction may be suitably affected via the smart card reader/writer circuit (not shown) associated either PC 110 or module 214.

Referring once again to Figure 4, upon the selection of bill paying operation 408, the system may be configured to prompt the user to add a new bill to the bill paying operation (Step 1002). More particularly, the bill paying function of the subject system suitably entails a method of keeping track of various bills, for example department store bills, credit card bills, utility bill, and the like in conjunction with PC 110. If the user desires to add a new billing entity to the billing operation, for example a new department store charge account, the data corresponding to the new account may be entered into PC 110 by the user (Step 1008), for example via keyboard 206.

The system may be further configured to display various bills comprising billing operation 408 (Step 1004), permitting the user to either exit to the main menu (Step 1010) or, alternatively, to select a particular bill for payment (Step 1006). Once a particular bill is selected for payment, the system is suitably configured to effect payment of the bill in accordance with the Steps described upon in conjunction with Figure 7.

It will appreciated at various times during the execution of the foregoing application program, the users require to enter various account, PIN, and other information and/or data into the system, for example via module 214. Thus, in accordance with one aspect of the present invention, module 214 may be suitably configured to assume a plurality of different modes, depending on the particular function then being effected. The circuitry comprising module 214 which permits module 214 to assume these various operational states will now be described, followed by a functional description of the various operation modes associated with module 214.

With momentary reference to Figure 11, module 214 may suitably assume any desired configuration, for example the sloping, contoured embodiment shown in Figure 11. In particular, module 214 suitably comprises a housing 1100, for example an injection molded plastic housing similar to the conventional "mouse" typically employed in conjunction with personal computers. In accordance with the embodiment shown in Figure 11, module 214 suitably comprises a keypad 1102, for example corresponding to the numbers 0-9, and further including inter alia, various functional, for example an enter (E) and cancel (C) button. Module 214 further comprises a card reader slot 1104

configured to receive transaction cards of the type bearing a magnetic strip, and an ICC (smart card) slot 1106 configured to accept a smart card into read and/or write data to/from the smart card.

Referring now to Figure 12, module 214 suitably comprises a keypad circuit 1204 associated with keypad 1102 (Figure 11), a magnetic strip reader circuit 1206 associated with magnetic strip reader 1104, a microcontroller 1212, a modem 1202, a smart card reader circuit 1208 associated with ICC slot 1106, and a clock/data box 1218 configured to effect communication between microcontroller 1212 and box 204 via connector 212 as well as microcontroller and keyboard 206 via connector 210. In addition, module 214 suitably comprises a control gate 1222 for selectively establishing communication between module 214 and PC 110.

With continued reference to Figure 12 and further reference to Figure 13, microprocessor 1212 suitably comprises a model MC68HC11E9 microprocessor manufactured by Motorola, Inc. Processor 1212 suitably interfaces with a power circuit 1302 configured to apply 5 volts powered to V_{dd}, and an oscillator circuit 1304 configured to apply a predetermined clock pulse to a clock port 1308, for example at a frequency in the range of 4MHZ to 12 MHZ, and to most preferably 8 MHZ. Processor 1212 further comprises a reset circuit 1306 configured to selectively apply a reset signal to a reset port 1310 of processor 1212.

In addition, processor 1212 is suitably equipped with the following input/output ports which, in the illustrated embodiment, are configured as follows:

Port No.	Function
pa0	card swipe input/output (channel 1)
pal	card swipe input/output (channel 2)
pa2	modem interrupt
pa3	read/write*
pa4	ale
pa5	cs
pa6	output to "system validation" LED
pa7	(smart card) read/write data
pb0	keypad row 1
pb1	keypad row 2
pb2	keypad row 3
pb3	keypad row 4
pb4	buffer enable
pb5	smart card clock
pb6	smart card control
pc0	d0 parallel data interface to modem
pc1	d1 parallel data interface to modem
pc2	d2 parallel data interface to modem
pc3	d3 parallel data interface to modem
pc4	d4 parallel data interface to modem
pc5	d5 parallel data interface to modem
pc6	d6 parallel data interface to modem
pc7	d7 parallel data interface to modem

pd0, pd1	interface to pentec bar code reader data loader
pd2	pc clock
pd3	pc data
pd4	keyboard clock
pd5	keyboard data
pe0	keypad column 1
pe1	keypad column 2
pe2	keypad column 3

Referring now to figures 12-14, keypad 1102 is suitably connected with the various ports associated processor 1212 as set forth in Figure 14.

Refer now to figures 12-13 and 15, control gate 1222 suitably comprises an analog switch, for example a module no. 74HC4066 manufactured by Motorola, Inc. Switch 1222 suitably comprises four internal switches a-d, which are suitably simultaneously controlled by the output of port pb4, such that internal switches a-d are either all open or all closed in accordance with the logic value of the output of port pb4. Generally speaking, in essentially all operational states of module 214, internal switches a-d will remain open, effectively isolating keyboard 206 from box 204. During the transparent mode (discussed below), internal switches a-d will typically remain closed, permitting normal communication between the keyboard and the PC.

With continued reference to Figures 12-13 and 15, the buffer enable signal from port pb4 of processor 1212 is suitably applied to control gate 1222. In additional the keyboard clock and keyboard data signals are transmitted between ports which pd4 and pd5, respectively, of microprocessor 1212 to a databus 1219 extending from switch 1222 to keyboard 206 via connector 210. Similarly, the PC clock and PC data signals are transmitted between ports pd2 and pd3, of microcontroller 1212 to a databus 1218 extending between control gate 1222 and box 204 (Figure 1) via connector 212.

Referring now to figures 12, 13 and 16, a first embodiment of magnetic Stripreader circuit 1206 associated with magnetic strip reader 1104 (Figure 11) suitably comprises a magnetic reader head 1602, for example a 1.6 microhenry inductor coil, respective first and second amplifiers 1604 and 1606, for example model no. LM324a operational amplifiers, respective comparators 1608 and 1610, for example model no. LM393, and an inverting schmidt trigger 1612, for example 74HC14.

More particularly and with continued reference to Figure 16, a transaction card of the type bearing a magnetic strip is Suitably slid through magnetic strip reader 1104 of module 214 (Figure 11) such that the magnetic strip magnetically engages reader head 1602. The output of coil 1602 is suitably applied to the inverting input of amplifier 1606 which suitably exhibits a gain on the order of 20. The output of amplifier 1604 is suitably applied to the noninverting input of amplifier 1606. The output of amplifier 1606 is suitably applied to the noninverting input of comparator 1608 and to the inverting input of comparator 1610. By applying a determined threshold voltage to the inverting input of amplifier 1608, and by, also applying a predetermined threshold voltage to the non-inverting input of amplifier 1610, a series of logic hi and logic low pulses are applied to the input of

schmidt trigger 1612, which inputs are effectively rectified, squared and sharpened into a binary square wave by the schmidt trigger/comparator combination. The output of schmidt trigger 1612 is a function of the output of coil 1602 and corresponds to the data which is magnetically and encoded into the magnetic strip which is drawn through magnetic card reader 1104. The output of schmidt trigger 1612 correspond to the channel 1 swipe data applied to port pa0 of processor 1212.

The magnetic head reader circuit of Figure 16 is particularly useful in the context of cards bearing magnetic strips which comprise a signal "track", or single column of magnetically encoded Information. Alternatively, many magnetic strips of the type typically found on transaction cards comprise two or more separate magnetic columns embedded within the magnetic strip. In such cases, it may be desirable to employ dual magnetic reader coils in the context of card reader slot 1104.

More particularly and referring now to Figure 17, an alternate embodiment of circuit 1206 suitably comprises respective first and second reader coils 1603a and 1603b which are suitably configured to read the corresponding first and second magnetic rails (not shown) comprising the dual rail magnetic strip associated with a transaction card. The alternative embodiment shown in Figure 17, the circuit essentially comprises two of the circuits shown in Figure 16 configured to generate respective outputs 1702 and 1704 which are suitably applied to respective ports pa0 and pa1 of processor 1212.

Referring now, to figures 18-20 and with momentary reference to Figure 12, microcontroller 1212 suitably comprises a random access memory (RAM) 1802, a read only memory (ROM) 1902 and an erasable electronically programmable read only memory (EEPROM) 2002.

More particularly, RAM 1802 suitably comprises inter alia, respective memory sectors 1804-1836 corresponding to various addresses in RAM 1802. As discussed below in conjunction with the operational states of module 214, various predetermined data are suitably stored and retrieved in data sectors 1804-1836 during operation of module 214.

With continued reference to Figure 19, the operating code (operational program) which controls the operation of module 214 is suitably stored in a first sector 1904 in ROM 1902. Moreover, various interrupt sectors, useful in the operation of module 214 are suitably stored in a second sector 1906 within ROM 1902.

Referring now to Figure 20, EEPROM memory map 2002 suitably comprises non-volatile memory for use in storing encryption keys associated with the encryption algorithm employed in the context of the present invention to encrypt confidential data. More particularly, EEPROM 2002 suitably comprises a first sector 2004 corresponding to future encryption keys, a second sector 2006 corresponding to the serial number of the initial encryption key and a third sector 2008 corresponding to an encryption counter. In accordance with one aspect of the present invention, any suitable encryption algorithm may be employed by module 214, module 300, or PC110 in the context of the

present invention which provides adequate security against unauthorized detection of the underlying confidential data.

Referring now to figures 21-38, the operation of system 100, and particularly the operational states of module 214, will now be described.

With particular reference to Figure 21, upon powering up of module 214, a reset signal is applied to reset port 1310 of processor 1212 (Step 2102).

Upon entering the reset condition, system initialization is executed (Step 2104).

More particularly and with momentary reference to Figure 22, system initialization Step 2104 suitably entails various initialization Steps (2104b), Including, inter alia:

1. Initializing the current mode to transparent mode, for example by setting current mode, register 1804 (see Figure 18) to the transparent mode condition, as discussed in greater detail below;
2. Initializing previous mode register 1806 to "no mode";
3. Initializing the system Interrupts to appropriate trigger characteristics;
4. Enabling interrupts from the PC interface bus (e.g. connector 212); and
5. Initializing the PC interface temporary buffer 1808 to "empty". The relevancy of the foregoing initialization steps are discussed in greater detail below in conjunction with ensuing description of the operation of module 214.

Upon completing system initialization, the system enters a system redirect state (Step 2106), whereupon the system then enters the appropriate operational mode; in the context of system startup, the system will default to transparent mode, as set forth above in conjunction with system initialization Step 2104(b).

More particularly, a preferred embodiment of the present invention employs an interrupt-based processing scheme within module 214. Thus, as the system flows through the main operational loop set forth in Figure 21, the system will from time to time receive interrupts from PC 110. Upon receipt of a "mode change" interrupt command from PC 110, processor 1212 causes Module 214 to terminate the then current mode, and enter system redirect (Step 2106), from which the appropriate new operational mode may be entered.

From the main control loop governing the operation of module 214 shown in Figure 21, the system may enter any one of a number of operational states as a result of a number of predicate instructions. More particularly, the system may enter certain operational states as controlled by the executable code resident within sector 1904 of ROM 1902. In addition, the system may enter certain operational states as a result of commands received from PC 110, as set forth in more detail in conjunction with Figure 23.

Referring now to Figure 23, PC 110 from time to time sends interrupt commands to module 214 via connector 212 (Step 2302).

Upon receipt of a PC interrupt, the interrupt data packet received from PC 110 is suitably stored in sector 1808 of RAM 1802 (Step 2304). The system then determines if the complete message (interrupt data packet) was received from PC 110; if not, the system returns to main loop 2100. If a complete message is received at module 214, the system determines if the data corresponds to a command instruction or whether the message corresponds to other than a command instruction (Step 2308).

If the message corresponds to data other than a command Instruction, the message is suitably stored in data output buffer 1810 of RAM 1802 (Step 2310), for subsequent processing, e.g., modem transmission to host computer 102. Thereafter, the contents of PC interface temporary buffer 1808 are reset to empty (Step 2320), then the system again returns to its pre-interrupt state (Step 2322).

Returning now to Step 2308 of Figure 23, if the data received is a command instruction, the system determines if the command instruction corresponds to a mode change (Step 2312). If not, the data is stored in command register 1812 of RAM 1802 for possible subsequent use within the then current mode (Step 2316); the system then proceeds to Step 2320, as described above. If the message received from PC 110 corresponds to a mode change command ("Yes" branch from Step 2312), the then current mode is written into previous mode register 1806 (Step 2314), and the newly received mode is written into current mode register 1804 of RAM 1802 (Step 2318). The system then proceeds to Step 2320, as described above.

With continued reference to Figure 21, upon receipt of a message from PC 110, processor 1212 interrogates current mode register 1804 and, in accordance with the contents of register 1804, answers the appropriate operational mode from main loop 2100. In the context of startup operation, the system is suitably configured to enter transparent mode (Step 2110).

Referring now to Figure 24, transparent mode 2110, just as with various other operational modes described below, determines whether a subsequent mode change has been received since entering transparent mode 2110 (Step 2402). If a mode change is received, the system enters the system redirect state (Step 2106); (see also Figure 21) and enters the newly selected mode. If a mode change has not occurred, processor 2112 interrogates previous made register 1806 to determine if the previous mode corresponds to transparent mode (Step 2404). If the previous mode corresponds to transparent mode, the system proceeds to Step 2410. If the previous mode was not transparent mode, the system commands the keyboard to clear its internal buffers and to set previous mode register 1806 to transparent (Step 2408). More particularly, if the previous mode was not transparent mode, it is, possible that spurious keystrokes may have been entered into keyboard 206, which keyboard data may be stored in buffers internal to keyboard 206 and not shown in Figure 2. In order to prevent data corresponding to these spurious keystrokes from being transmitted to PC 110, the keyboard internal buffers are cleared (Step 2408). Thereafter, the system enables the interface between keyboard 206 and PC 110 (Step 2410).

More particularly, and with reference to figures 12, 13, and 15, Step 2410 of Figure 24 suitably entails processor 1212 generating a buffer enable signal at port PB4, and transmitting the buffer enable signal to control gate (switch) 1222. In response, internal switches A-D of switch 1222 are closed, establishing direct communication between PC 110 and keyboard 206 through connector 212, BUS 1218, switch 1222, BUS 1219, and connector 210. Thereafter, the system continues to cycle through transparent mode 2110, permitting normal operation of keyboard 206 with respect to PC 110. The system will continue to cycle through transparent mode 2110 until a subsequent message is received from PC 110.

Returning now to Figure 21, the system way also receive a command to enter scan mode (Step 2112), for example in response to a scan mode request from PC 110 (see Step 806, Figure 8), whereupon processor 1212 causes module 214 to enter the scan mode of operation (Step 2114).

More particularly and referring now to Figure 25 (scan mode 2114) generally involves "scanning" the circuitry associated with keypad 1102 (Figure 14) to detect data (e.g. PIN) entered into keypad 1102 by the user.

With continued reference to Figure 25, scan mode operation Involves, inter alia, initializing PIN entry buffer 1814 of RAM 1802 to empty (Step 2502), to prepare the PIN buffer to receive data which is about to be entered onto keypad 1102 by the user.

The system detects whether a subsequent mode change command has been received (Step 2504); if so, the system returns to system redirect Step 2104. If no mode change has occurred, module 214 waits until a keypress is detected (Step 2506) or, alternatively, until a mode change is detected (Step 2504).

More particularly, processor 1212 scans ports PB0-PB3 and ports PE0-PE2 (See Figure 13) corresponding to rows 1-4 and columns 1-3 of keypad 1102, respectively (See Figure 14). When a keypress is detected, the system determines if the depressed key corresponds to one of the numbers 0-9 (Step 2508); if so, module 214 suitably sends a signal to PC 110 to cause a "dummy" indicia of the depressed key to screen 202 (Figure 2).

More particularly, the operational program stored in sector 1904 of ROM 1902 (Figure 19) of processor 1212 suitably includes operating code which permits module 214 to communicate with PC 110 in a manner which emulates the manner in which conventional keyboards (e.g. keyboard 206) typically communicate with box 204. In a preferred embodiment of the present invention, the operating code governing the operation of module 214 is suitably configured in accordance with any suitable protocol, for example the protocol employed by IBM in its PCs or any other suitable derivative or variant thereof, to thereby permit module 214 to communicate with box 204 in a manner which emulates conventional communication between keyboard 206 and box 204, data transmission and other communication between module 214 and box 204 may be conveniently and efficiently carried out in a manner which is essentially transparent to box 204; that is, when box 204 receives data

and/or information from module 214, box 204 interprets the data just as though box 204 had received it from keyboard 206. Similarly, when box 204 transmits data and/or information which is received by module 214, box 204 configures the data/information packages in the same manner in which box 204 would normally configure the data for receipt by keyboard 206. By leveraging presently known data transmission protocols in this manner, module 214 may be conveniently interposed In series between the keyboard and the keyboard port on the PC of essentially all PC's which comport with industry recognized protocol schemes.

With continued reference to Figure 25, if a keypress corresponds to a 0 through 9, the system waits until the key is released (Step 2518) before capturing the data. In this way, the system desirably avoids capturing repetitive data which may often be generated by many keypads which are specifically configured to continuously generate repetitive keystroke data when a particular key is held down by the user.

Return now to Step 2508, if the keypress was not a 0 through 9, the system determines if the keypress corresponds to an "Enter" (Step 2512); if so, a message corresponding to an "Enter" command is transmitted from module 214 to PC 110 (Step 2514), indicating that entry of the confidential data (e.g. PIN) is complete. If, on the other hand, the keypress does not correspond to an "Enter", the system determines the identity of the keypress. In the context of the illustrated embodiment, If the keypress does not correspond to a 0 through 9, and further does not correspond to an "Enter", the system concludes that the keypress corresponds to a "Cancel" (Step 2516). Thus, module 214 transmits a message to PC 110 Indicating that entry of the confidential data has been canceled by the user.

Upon release of the depressed key by the user (Step 2518), the system determines if the keypress corresponds to a 0 through 9 (Step 2520); if so, the particular numeric keypress is suitably stored in PIN entry buffer 1814 of RAM 1802 (Step 2524), and the system returns to Step 2504 to await the next keypress.

If the keypress corresponds to a "Cancel" (Step 2522), the systems restores PIN entry buffer 1814 to empty (Step 2528) and returns to Step 2504 to await either a mode change or a subsequent keypress.

If the keypress corresponds to an "Enter" (Yes branch of Step 2522), module 214 suitably encrypts the data stored in PIN enter buffer 1814 (Step 2526), as discussed in greater detail below in conjunction with Figure 26.

Although the illustrated embodiment is described in the context of numeric (i.e., "0" through "9") PIN data, it will be appreciated that the confidential data entered into module 214 may be of any suitable form, e.g., numeric, alpha, alphanumeric, ASCII, binary, or any other suitable modality.

Referring now to Figure 26, the encryption operation 2526 suitably proceeds as follows. Once the confidential data (e.g., PIN) is entered onto keypad 1102 by the user, processor 1212 retrieves the data from personal account number register 1818 of RAM 1802 and the PIN from buffer 1814 (Step

2602). These data, alone or in conjunction with other data, are suitably combined and encrypted in any suitable matter (Step 2602). In a preferred embodiment, these data may be suitably combined in accordance with ANSI specification X9.24-1992. The data is suitably encrypted in accordance with ANSI standard X3.92-1981 or any other desired encryption technique. More particularly, the foregoing combination and encryption algorithms are desirably resident in operational program sector 1904 of ROM 1902, and operate in conjunction with encryption key information suitably stored in EEPROM 2002 (See figures 19 and 20). By storing the encryption key data in nonvolatile memory (i.e., EEPROM), system integrity and security is enhanced.

With continued reference to Figure 26, upon encrypting the data in accordance with Step 2602, the encrypted data is suitably written into the next successive location in encrypted PIN sector 1816 of RAM 1802 (Step 2604). Thereafter, the address corresponding to the location in sector 1816 wherein the encrypted data is written is transmitted to PC 110 (Step 2606). More particularly, and with momentary reference to Figure 2, once the data is encrypted within module 214, the location of the encrypted data is transmitted to PC 110 via connector 212, such that unencrypted confidential data need not be transmitted from module 214 to PC 110 in order to effect a transaction.

After encrypting the data, processor 1212 suitably creates a new unique key for use in a subsequent encryption process and stores the new key in future encryption key sector 2004 of EEPROM 2002 (Step 2608). In accordance with one aspect of the present invention, the new encryption key may be generated in accordance with any suitable scheme which is compatible with the encryption algorithm executed in Step 2602. In accordance with a preferred embodiment, a new unique encryption key may be generated in accordance with ANSI X9.24-1992.

Upon transmitting indicia of the encrypted data from module 214 to PC 110, PC 110 continues to execute the application program residence therein, as described above in detail in connection with figures 4-10.

Returning now to the main control loop 2100 of module 214 (Figure 21), module 214 may also elect to enter card swipe mode 2118 (Step 2116). More particularly, and with momentary reference to Figure 7, PC 110 may request Module 214 to enter the card swipe operational mode, for example at a point during the execution of the application software resident in PC 110 where such application software prompts the user to swipe his transaction card through card swipe slot 1104 of module 214 (Figure 11), for example as discussed above in connection with Step 716.

Referring now to Figure 27, upon entering the swipe operational mode, processor 212 suitably initializes (clears) respective swipe data input buffers 1820, 1822 of RAM 1802 (Step 2702). The system then looks for a mode change (Step 2704), and returns to system redirect state 2106 if a mode change is detected. Otherwise, the system sets a swipe timeout counter to a predetermined maxtime during which the transaction must engage the card reader (Step 2706). In a preferred embodiment, the

predetermined value of this nextime on the order 15 seconds is suitably stored in swipe time-out register 1824, of RAM 1802.

The time-out counter is successively decremented (Step 2708) until the software timer resident in sector 1824 reaches zero (Step 2710), whereupon the data then resident in buffers 1820, 1822 are transmitted to PC 110 (Step 2714). Alternatively, rather than waiting until the maxtime counter counts down to zero, the "swiped" data may be transmitted to PC 110 when processor 1212 determines that respective input buffers 1820, 1822 are full (Step 2712).

Upon the first to occur of the timing out of these swipe timeout timer (Step 2710) or a detection that the swipe input buffers are full (Step 2712), the data within card swipe buffers 1820, 1822 are transmitted to PC 110 (Step 2714).

With momentary reference to figures 12 and 16-17, recall that magnetic 15 strip reader circuit 1206 "reads" the data from the magnetic strip on a transaction card through magnetic head reader 1602 (or magnetic head readers 1603 (a), 1603 (b) in Figure 17) whereupon reader (circuit 1206 applies an output signal (corresponding to one or both of "ch 1 swipe" and "ch 2 swipe") to ports pa0 and pa1 of processor 1212, respectively, as discussed in detail above.

More particularly and with reference to figures 16 and 28, as a transaction card bearing a magnetic strip is drawn through card reader slot 1104 (see Figure 11), magnetic reader head 1602 outputs alternating high and low voltage levels corresponding to the data encoded on the magnetic strip. Upon the detection of a first output level from schmidt trigger 1612, for example a logic high value, a hardware timer (not shown) resident in processor 1212 is stopped, and the time at which this timer is stopped is suitably saved in swipe timer * register 1826 of ram 1802 (see Figure 18) (Step 2802). The card swipe timer is again reset to zero and restarted, awaiting the detection of a next predetermined voltage level from schmidt trigger 1612 (Step 2802).

In conjunction with the timer data retrieved in Step 2802, processor 1212 determines if the output of schmidt trigger 1612 corresponds to a predetermined logic state (e.g. a zero or a one) (Step 2804). This logic data may then be stored in successive bit locations in the appropriate swipe input buffer (e.g., buffer 1820, 1822) (Step 2804). The system them determines if the swipe input buffer(s) is full (Step 2806). If the swipe input buffer is full, a buffer full flag is suitably set in swipe buffer full flag register 1828 of ram 1802 (Figure 18) (Step 2808), which permits processor 1212 to determine when the swipe input buffer(s) is full (see Step 2712, Figure 27).

Returning now to Step 2806 of Figure 28, if the swipe input buffer(s), is not full, the aforementioned software timer is reset to a maximum bit interval value (Step 2810), and the process returns (Step 2812) to the point at which it left the process set forth in Figure 27, whereupon the process of Figure 28 is repeated on a bit-by-bit interrupt basis until all the appropriate data is "read" from the magnetic strip on the transaction card. Note, however, that the entire process of accumulating the card swipe data described in conjunction with Figure occurs in a very short period

of time, for example ten milliseconds to one second, as a card is drawn through card reader slot 1104 (Figure 11).

Returning now to Figure 21, module 214 is also configured to enter print mode 2122 from main loop 2100 (Step 2120) for example upon a request to do so from PC 110 (see Step 816, Figure 8).

Referring now to Figure 29, print operation mode 2122 suitably entails initializing the printer (Step 2902), for example to establish various hardware and software parameters associated with the printing process. In this regard, and as briefly discussed above, the printer may be affiliated with PC 110, for example by connecting a printer directly to box 204, or by connecting the printer to PC 110 via a suitable networking configuration. Alternatively, the printer may interface directly with the encryption module, for example at connector 310 of module 300 (Figure 3 or, alternatively, at peripheral device module 1200 of module 214 as shown in Figure 12.

With continued reference to Figure 29, the system determines if a mode change has occurred (Step 2904) and, if so, returns to system redirect Step 2906.

The system then determines if the data to be printed is currently available, for example by interrogating data output buffer 1810 (Figure 18) (Step 2908). If the data is not available, the system returns to Step 2902 to await the data to be printed. If the data is available ("yes" branch of Step 2908), the system determines if the printer is ready (Step 2930). In this regard, the printer to be checked will likely be connected to module 214, inasmuch as it would not typically be necessary to execute print operation 2122 if the printer were connected to PC 110. Stated another way, if PC 110 is equipped with a printer, the print operation may be controlled directly by PC 110, while the print operation as set forth in Figure 29 is appropriately controlled by module 214 if the printer employed in the context of the present invention is interfaced with module 214.

With continued reference to Figure 29, if the printer is not ready, module 214 suitably sends a command to the PC indicating that the printer associated with module 214 is not ready. In this regard, PC 110 may prompt the user to correct the printer situation, for example as described above in conjunction with Figure 7.

If the printer associated with module 214 is ready, the data resident in data output buffer 1810 is transmitted to the printer, for example via serial bus 1211 (see Figure 12). In accordance with the preferred embodiment, the data to be printed is transmitted to the printer in serial fashion; hence, the process set forth in Figure 29 is desirably repeated until the data present in data output buffer 1810 is sequentially transmitted to the printer.

Returning now to main loop 2100 (Figure 21) and with reference to Figure 30, module 214 is suitably configured to enter modem mode 2126 (Step 2124), for example in response to a request to do so from,PC 110 (see Step 710, Figure 7).

As briefly discussed above, the present invention may be configured to transmit data and information from PC 110 to host computer 102 in any convenient manner, for example via a modem associated with PC 110 or, alternatively, modem 1202 associated with module 214 (or modem connector 308 associated with module 300; Figure 3). If data is transmitted from PC 110 via a modem associated with PC 110, it would not generally be necessary for module 214 to execute modem operation 2126; rather, the modem operation may be effectively carried out by PC 110. If, on the other hand, modem operation is to be effected through a modem interfaced with module 214, it may be particularly, advantageous for processor 1212 to control the modem operation.

With continued reference to Figure 30, modem operation 2126 suitably (entails an initialization of modem 1202 (Step 3002). Module 214 then determines if a mode change has occurred (Step 3004) and, if so, the system returns to system redirect 2106. If a mode change has not occurred, the system determines if data output buffer 1810 contains the data to be transmitted via modem (Step 3006). If the data is not resident in buffer 1810, the system returns to Step 3004 and continues cycling between Steps 3004 and 3006 until the data is written into buffer 1810 or until a mode change occurs.

When data output buffer 1810 contains the appropriate data to be transmitted via modem, processor 1212 retrieves the data from output 1810 and transmits the data via modem to host computer 102 (Step 3008). When it is desired for module 214 to receive data via modem, for example from host computer 102, processor 1212 may be suitably configured to retrieve the data from modem 1202, for example at modem interrupt port pa2.

Referring now to Figure 31, PC 110 suitably transmits a request to module 214 to transmit data via the modem connected to module 214. More particularly, a modem interrupt message is applied to port PA2 of module 1212 by modem 1202. Module 214 then determines if the message corresponds to a "data received" interrupt (Step 3102) or a modem transmit interrupt (Step 3104). If a data received interrupt occurs ("Yes" branch of Step 3102), indicating that data has been received at modem 1202, the data received at modem 1202 is retrieved by processor 1212 and transmitted to the PC via connector 212 (Step 3106).

If the modem interrupt message corresponds to a modem transmit request (Step 3104), processor 1212 retrieves the data to be transmitted from buffer 1810 and applies the data, for example on a byte-by-byte basis, to modem 1202 (Step 3108).

If the modem interrupt corresponds to neither a data received or a data transmit message, an error message is suitably sent to the PC (Step 3110).

After data which is received at modem 1202 is retrieved and sent to PC 110 (Step 3106), And after data is sent by processor 1212 from buffer 1810 to modem 1202 (Step 3108), the system returns (Step 3112) to the low level process of Figure 30, and the process is repeated for each successive interrupt generated by modem 1202.

Referring now to figures 21 and 32, module 214 may be suitably configured to enter bar code operational mode 2130 (Step 2128), for example in response to a request to do so from PC 110. Bar code operation 2130 suitably entails determining whether a mode change has occurred (Step 3302) and, if so, returning to system redirect Step 2106. If a mode change has not occurred, data may be input from a general purpose module 1210, for example a bar code reader (Step 3204). Once the bar code or other data is received by module 214, it may be appropriately transmitted to PC 110, as desired (Step 3206).

Referring now to figures 21 and 33, module 214 may be suitably, configured to execute a smart card operation 2134 (Step 2132), for example in response to a request from PC 110 to do so. In this regard, although many of the various functional features associated with module 214 (e.g. modem operation 2126, print operation 2122, swipe operation 2118, and the like) are initiated in response to a request from PC 110 in accordance with the embodiment described herein, it will be appreciated that the various operational states of module 214 may suitably be effected in any desired manner, for example by entering appropriate commands directly into module 214.

With continued referenced to Figure 33, smart card mode 2134 suitably details determining whether a mode change has occurred (Step 3302) and, if so, returning to system redirect Step 2106.

If no mode change has occurred, the system determines if data is to be read from a smart card (Step 3304). In this regard, and as briefly stated above, such a request may come from PC 110, or may be otherwise effected by the user, for example by entering a particular code or depressing other buttons (not shown) onto keypad 1102 (Figure 11).

If data is to be read from a smart card ("Yes" branch of Step 3304), data is retrieved by processor 1212, for example via smart card, reader 1208 (Figure 512). Upon retrieving the data from the smart card, the data may be transmitted to PC 110 (Step 3306).

As discussed above, module 214 may also be configured to write data onto a smart card. In this case, the appropriate data to be written into the smart card may be suitably retrieved from data output buffer 1810 and applied to smart card circuit 1208 (Steps 3308, 3310).

Referring now to figures 21 and 34, module 214 in the PC application software discussed above in conjunction with figures 410 may be suitably configured such that the application software resident in PC10 must first validate module 214 before permitting the transmission of encrypted data or otherwise performing functions described herein. More particularly, in view of the importance of maintaining security in the context of real time funds transfer authorization, it may be desirable to permit PC 110 (e.g., through software) to confirm that module 214 embodies satisfactory security features before effecting transactions.

With continued reference to figures 21 and 34, module 214 may be suitably configured to enter a system validation mode 2138 (Step 2136), for example in response to a request from the user or from PC 110 to do so. System validation mode 2138 entails, inter alia, a determination of whether a mode

change has occurred (Step 3402) and, if so, the system may be configured to return to system redirect Step 2106.

Module 214 may then be configured to receive and/or retrieve validation data from PC 110, which validation data either confirms that the application software running on PC 110 is compatible with module 214; alternatively, the validation data may permit module 214 to run a self-check to determine if adequate security mechanisms are in place. Module 214 may then confirm that it is compatible with the software resident on PC 110 (Step 3406). If the system determines that either module 214 or the application program running on PC 110 are not "valid" according to predetermined validation criteria, module 214 may be configured to either disable itself or to disable the software running on PC 110 Step 3408).

Referring now to figures 21 and 35, module 214 may suitably be configured to execute a bit operation 2142 (Step 2140), for example in response to a request from PC 110 or the user to do so.

Bit operation 2142 suitably determines if a mode change has occurred (Step 3502) and, if so, return the system to system redirect Step 2106. If a mode change has not occurred, module 214 may execute any number of built-in tests (bits) (Step 3504), for example testing various data transmission and retrieval processes, testing the presence and/or functionality of various peripheral devices, or executing the various wraparound and/or auditing facilities set forth in Figure 1.

From time to time during the operation of PC 110, It may be desirable to transmit encrypted data from module 214 to PC 110. With continued reference to Figure 21 and referring also to Figure 36, module 214 may thus be configures to selectively enter retrieval mode 2146 (Step 2144), for example in response to a request to do so from the user or from PC 110.

Retrieval operation 2146 suitably entails, inter alia, determining whether a mode change has occurred (Step 3602) and, if so, returning the system to system redirect Step 2106. If a mode change has not occurred, indicating that the system remains in retrieve mode, module 214 waits for a request from PC 110 for the encrypted data, which request may include the address in sector 1816 of RAM 1802 (Figure 18) where the desired encrypted data is stored (Step 3604). Upon receipt of a request from PC 110 to transmit encrypted data, module 214 retrieves the encrypted data from an appropriate location in memory (e.g., encrypted PIN holding area 1816), and sends the encrypted data to PC 110 (Step 3606). Upon doing so, processor 1212 may suitably reset encrypted PIN holding area 1816 back to empty.

Although the subject application has been described herein with reference to the appended drawing figures, it will be appreciated that the scope of the invention is not so limited. Various modification in the design and implementation of various components and method steps discussed herein may be made without departing from the spirit and scope of the invention, as set forth in the appended claims.

CLAIMS:

1. A remote processing system, located at a first site, for interfacing with a host computer system located at a second site which is remote from said first site, the host computer system being of the type which includes a host modem and which is configured to facilitate financial transactions upon receipt from said remote processing system of a data packet including an encrypted data field, said remote processing system comprising:

a. PC, comprising:

(1) a first memory sector configured to store an interactive software program;

(2) a first processor configured to execute said software program;

(3) an input port configured to communicate with said first processor and

(4) a second modem configured to transmit said data packet from said PC to the host modem in accordance with said software program; and

b. an encryption module, comprising:

(1) a keypad;

(2) a second processor configured to encrypt data entered onto said keypad; and

(3) a data link configured to maintain communication between said encryption module and said PC input port.

2. The remote processing system of Claim 3, wherein said input port comprises a keyboard input port.

3. The remote processing system of Claim 3, wherein said input port comprises a mouse port.

4. The remote processing system of Claim 4, wherein said PC further comprises a keyboard, and said encryption module is connected in series between said keyboard and said keyboard input port.

5. The remote processing system of Claim 4, wherein said second processor is configured to transmit said encrypted data to said input port in a manner which emulates the transmission of keyboard input data.

6. The remote processing system of Claim 3, wherein said data entered onto said keypad corresponds to a PIN.

7. The remote processing system of Claim 3, wherein said PC further comprises a screen, and said first processor is configured to generate a data entry prompt on said screen in accordance with said software program.

8. The remote processing system of Claim 3, wherein said encryption module further comprises a peripheral device useful in electronically entering data into said encryption module.

9. The remote processing system of Claim 10, wherein said peripheral device comprises a magnetic head card reader.

10. The remote processing system of Claim 10, wherein said peripheral device comprises an integrated circuit card reader.

11. The remote processing system of Claim 10, wherein said peripheral device comprises a bar code reader.

12. The remote processing system of Claim 10, wherein said peripheral device comprises a voice recognition device.

13. The remote processing system of Claim 10, wherein said peripheral device comprises a scanner.

14. A data encryption module configured for connection to a PC, the PC being of the type which includes a keyboard, a keyboard input port, and a connector having a first end connected to said keyboard and a second end configured for connection to said keyboard input port, said module comprising:

a. a keypad;

b. a processor adapted to encrypt data entered onto said keypad;

c. an interface connector extending from said module for receipt within said keyboard input port; and

d. an interface port configured to receive said second end of said connector.

15. The encryption module of Claim 16, further comprising an input data transducer for entering data into said module other than through said keypad.

16. The module of Claim 17, wherein said transducer comprises at least one of a magnetic head card reader an integrated circuit card reader, a bar code reader, a voice recognition device, and a scanner.

17. The module of Claim 16, further comprising a housing within which said processor is disposed, and wherein said keypad is disposed substantially integral with a surface of said housing.

18. A remote processing system for interfacing with a host computer system including a host modem, the host computer system being configured to facilitate financial transactions upon receipt from said remote processing system of a data packet including an encrypted data field, said remote processing system comprising:

a. a PC, comprising:

(1) a PC housing;

(2) a first processor, disposed within said PC housing, configured to execute a software program;

(3) an input port accessible from outside of said PC housing and configured to communicate with said first processor; and

(4) a PC modem configured to transmit said data packet from said PC to the host modem in accordance with said software program; and

b. an encryption module, comprising:

(1) a module housing;

(2) a keypad accessible from outside of said module housing;

(3) a second processor disposed within said module housing and configured to encrypt data entered onto said keypad; and

(4) a data link configured to maintain communication between said encryption module and said PC input port.

19. The remote processing system of Claim 20, wherein:

a. said input port comprises a keyboard input port;

b. said PC further comprises a keyboard, and said encryption module is connected in series between said keyboard and said keyboard input port; and

c. said second processor is configured to transmit said encrypted data to said input port in a manner which emulates the transmission of keyboard input data.

20. A data encryption terminal of the type comprising a single, unitary housing, a keypad circuit disposed within said housing and connected to a keypad which is accessible from outside of said housing, processing circuitry configured to execute a software application program and to encrypt data entered on said keypad, and a modem for transmitting said encrypted data from said terminal, the improvement comprising:

a. a first housing, within which is disposed said modem and a first processor for executing said software application program; and

b. a second housing, separate from said first housing, within which is disposed a said keypad circuit and a second processor configured to encrypt data entered on said keypad.

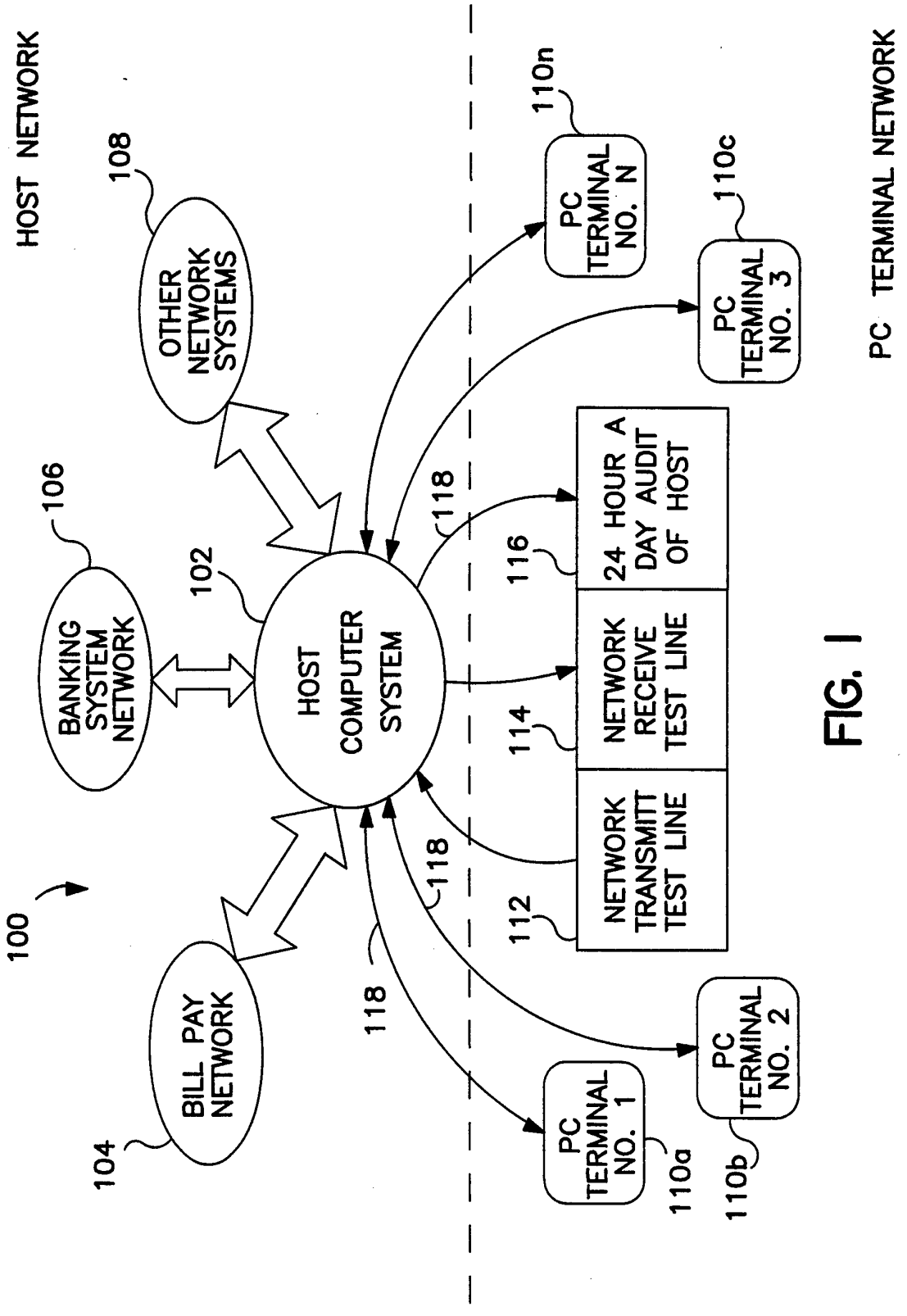
HOST NETWORK
PC TERMINAL NETWORK
100
102
HOST COMPUTER SYSTEM
104
BILL PAY NETWORK
106
BANKING SYSTEM NETWORK
108
OTHER NETWORK SYSTEMS
110a
PC TERMINAL NO. 1
110b
PC TERMINAL NO. 2
110c
PC TERMINAL NO. 3
110n
PC TERMINAL NO. N
112
NETWORK TRANSMITT TEST LINE
114
NETWORK RECEIVE TEST LINE
116
24 HOUR A DAY AUDIT OF HOST
118
118
118

FIG. 1

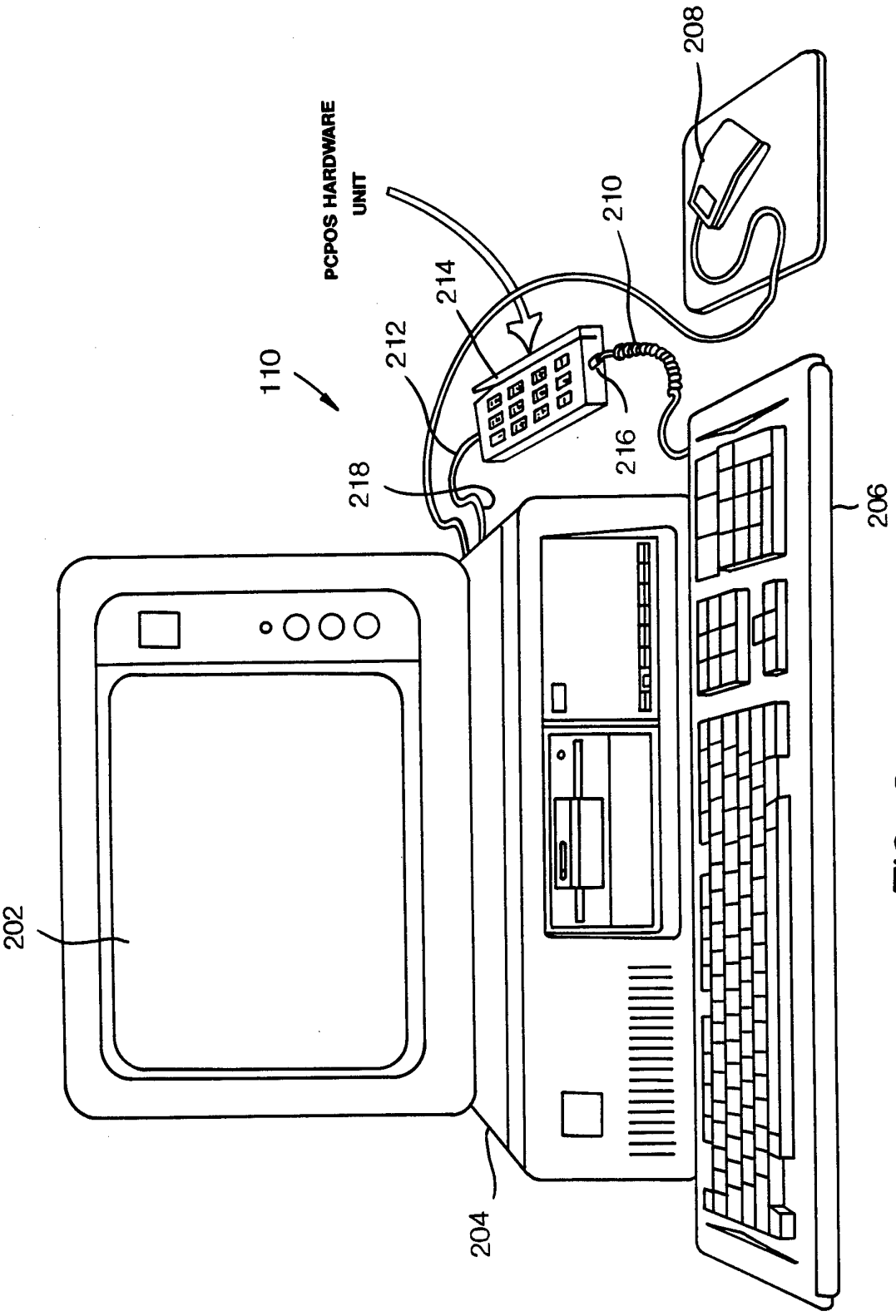

FIG. 2

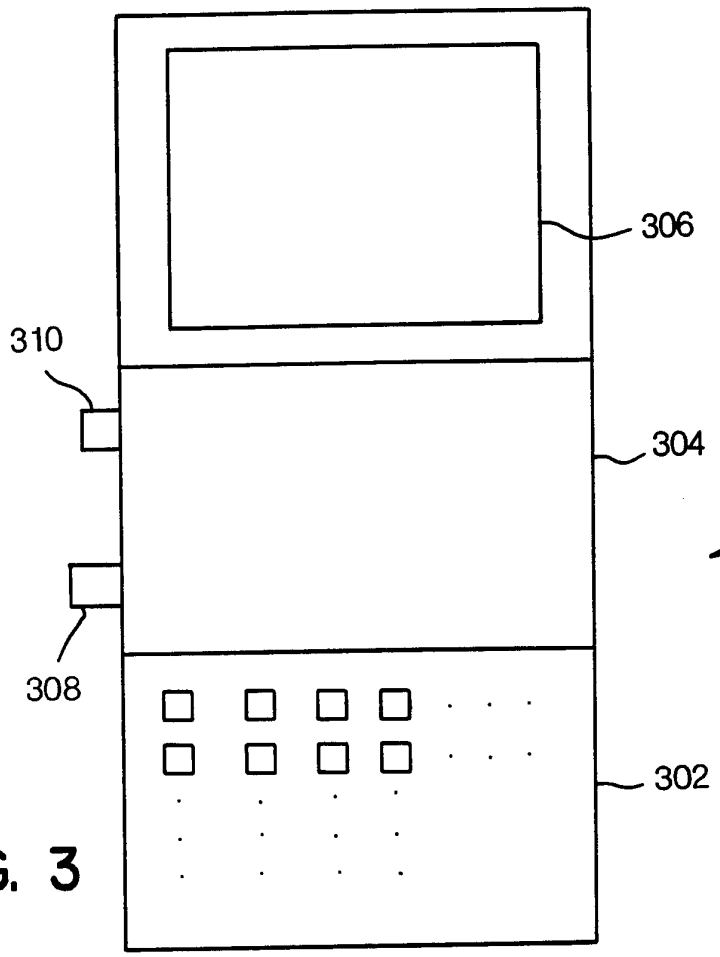
306
310
304
300
308
302

FIG. 3

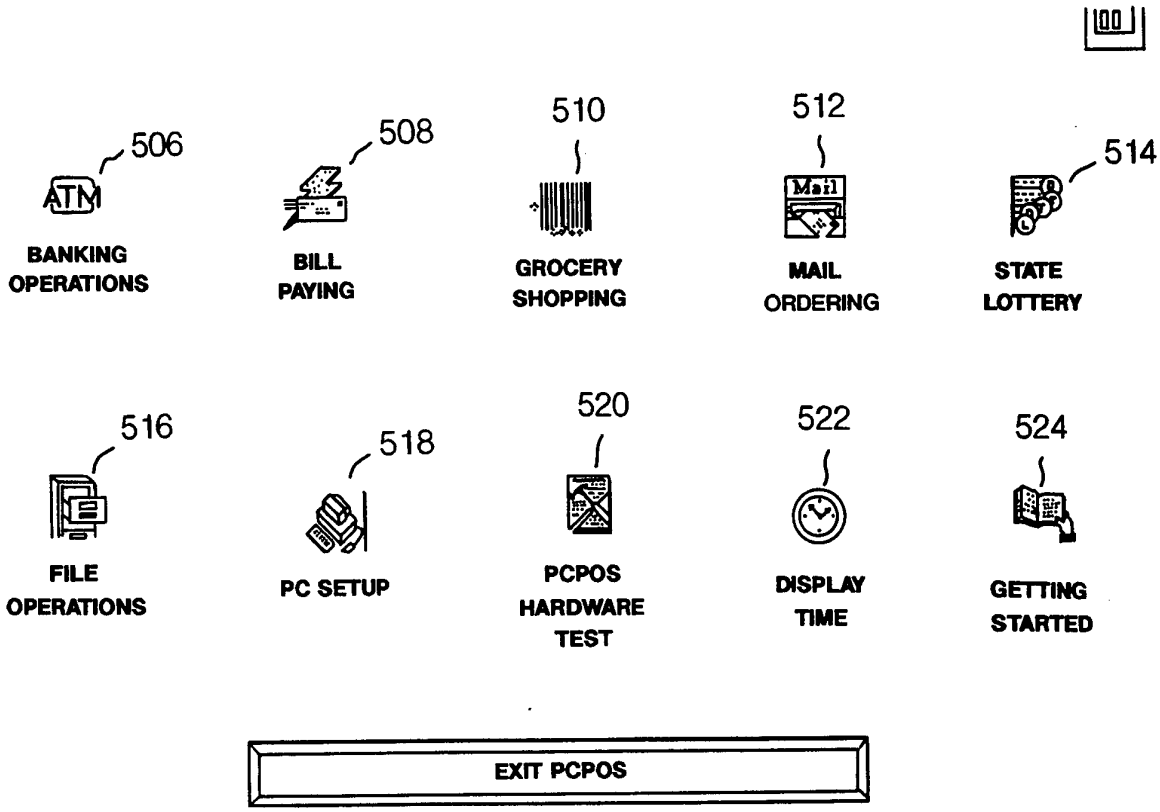
506
ATM
BANKING OPERATIONS
508
BILL PAYING
510
GROCERY SHOPPING
512
Mail
MAIL ORDERING
514
STATE LOTTERY
516
FILE OPERATIONS
518
PC SETUP
520
PCPOS HARDWARE TEST
522
DISPLAY TIME
524
GETTING STARTED
EXIT PCPOS

FIG. 5

FIG. 4

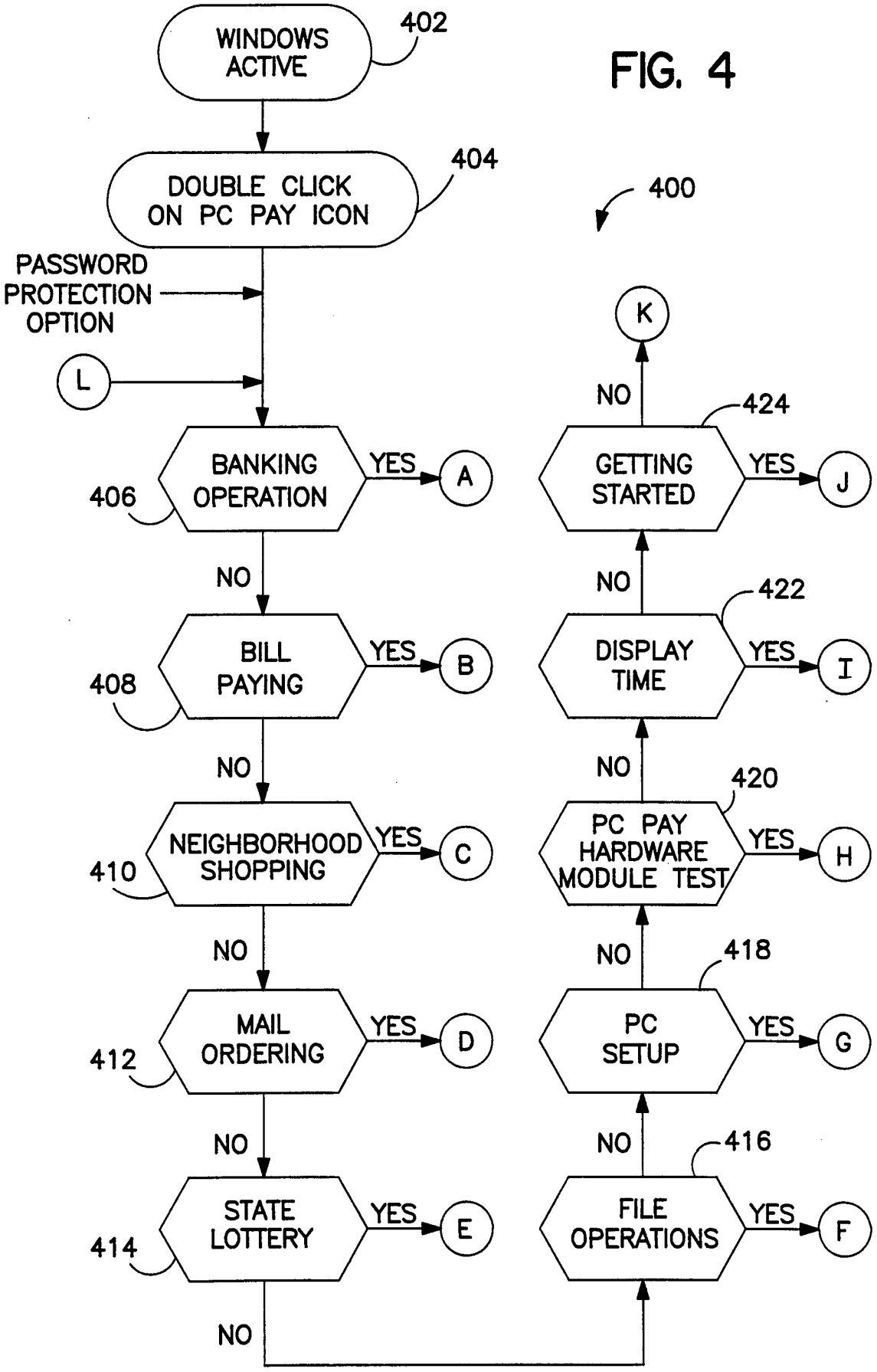
WINDOWS ACTIVE
402
DOUBLE CLICK ON PC PAY ICON
404
400
PASSWORD PROTECTION OPTION
L
BANKING OPERATION
406
YES
A
NO
BILL PAYING
408
YES
B
NO
NEIGHBORHOOD SHOPPING
410
YES
C
NO
MAIL ORDERING
412
YES
D
NO
STATE LOTTERY
414
YES
E
NO
K
NO
GETTING STARTED
424
YES
J
NO
DISPLAY TIME
422
YES
I
NO
PC PAY HARDWARE MODULE TEST
420
YES
H
NO
PC SETUP
418
YES
G
NO
FILE OPERATIONS
416
YES
F

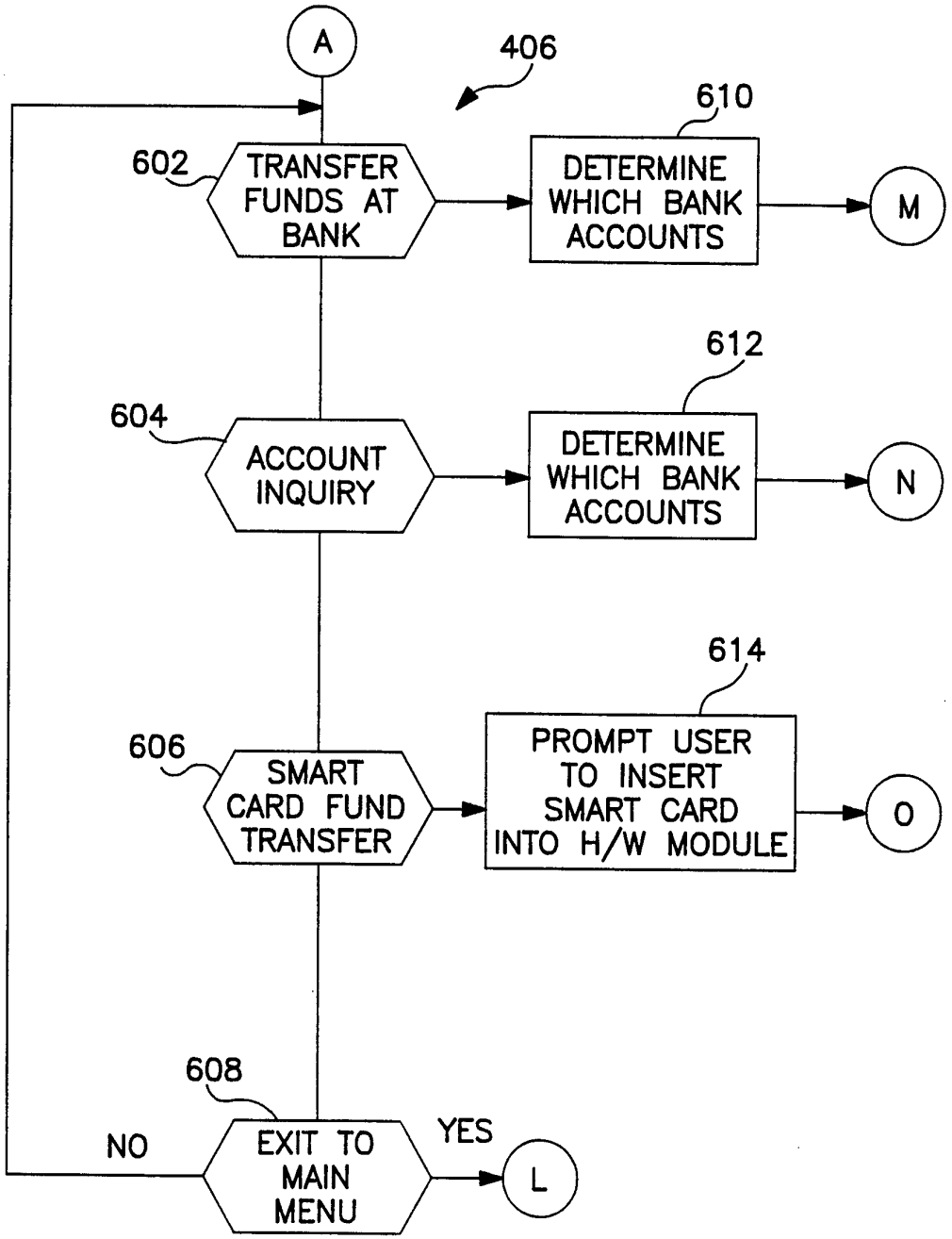
A
406
610
602
TRANSFER FUNDS AT BANK
DETERMINE WHICH BANK ACCOUNTS
M
612
604
ACCOUNT INQUIRY
DETERMINE WHICH BANK ACCOUNTS
N
614
606
SMART CARD FUND TRANSFER
PROMPT USER TO INSERT SMART CARD INTO H/W MODULE
O
608
NO
EXIT TO MAIN MENU
YES
L

FIG. 6

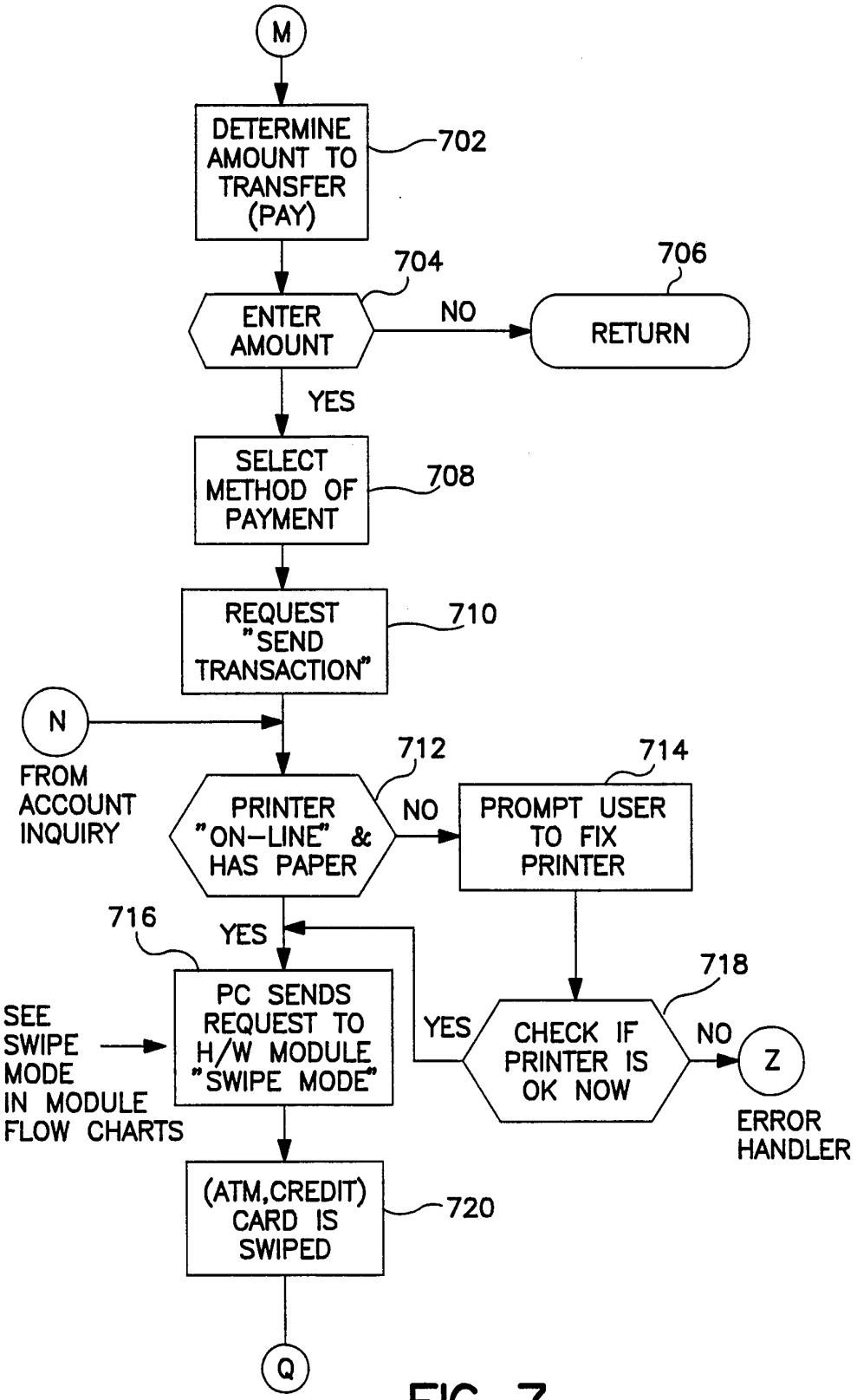
M
DETERMINE AMOUNT TO TRANSFER (PAY)
702
704
ENTER AMOUNT
NO
706
RETURN
YES
SELECT METHOD OF PAYMENT
708
REQUEST "SEND TRANSACTION"
710
N
FROM ACCOUNT INQUIRY
712
PRINTER "ON-LINE" & HAS PAPER
NO
714
PROMPT USER TO FIX PRINTER
716
YES
PC SENDS REQUEST TO H/W MODULE "SWIPE MODE"
SEE SWIPE MODE IN MODULE FLOW CHARTS
YES
718
CHECK IF PRINTER IS OK NOW
NO
Z
ERROR HANDLER
(ATM,CREDIT) CARD IS SWIPED
720
Q

FIG. 7

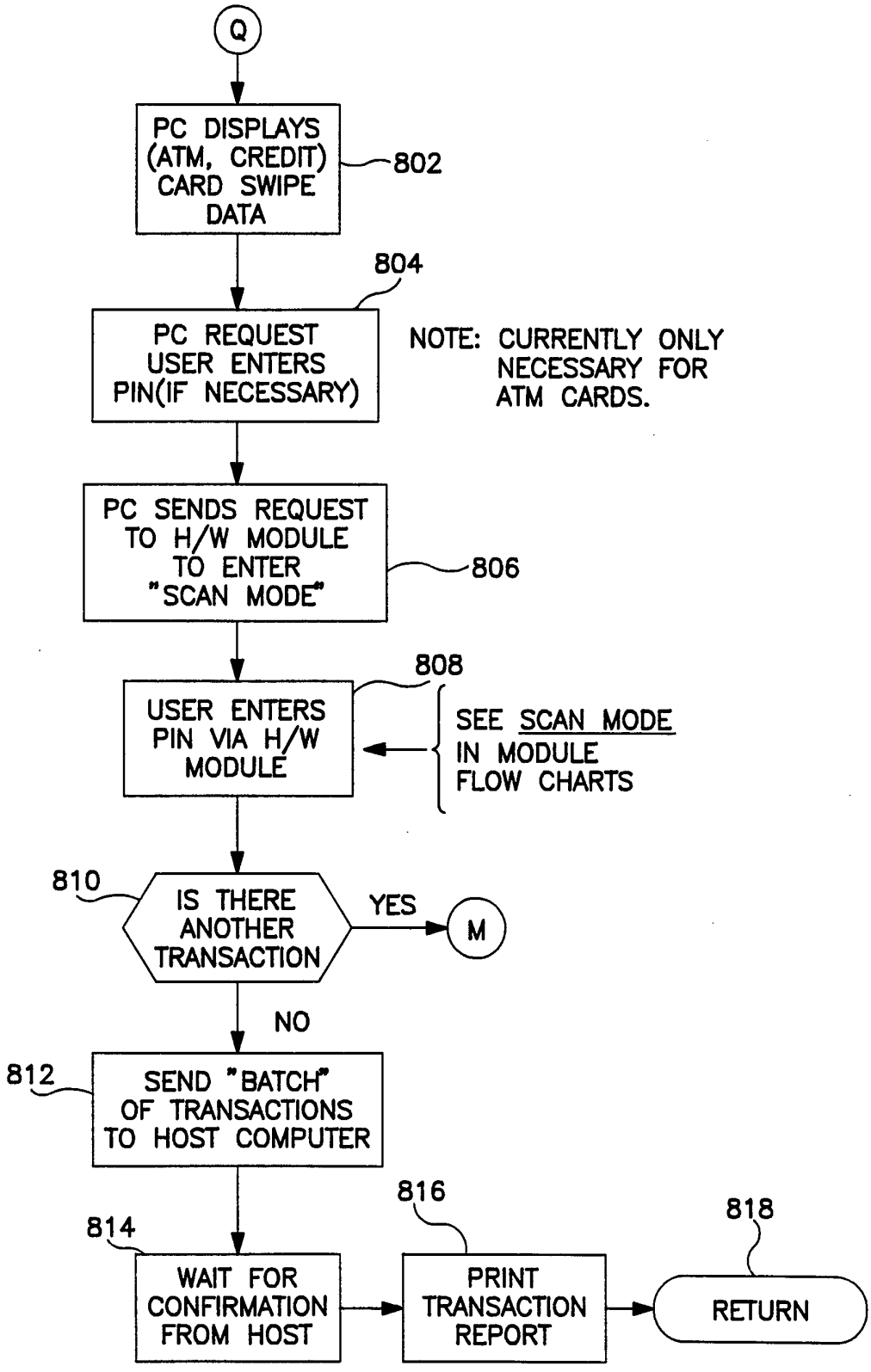
Q
PC DISPLAYS (ATM, CREDIT) CARD SWIPE DATA
802
804
PC REQUEST USER ENTERS PIN(IF NECESSARY)
NOTE: CURRENTLY ONLY NECESSARY FOR ATM CARDS.
PC SENDS REQUEST TO H/W MODULE TO ENTER "SCAN MODE"
806
808
USER ENTERS PIN VIA H/W MODULE
SEE SCAN MODE IN MODULE FLOW CHARTS
810
IS THERE ANOTHER TRANSACTION
YES
M
NO
812
SEND "BATCH" OF TRANSACTIONS TO HOST COMPUTER
814
816
818
WAIT FOR CONFIRMATION FROM HOST
PRINT TRANSACTION REPORT
RETURN

FIG. 8

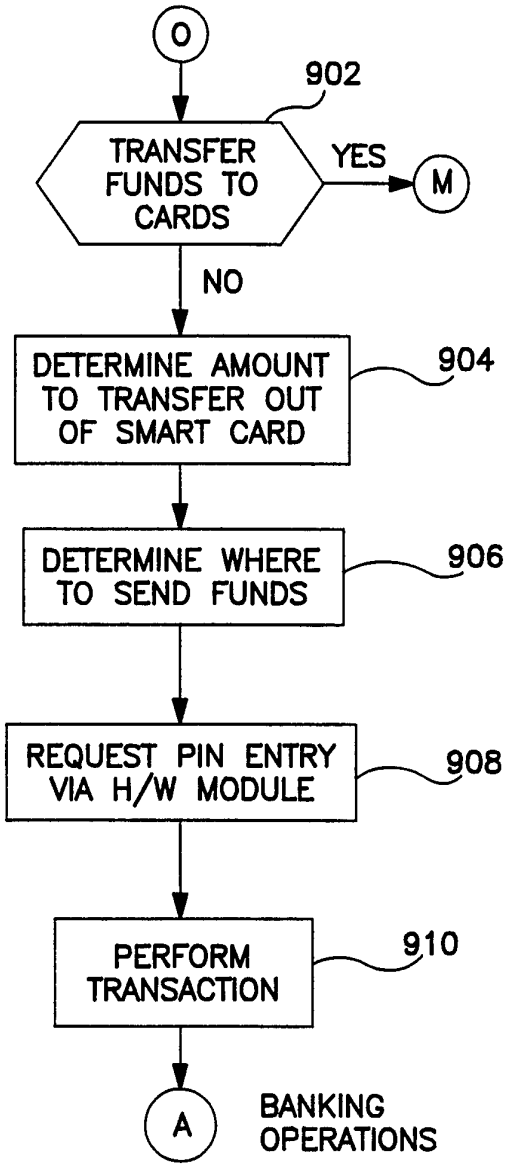
O
902
TRANSFER FUNDS TO CARDS
YES
M
NO
DETERMINE AMOUNT TO TRANSFER OUT OF SMART CARD
904
DETERMINE WHERE TO SEND FUNDS
906
REQUEST PIN ENTRY VIA H/W MODULE
908
PERFORM TRANSACTION
910
A
BANKING OPERATIONS

FIG. 9

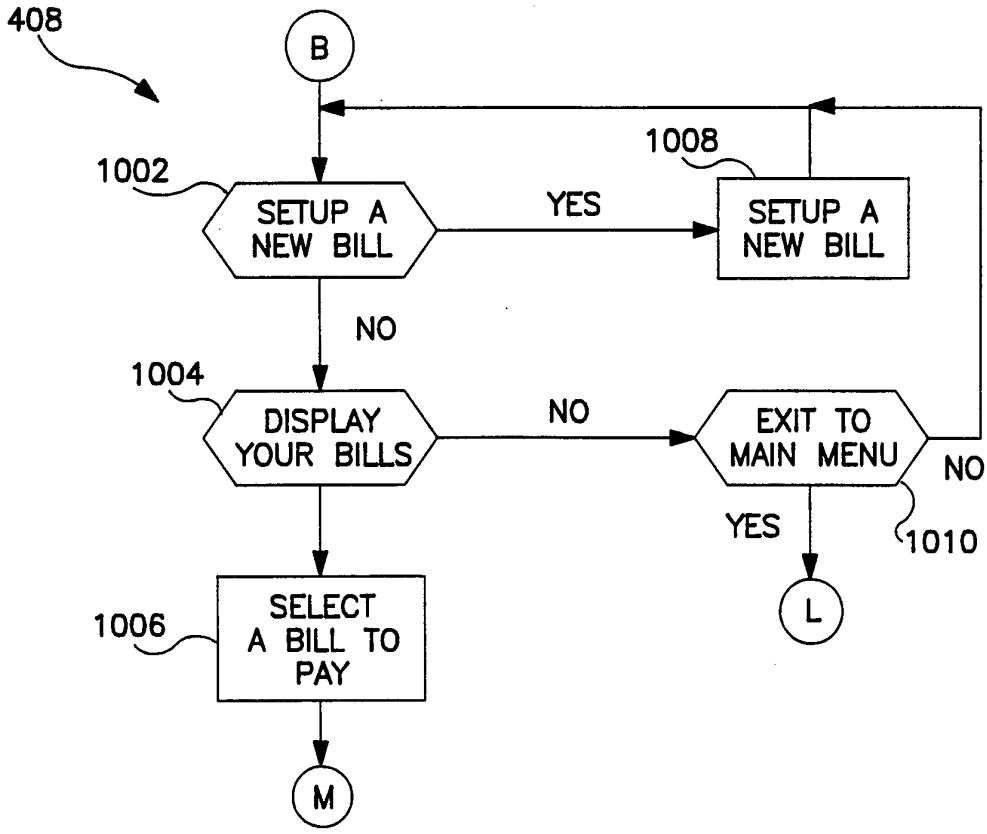
408
B
1002
SETUP A NEW BILL
YES
1008
SETUP A NEW BILL
NO
1004
DISPLAY YOUR BILLS
NO
EXIT TO MAIN MENU
NO
YES
1010
L
1006
SELECT A BILL TO PAY
M

FIG. 10

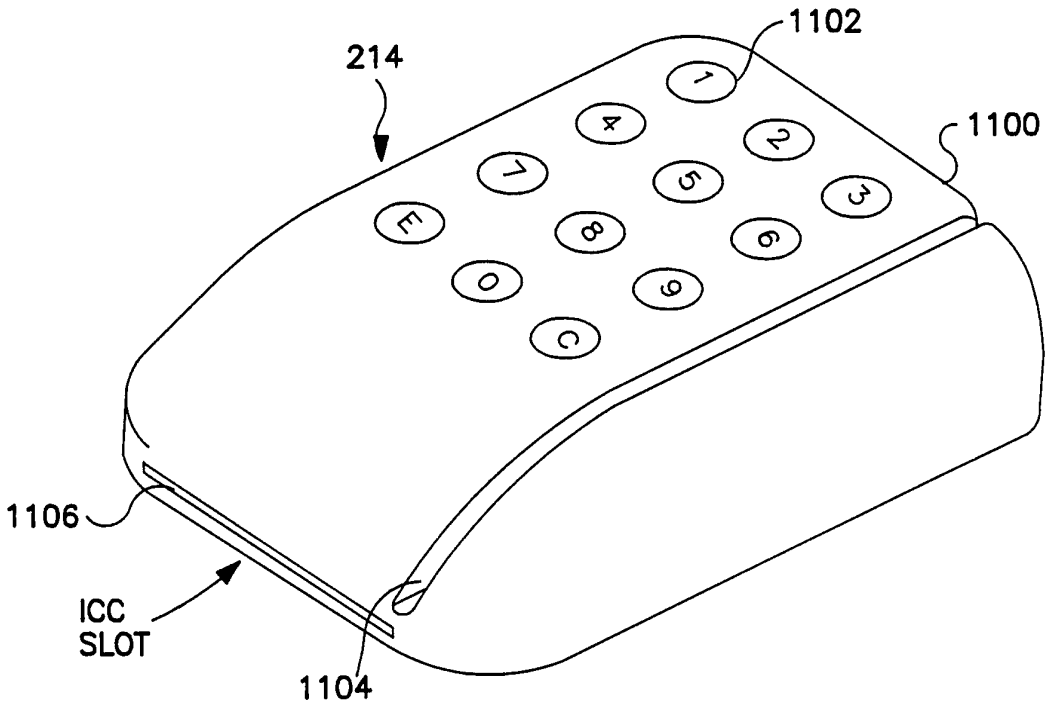
214
1102
1100
1106
ICC SLOT
1104

FIG. 11

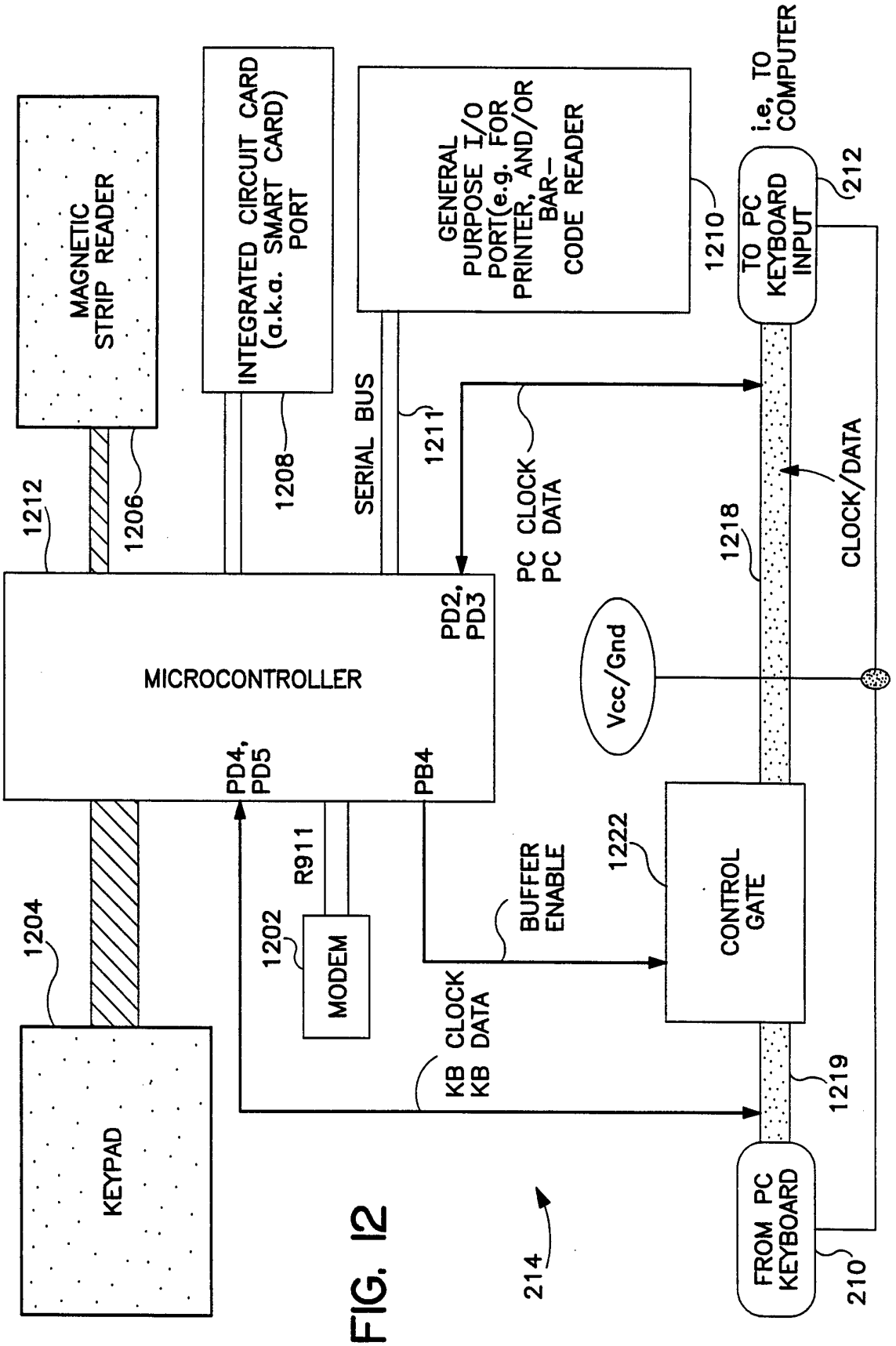
MAGNETIC STRIP READER
INTEGRATED CIRCUIT CARD (a.k.a. SMART CARD) PORT
GENERAL PURPOSE I/O PORT(e.g. FOR PRINTER, AND/OR BAR-CODE READER
i.e, TO COMPUTER
TO PC KEYBOARD INPUT
1210
212
1212
1206
1208
SERIAL BUS
1211
PC CLOCK
PC DATA
CLOCK/DATA
1218
PD2, PD3
MICROCONTROLLER
Vcc/Gnd
PD4, PD5
PB4
1204
R911
1202
MODEM
BUFFER ENABLE
1222
CONTROL GATE
KB CLOCK
KB DATA
1219
KEYPAD
FROM PC KEYBOARD
210
214

FIG. 12

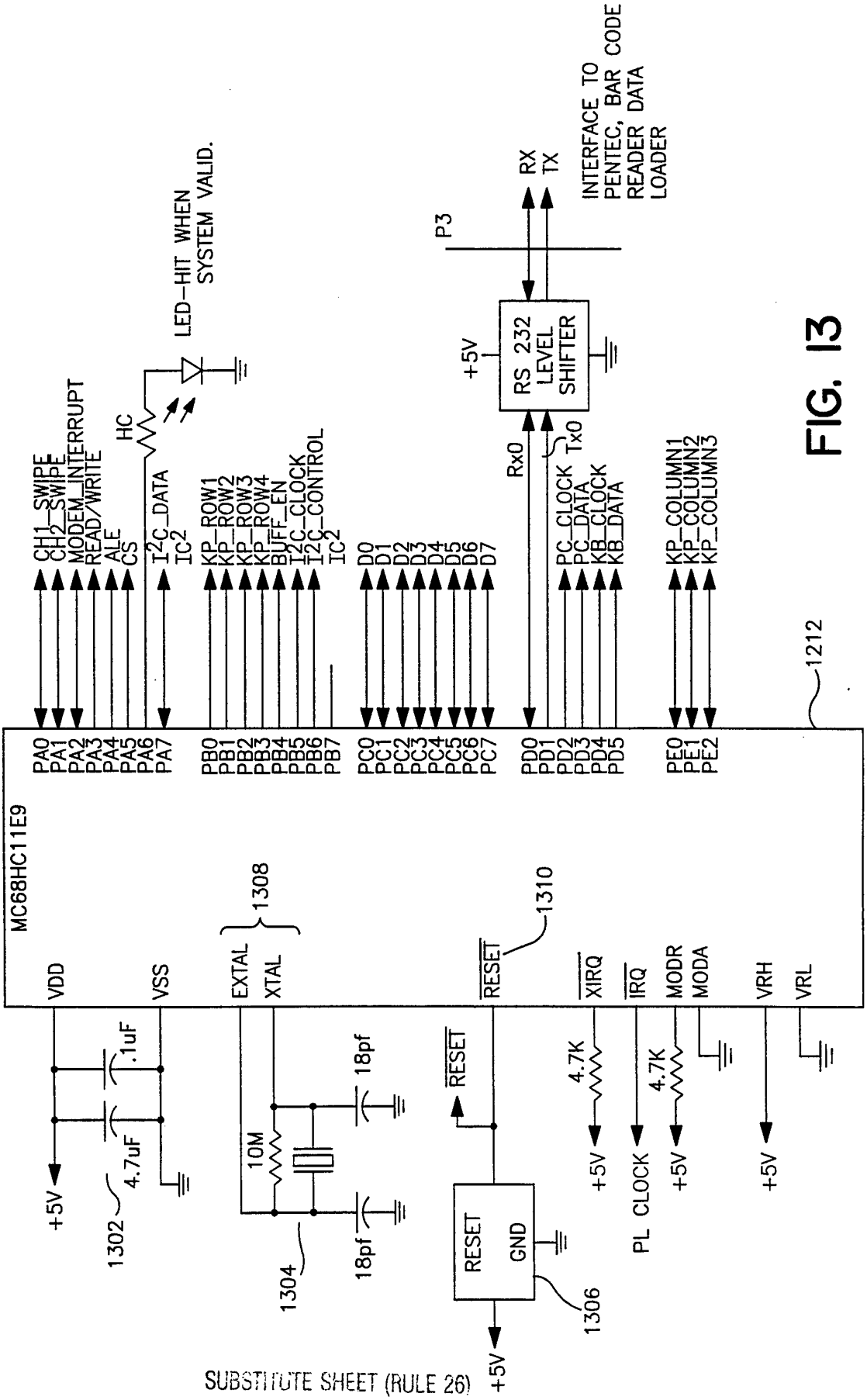
MC68HC11E9
VDD
VSS
EXTAL
XTAL
RESET
XIRQ
IRQ
MODR
MODA
VRH
VRL
1308
1310
1212
PA0 PA1 PA2 PA3 PA4 PA5 PA6 PA7
PB0 PB1 PB2 PB3 PB4 PB5 PB6 PB7
PC0 PC1 PC2 PC3 PC4 PC5 PC6 PC7
PD0 PD1 PD2 PD3 PD4 PD5
PE0 PE1 PE2
CH1_SWIPE
CH2_SWIPE
MODEM_INTERRUPT
READ/WRITE
ALE
CS
I2C_DATA
IC2
HC
LED-HIT WHEN SYSTEM VALID.
KP_ROW1
KP_ROW2
KP_ROW3
KP_ROW4
BUFF_EN
I2C_CLOCK
I2C_CONTROL
IC2
D0 D1 D2 D3 D4 D5 D6 D7
Rx0
Tx0
PC_CLOCK
PC_DATA
KB_CLOCK
KB_DATA
KP_COLUMN1
KP_COLUMN2
KP_COLUMN3
P3
RX
TX
INTERFACE TO PENTEC, BAR CODE READER DATA LOADER
+5V
RS 232 LEVEL SHIFTER
.1uF
4.7uF
1302
10M
18pf
18pf
1304
RESET
GND
1306
4.7K
4.7K
PL CLOCK
+5V

FIG. 13

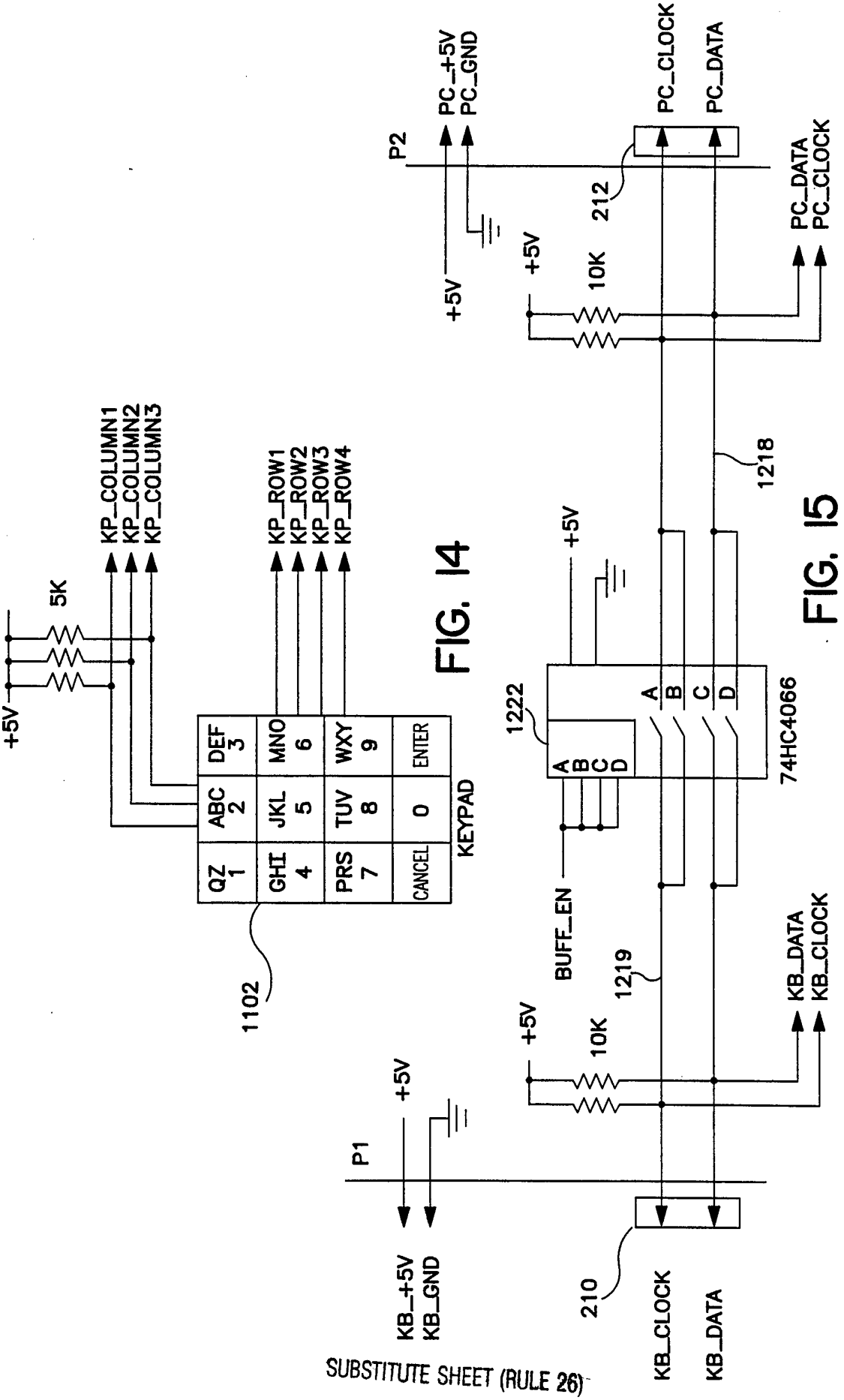
KP_COLUMN1
KP_COLUMN2
KP_COLUMN3
KP_ROW1
KP_ROW2
KP_ROW3
KP_ROW4
5K
+5V
DEF 3
MNO 6
WXY 9
ENTER
ABC 2
JKL 5
TUV 8
0
QZ 1
GHI 4
PRS 7
CANCEL
KEYPAD
1102
P2
PC_+5V
PC_GND
PC_CLOCK
PC_DATA
212
10K
1218
1222
74HC4066
A
B
C
D
BUFF_EN
1219
KB_DATA
KB_CLOCK
P1
KB_+5V
KB_GND
210

FIG. 14

FIG. 15

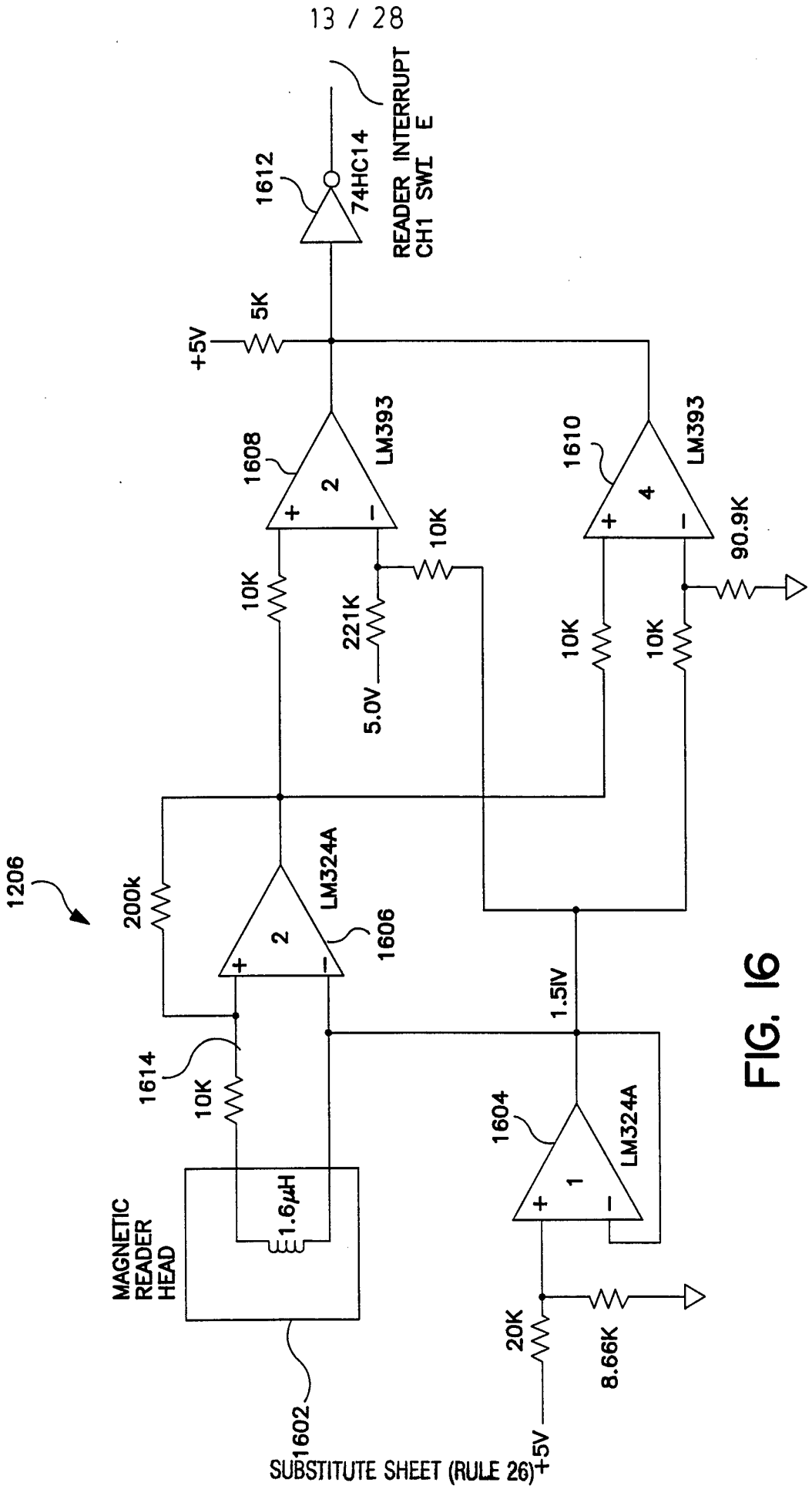
1206
1612
74HC14
READER INTERRUPT
CH1 SWI E
+5V
5K
1608
LM393
2
1610
LM393
4
10K
90.9K
10K
221K
5.0V
10K
10K
10K
200k
LM324A
2
1606
1.5IV
1614
10K
1604
LM324A
1
MAGNETIC
READER
HEAD
1.6μH
20K
8.66K
1602
+5V

FIG. 16

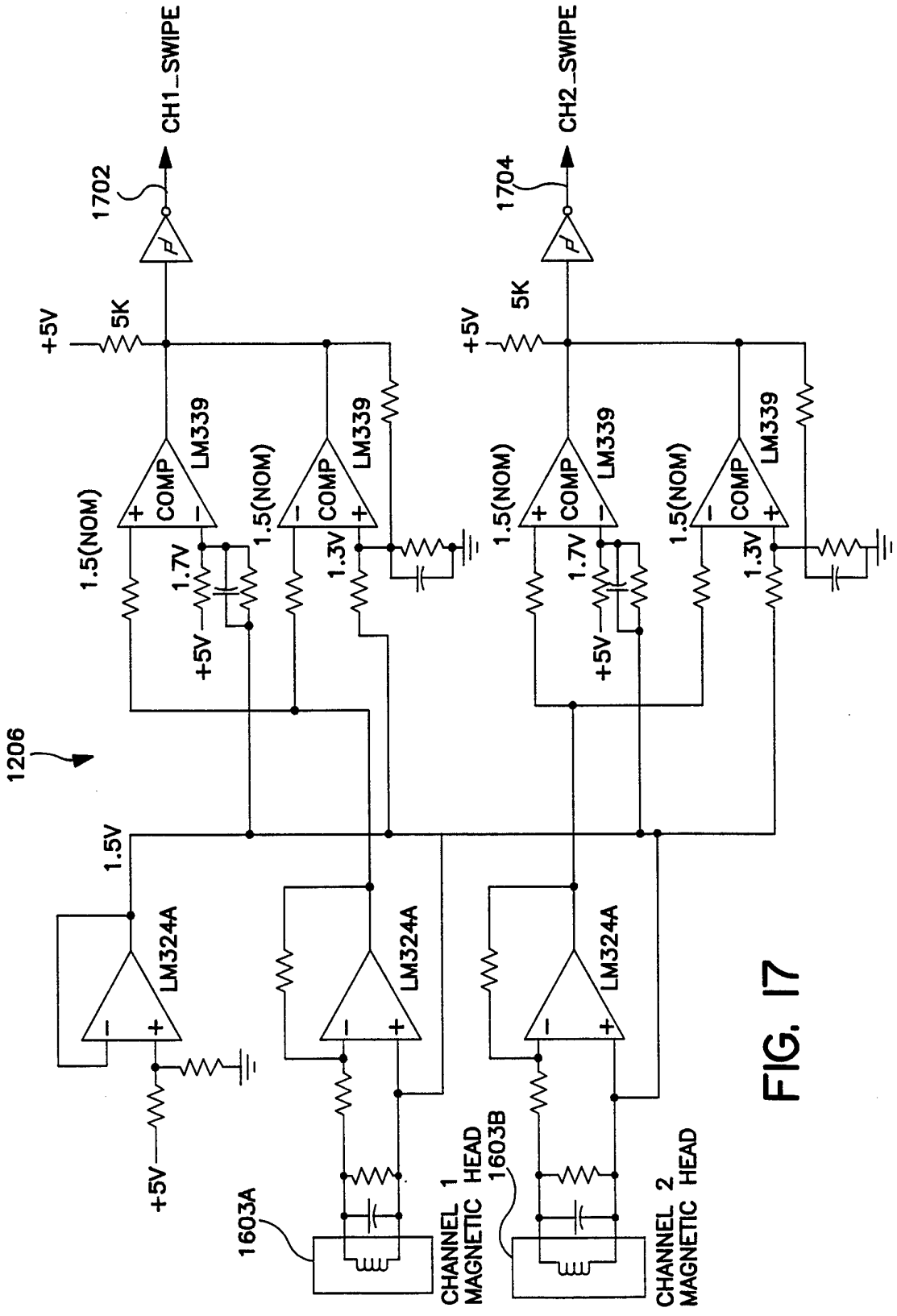
CH1_SWIPE
CH2_SWIPE
1702
1704
+5V
5K
LM339
COMP
1.5(NOM)
1.7V
1.3V
1206
1.5V
LM324A
1603A
1603B
CHANNEL 1 MAGNETIC HEAD
CHANNEL 2 MAGNETIC HEAD

FIG. 17

1802

SECTOR	LABEL
1804	CURRENT MODE REGISTER
1806	PREVIOUS MODE REGISTER
1808	PC INTERFACE TEMPORARY BUFFER
1810	DATA OUTPUT BUFFER
1812	COMMAND REGISTER
1814	PIN ENTRY BUFFER
1816	ENCRYPTED PIN HOLDING AREA
1818	PERSONAL ACCOUNT NUMBER
1820	CHANNEL 1 CARD SWIPE DATA BUFFER
1822	CHANNEL 2 CARD SWIPE DATA BUFFER
1824	SWIPE TIMEOUT COUNTER
1826	SWIPE TIMER DATA
1828	SWIPE BUFFER FULL FLAG
1830	CURRENT KEY POINTER
1832	KEY POINTER SHIFT REGISTER
1834	CRYPTO REGISTER
1836	KEY REGISTER

FIG. 18

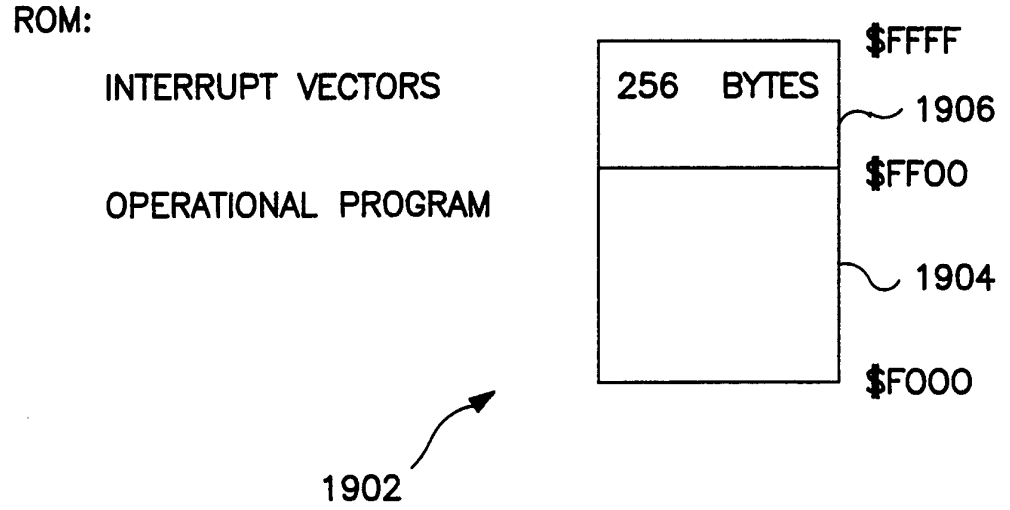

FIG. 19

SECTOR	LABEL	
2004	FUTURE ENCRYPTION KEYS	USED
2006	INITIAL KEY SERIAL NUMBER	FOR
2008	ENCRYPTION COUNTER	ENCRYPTION

2002

FIG. 20

FIG. 21

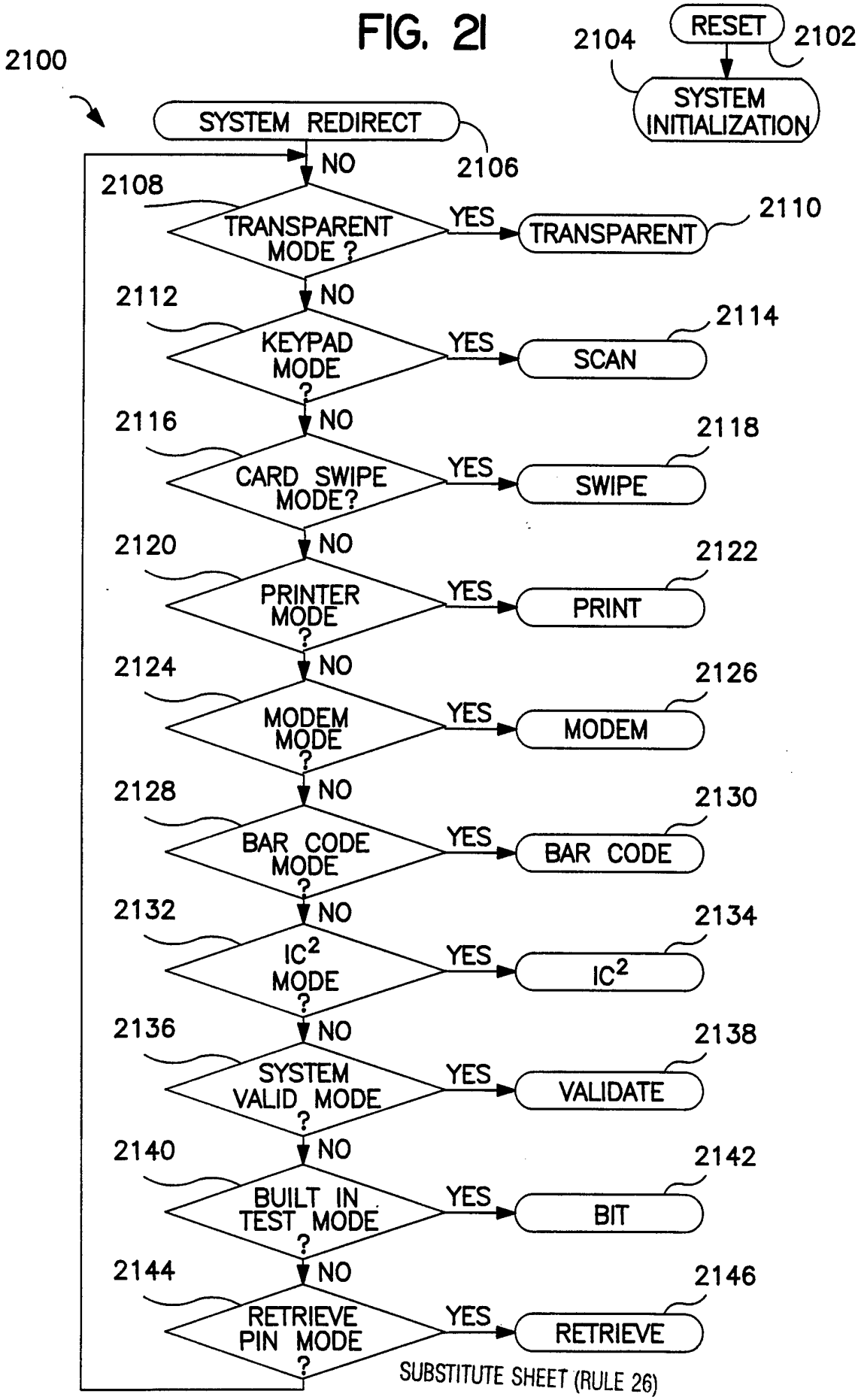
2100
RESET
2102
2104
SYSTEM INITIALIZATION
SYSTEM REDIRECT
2106
NO
2108
TRANSPARENT MODE ?
YES
TRANSPARENT
2110
NO
2112
KEYPAD MODE ?
YES
SCAN
2114
NO
2116
CARD SWIPE MODE?
YES
SWIPE
2118
NO
2120
PRINTER MODE ?
YES
PRINT
2122
NO
2124
MODEM MODE ?
YES
MODEM
2126
NO
2128
BAR CODE MODE ?
YES
BAR CODE
2130
NO
2132
IC2 MODE ?
YES
IC2
2134
NO
2136
SYSTEM VALID MODE ?
YES
VALIDATE
2138
NO
2140
BUILT IN TEST MODE ?
YES
BIT
2142
NO
2144
RETRIEVE PIN MODE ?
YES
RETRIEVE
2146

FIG. 22

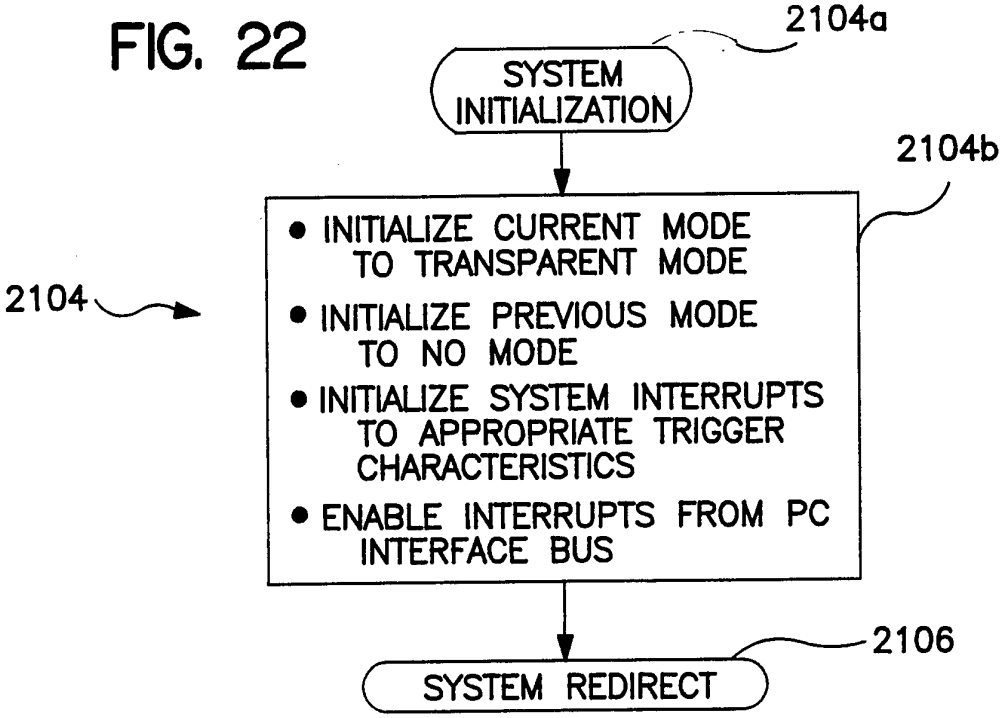
2104a
SYSTEM INITIALIZATION
2104b
• INITIALIZE CURRENT MODE TO TRANSPARENT MODE
• INITIALIZE PREVIOUS MODE TO NO MODE
• INITIALIZE SYSTEM INTERRUPTS TO APPROPRIATE TRIGGER CHARACTERISTICS
• ENABLE INTERRUPTS FROM PC INTERFACE BUS
2104
2106
SYSTEM REDIRECT

FIG. 24

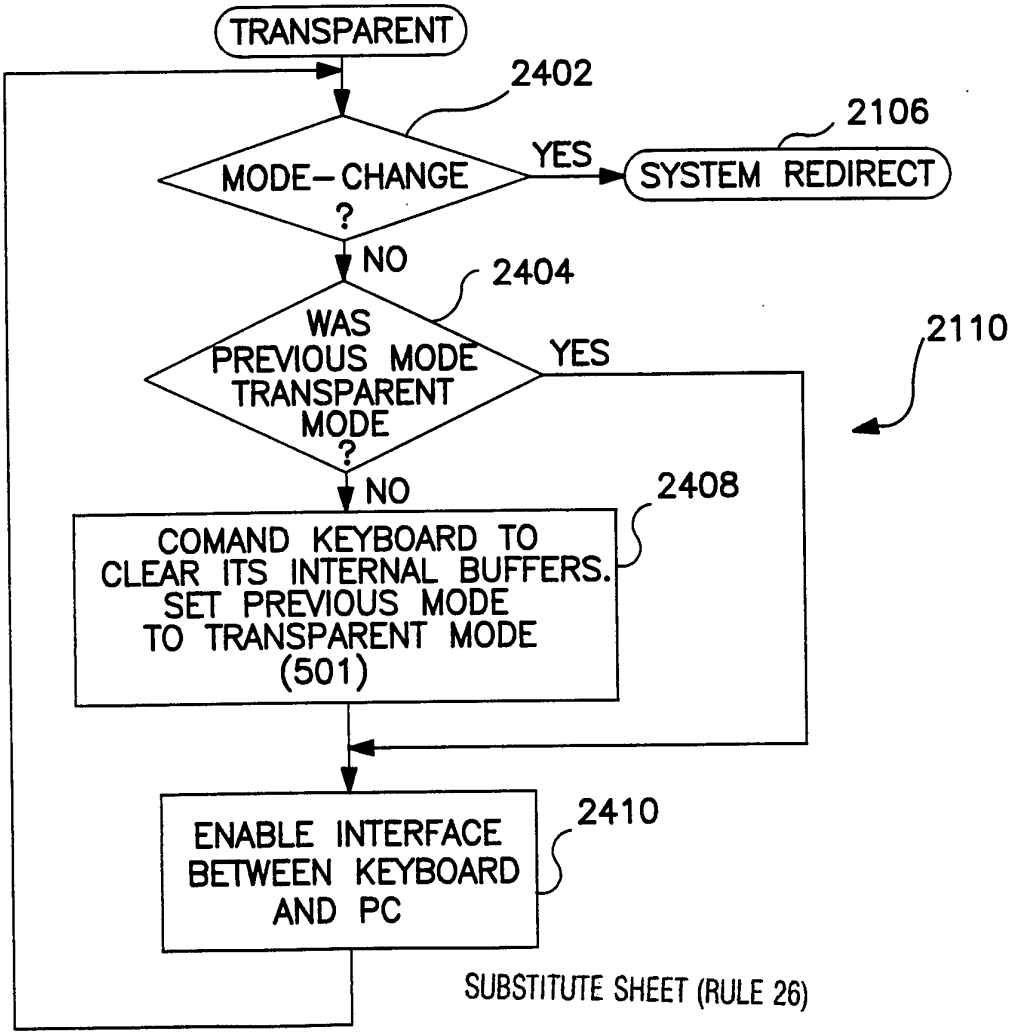
TRANSPARENT
2402
MODE-CHANGE ?
YES
2106
SYSTEM REDIRECT
NO
2404
WAS PREVIOUS MODE TRANSPARENT MODE ?
YES
2110
NO
2408
COMAND KEYBOARD TO CLEAR ITS INTERNAL BUFFERS. SET PREVIOUS MODE TO TRANSPARENT MODE (501)
ENABLE INTERFACE BETWEEN KEYBOARD AND PC
2410

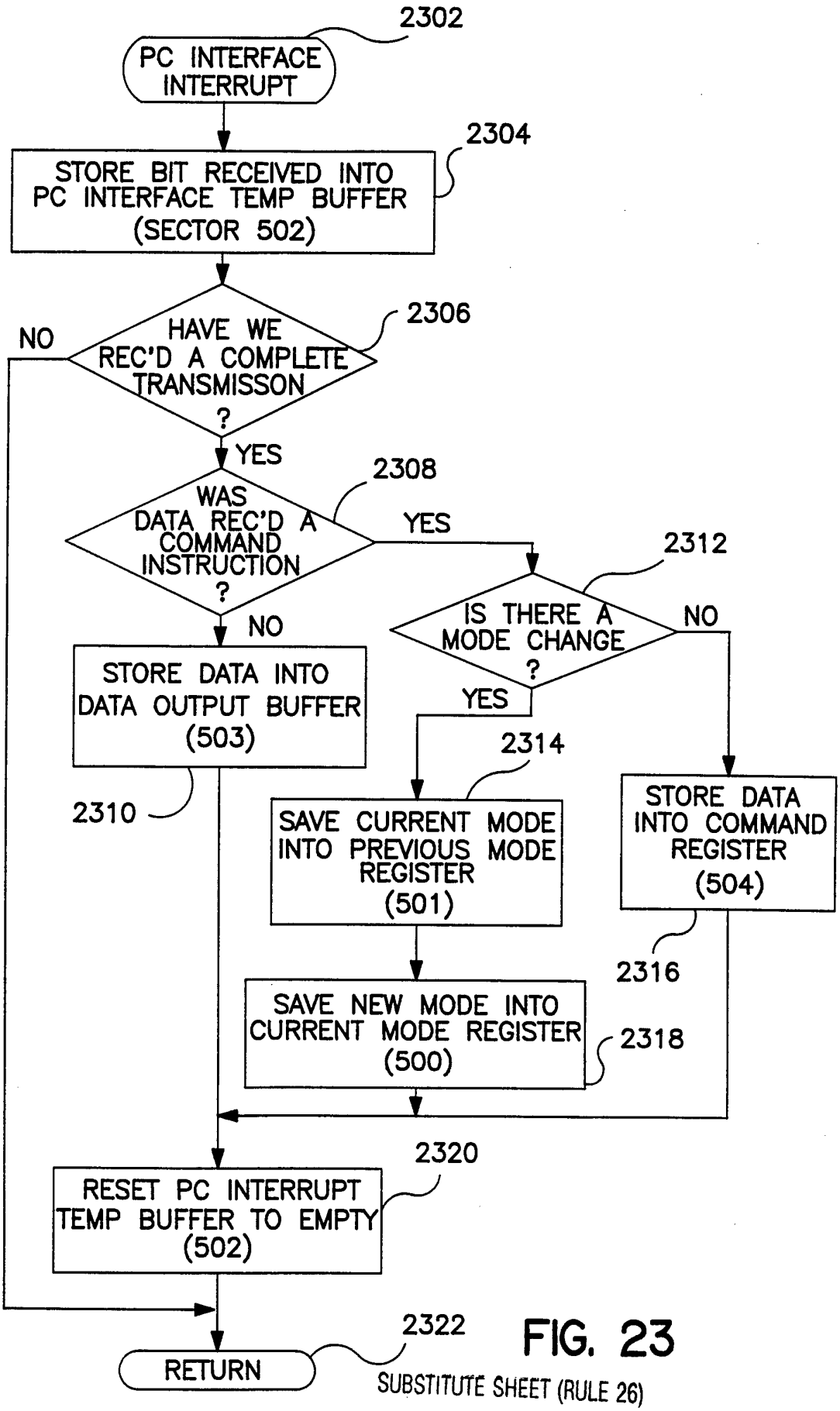
2302
PC INTERFACE INTERRUPT
2304
STORE BIT RECEIVED INTO PC INTERFACE TEMP BUFFER (SECTOR 502)
2306
HAVE WE REC'D A COMPLETE TRANSMISSON ?
NO
YES
2308
WAS DATA REC'D A COMMAND INSTRUCTION ?
YES
NO
2312
IS THERE A MODE CHANGE ?
NO
YES
STORE DATA INTO DATA OUTPUT BUFFER (503)
2310
2314
SAVE CURRENT MODE INTO PREVIOUS MODE REGISTER (501)
STORE DATA INTO COMMAND REGISTER (504)
2316
SAVE NEW MODE INTO CURRENT MODE REGISTER (500)
2318
2320
RESET PC INTERRUPT TEMP BUFFER TO EMPTY (502)
2322
RETURN

FIG. 23

FIG. 25

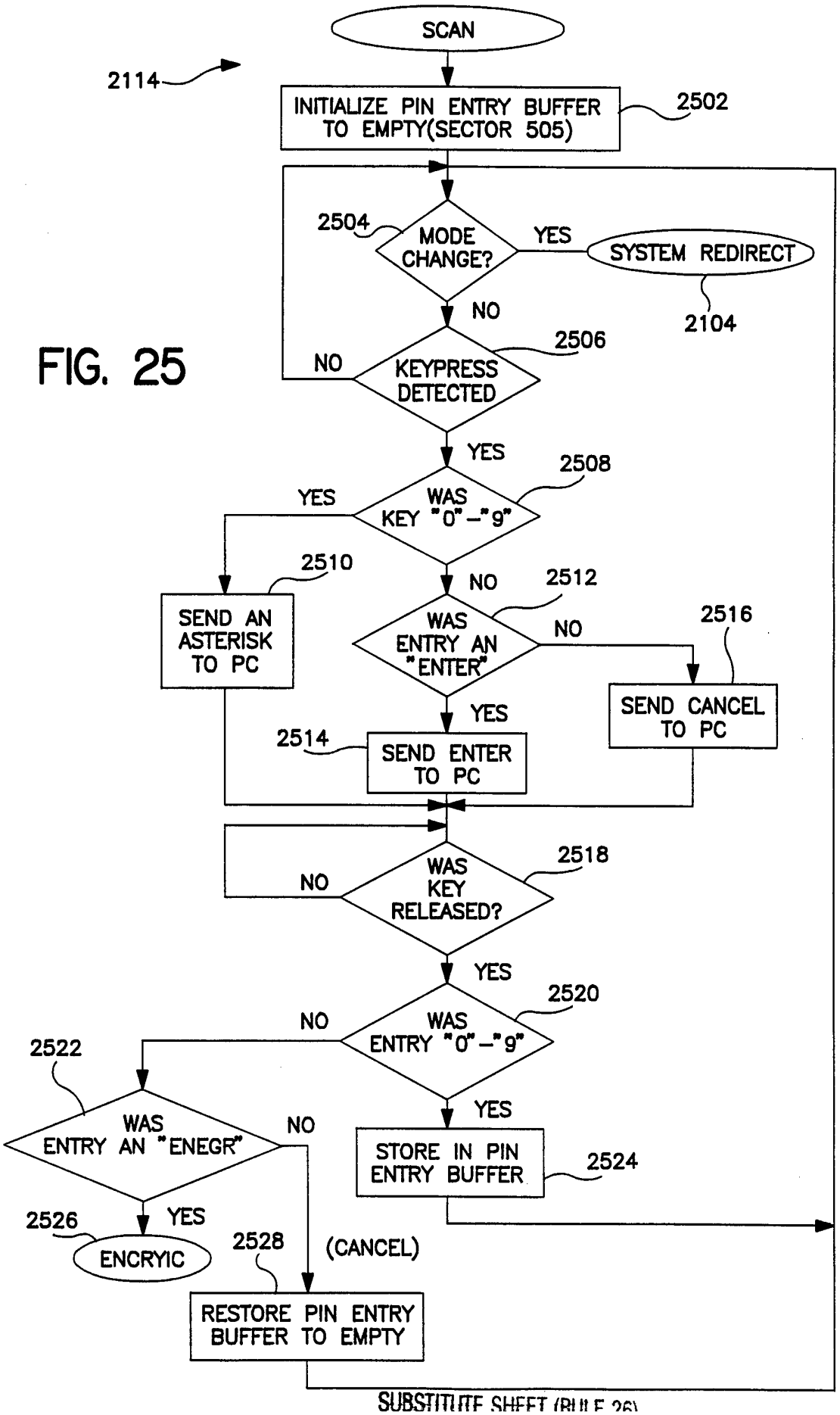
SCAN
2114
INITIALIZE PIN ENTRY BUFFER TO EMPTY(SECTOR 505)
2502
2504
MODE CHANGE?
YES
SYSTEM REDIRECT
2104
NO
2506
NO
KEYPRESS DETECTED
YES
2508
YES
WAS KEY "0"–"9"
2510
SEND AN ASTERISK TO PC
NO
2512
WAS ENTRY AN "ENTER"
NO
2516
SEND CANCEL TO PC
YES
2514
SEND ENTER TO PC
2518
NO
WAS KEY RELEASED?
YES
2520
NO
WAS ENTRY "0"–"9"
2522
YES
WAS ENTRY AN "ENEGR"
NO
STORE IN PIN ENTRY BUFFER
2524
2526
YES
ENCRYIC
2528
(CANCEL)
RESTORE PIN ENTRY BUFFER TO EMPTY

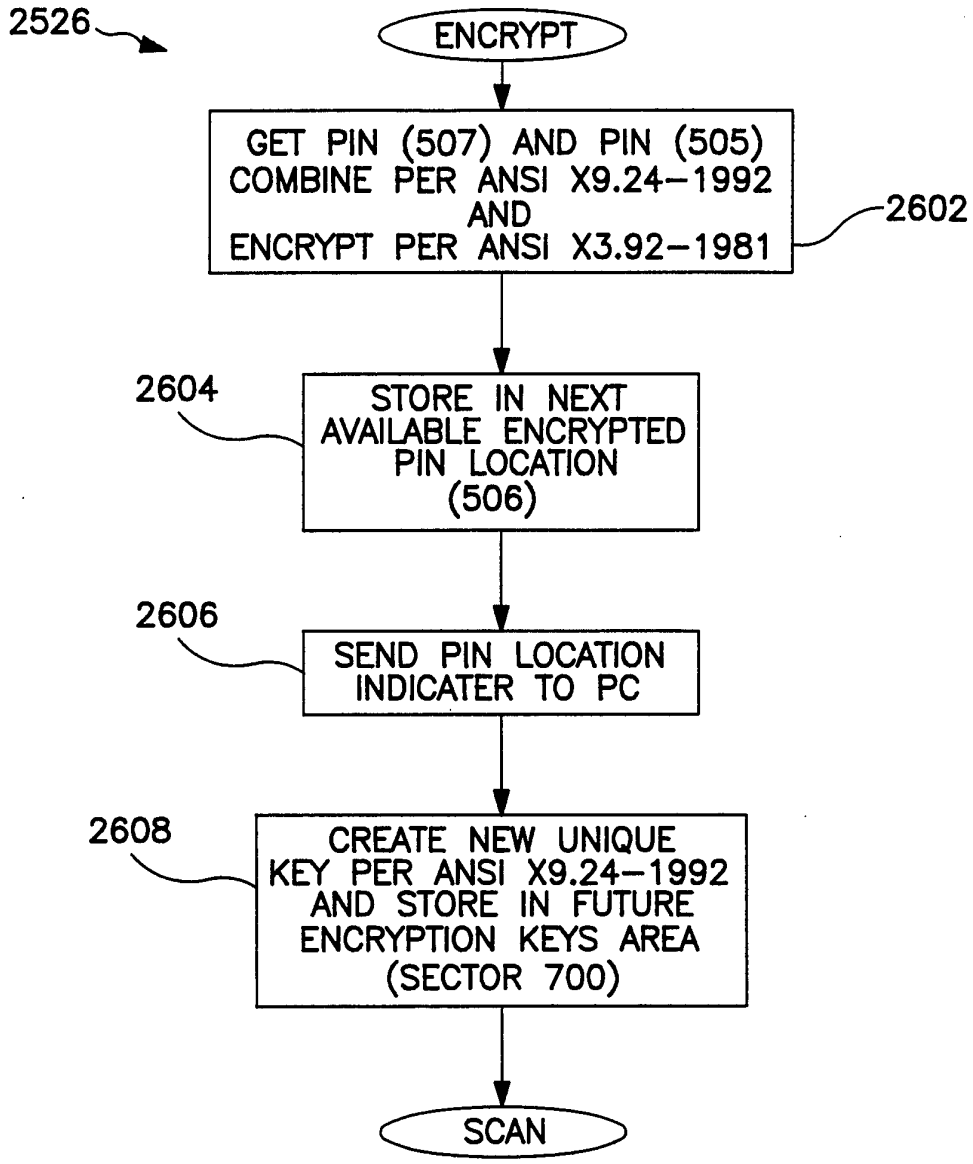
2526
ENCRYPT
GET PIN (507) AND PIN (505)
COMBINE PER ANSI X9.24-1992
AND
ENCRYPT PER ANSI X3.92-1981
2602
2604
STORE IN NEXT
AVAILABLE ENCRYPTED
PIN LOCATION
(506)
2606
SEND PIN LOCATION
INDICATER TO PC
2608
CREATE NEW UNIQUE
KEY PER ANSI X9.24-1992
AND STORE IN FUTURE
ENCRYPTION KEYS AREA
(SECTOR 700)
SCAN

FIG. 26

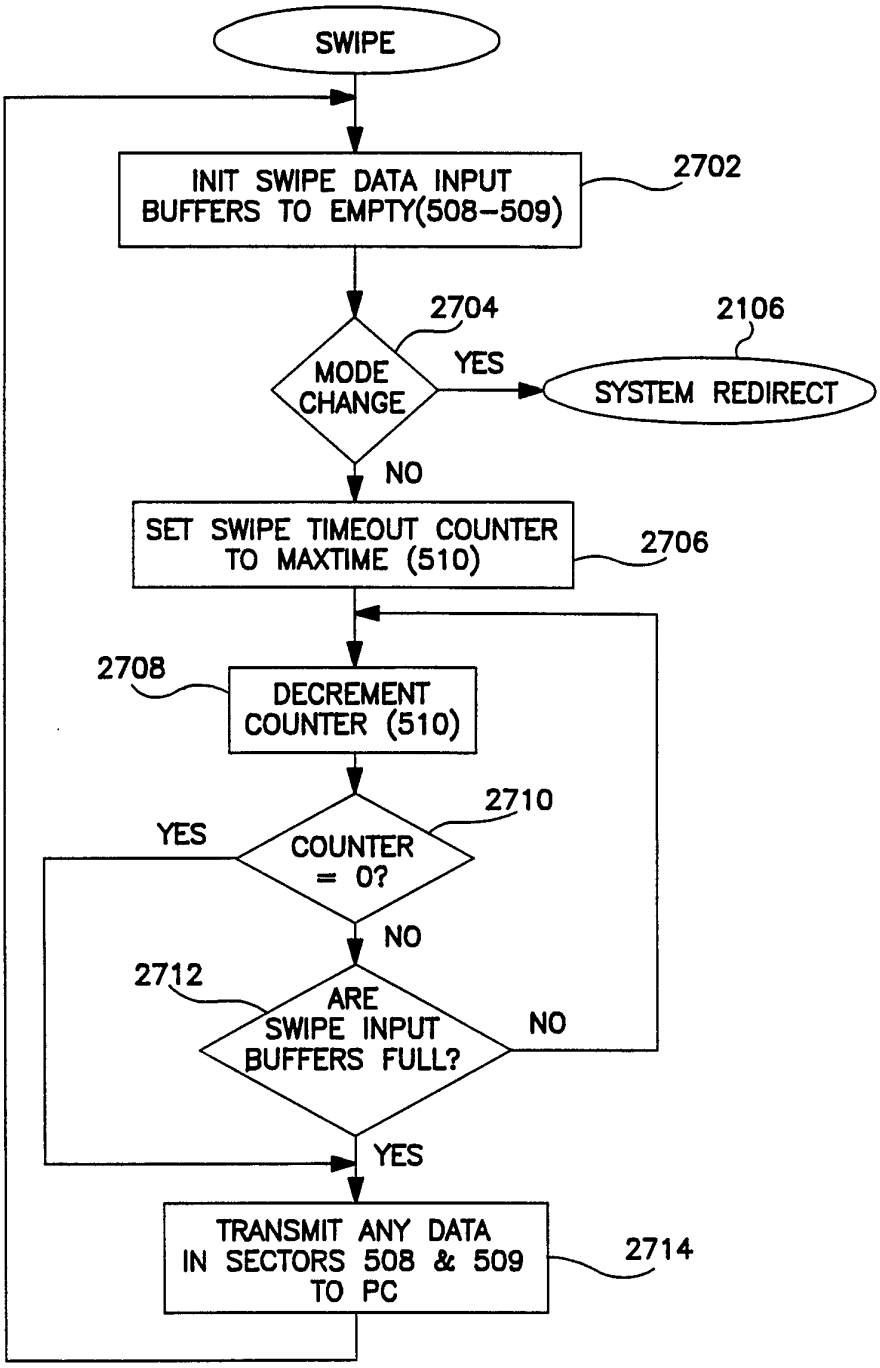
SWIPE
INIT SWIPE DATA INPUT BUFFERS TO EMPTY(508–509)
2702
2704
MODE CHANGE
YES
2106
SYSTEM REDIRECT
NO
SET SWIPE TIMEOUT COUNTER TO MAXTIME (510)
2706
2708
DECREMENT COUNTER (510)
2710
YES
COUNTER = 0?
NO
2712
ARE SWIPE INPUT BUFFERS FULL?
NO
YES
TRANSMIT ANY DATA IN SECTORS 508 & 509 TO PC
2714

FIG. 27

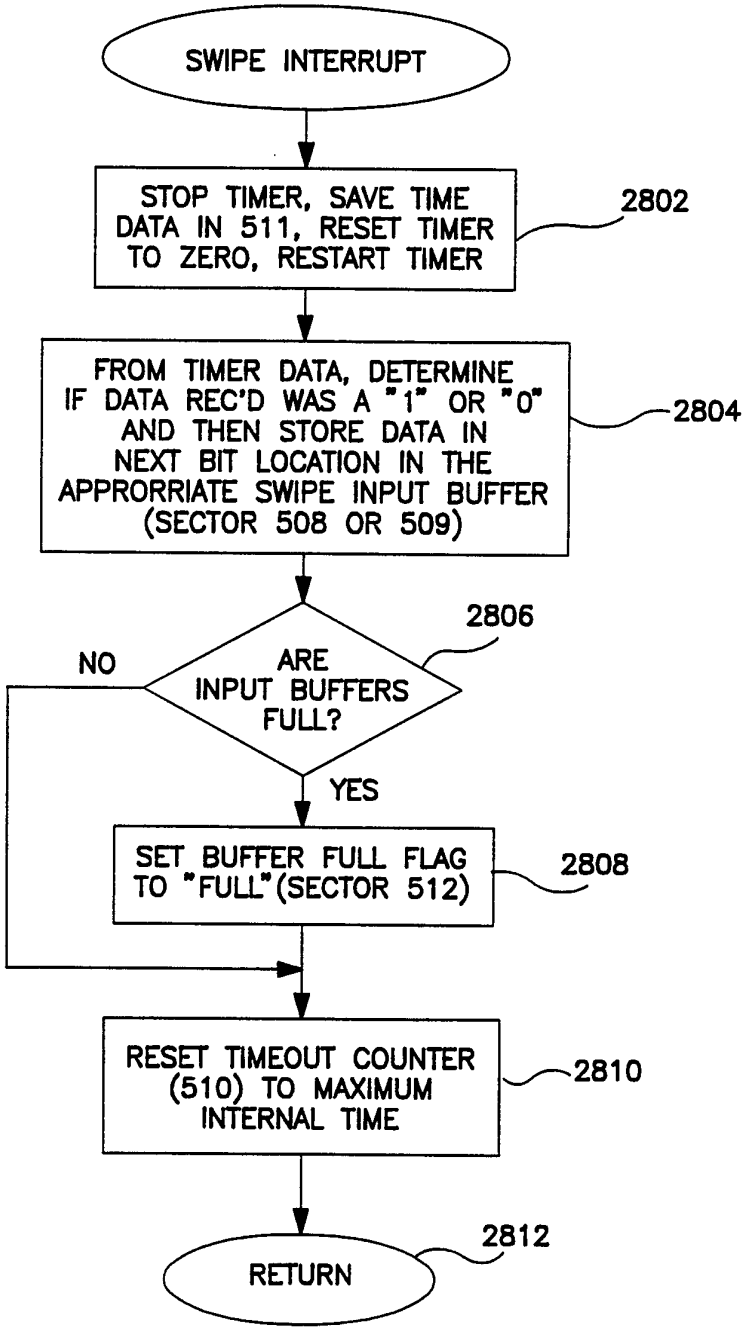
SWIPE INTERRUPT
STOP TIMER, SAVE TIME DATA IN 511, RESET TIMER TO ZERO, RESTART TIMER
2802
FROM TIMER DATA, DETERMINE IF DATA REC'D WAS A "1" OR "0" AND THEN STORE DATA IN NEXT BIT LOCATION IN THE APPRORRIATE SWIPE INPUT BUFFER (SECTOR 508 OR 509)
2804
2806
NO
ARE INPUT BUFFERS FULL?
YES
SET BUFFER FULL FLAG TO "FULL"(SECTOR 512)
2808
RESET TIMEOUT COUNTER (510) TO MAXIMUM INTERNAL TIME
2810
2812
RETURN

FIG. 28

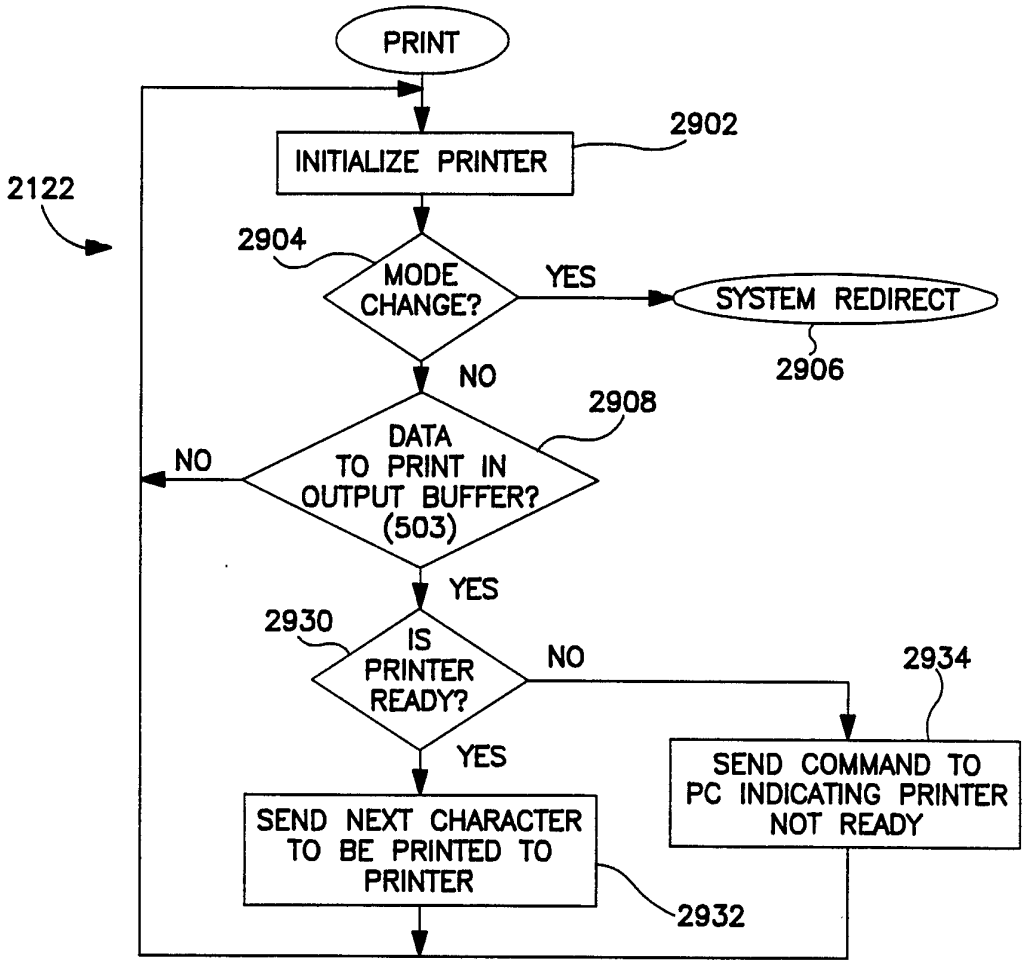
PRINT
INITIALIZE PRINTER
2902
2122
2904
MODE CHANGE?
YES
SYSTEM REDIRECT
2906
NO
2908
DATA TO PRINT IN OUTPUT BUFFER? (503)
NO
YES
2930
IS PRINTER READY?
NO
2934
YES
SEND COMMAND TO PC INDICATING PRINTER NOT READY
SEND NEXT CHARACTER TO BE PRINTED TO PRINTER
2932

FIG. 29

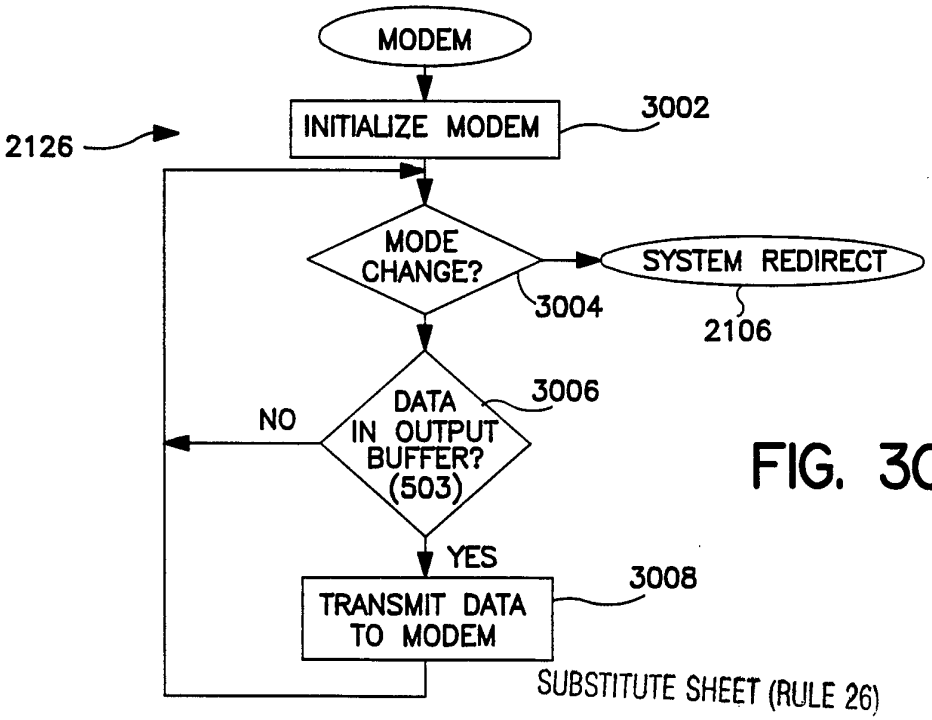
MODEM
INITIALIZE MODEM
3002
2126
MODE CHANGE?
SYSTEM REDIRECT
3004
2106
3006
DATA IN OUTPUT BUFFER? (503)
NO
YES
3008
TRANSMIT DATA TO MODEM

FIG. 30

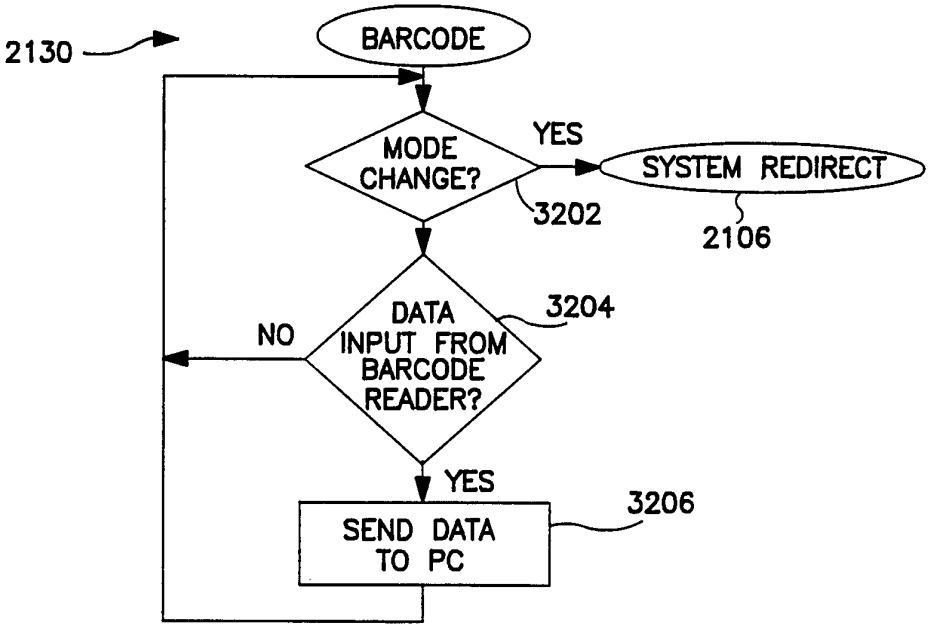
2130
BARCODE
MODE CHANGE?
YES
SYSTEM REDIRECT
3202
2106
DATA INPUT FROM BARCODE READER?
3204
NO
YES
SEND DATA TO PC
3206

FIG. 31

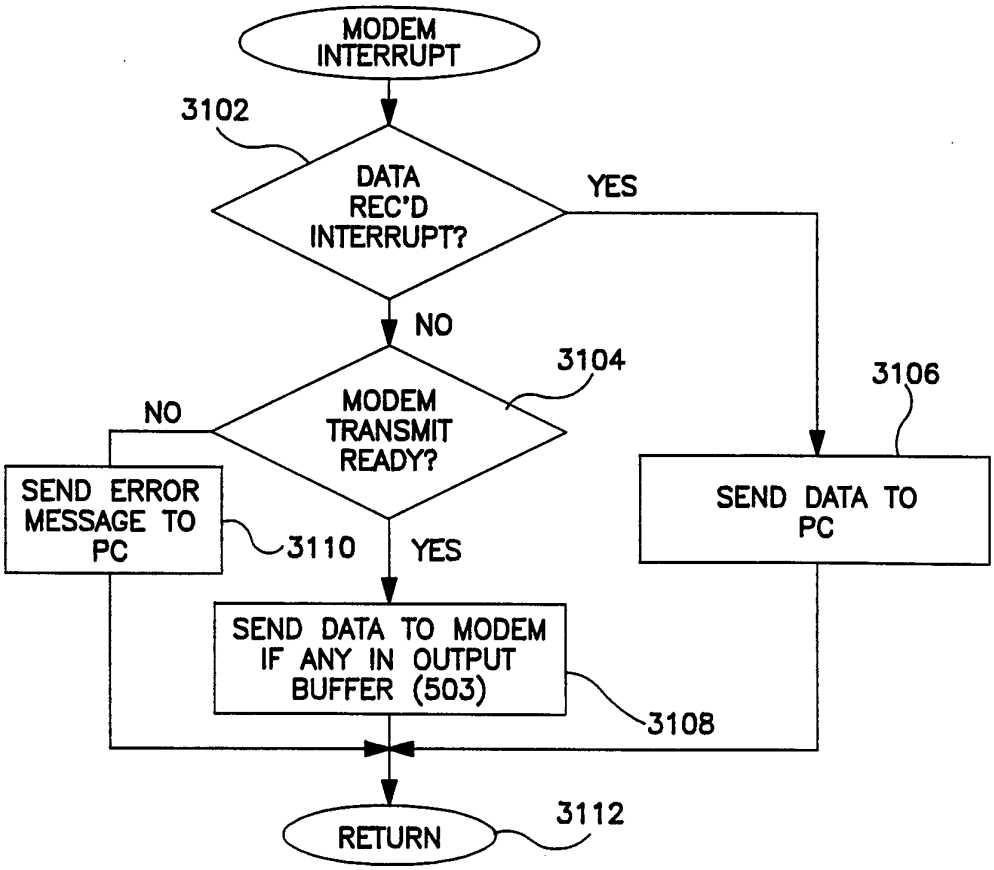
MODEM INTERRUPT
3102
DATA REC'D INTERRUPT?
YES
NO
3104
MODEM TRANSMIT READY?
NO
3106
SEND ERROR MESSAGE TO PC
3110
YES
SEND DATA TO PC
SEND DATA TO MODEM IF ANY IN OUTPUT BUFFER (503)
3108
RETURN
3112

FIG. 32

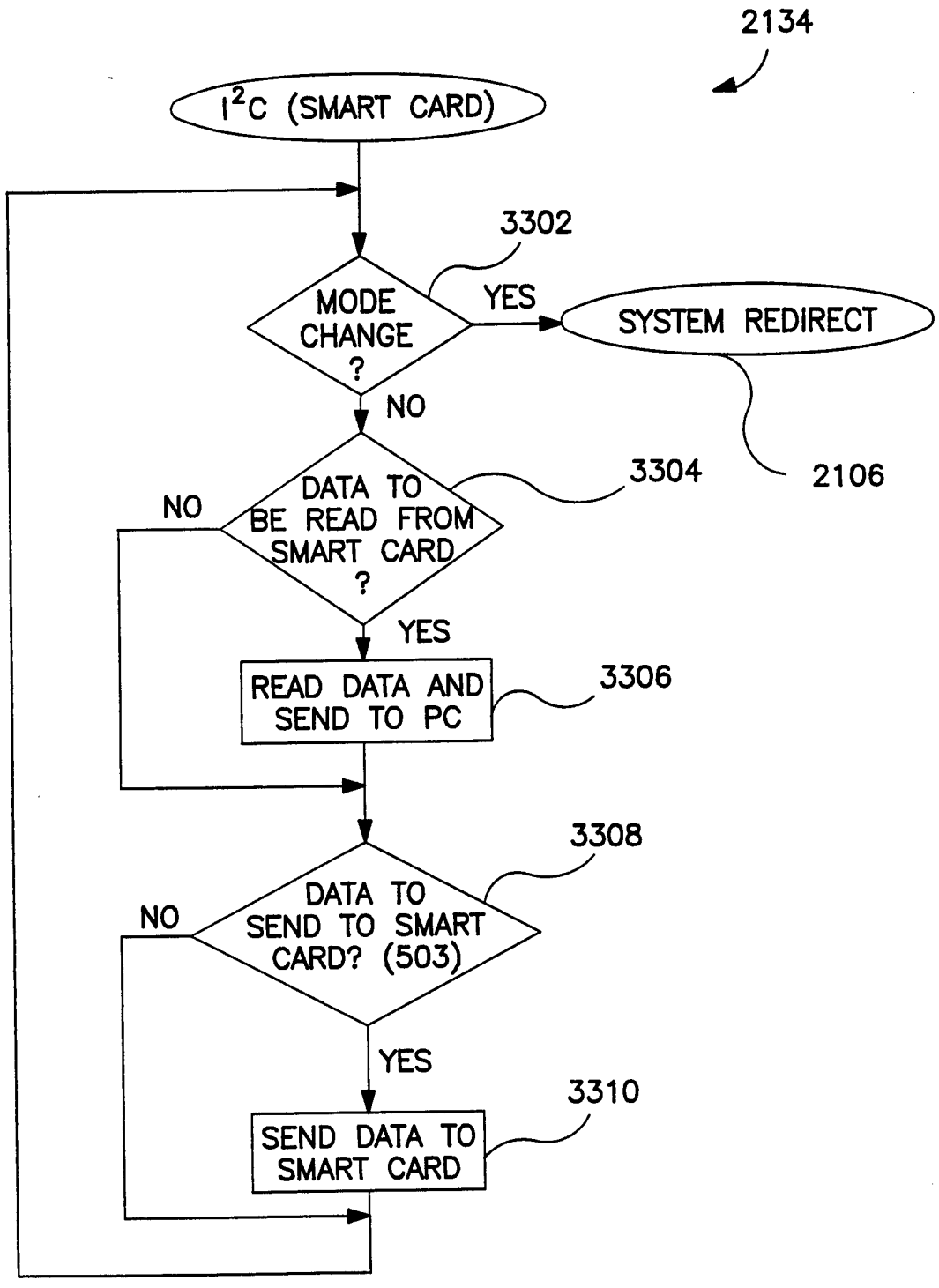
2134
I²C (SMART CARD)
3302
MODE CHANGE ?
YES
SYSTEM REDIRECT
2106
NO
3304
DATA TO BE READ FROM SMART CARD ?
NO
YES
READ DATA AND SEND TO PC
3306
3308
DATA TO SEND TO SMART CARD? (503)
NO
YES
3310
SEND DATA TO SMART CARD

FIG. 33

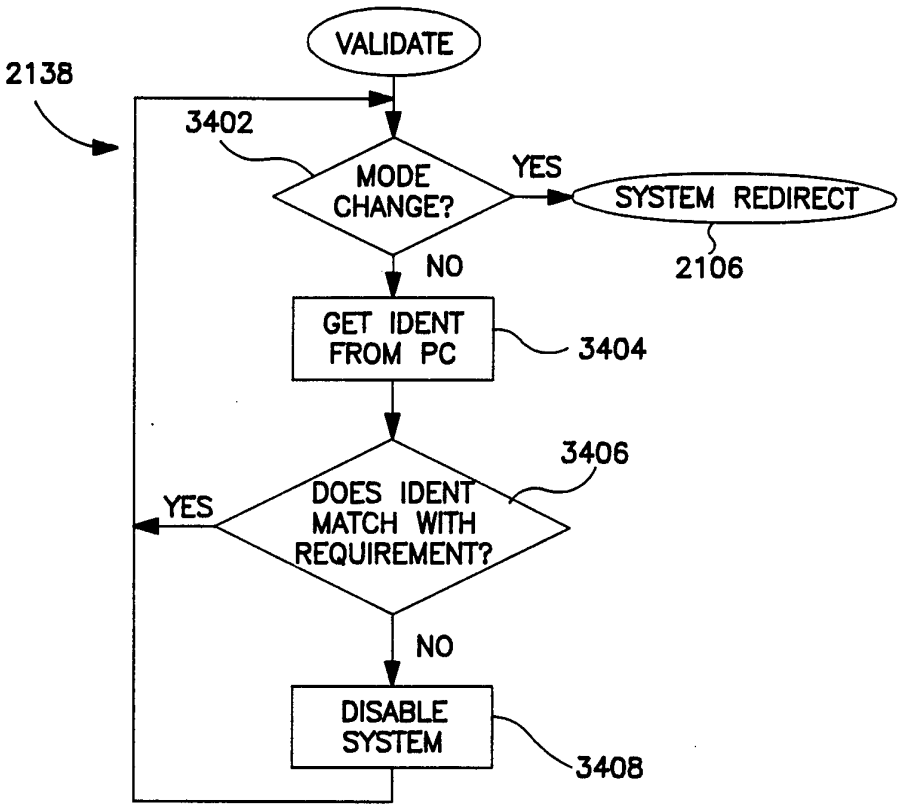
VALIDATE
2138
3402
MODE CHANGE?
YES
SYSTEM REDIRECT
2106
NO
GET IDENT FROM PC
3404
3406
DOES IDENT MATCH WITH REQUIREMENT?
YES
NO
DISABLE SYSTEM
3408

FIG. 34

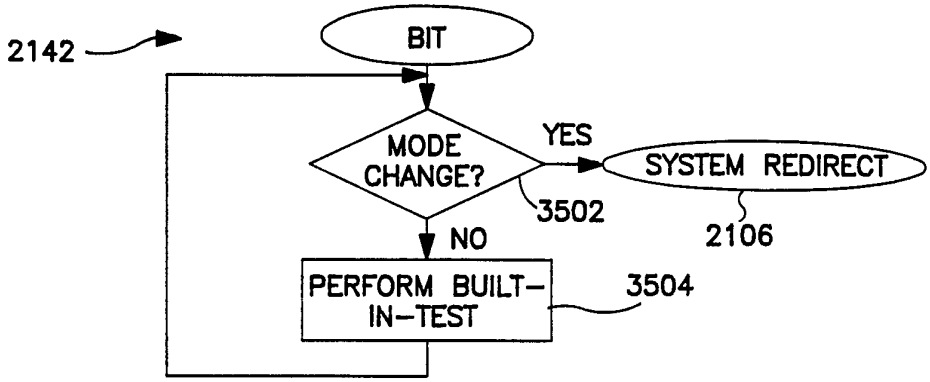
2142
BIT
MODE CHANGE?
YES
SYSTEM REDIRECT
3502
2106
NO
PERFORM BUILT-IN-TEST
3504

FIG. 35

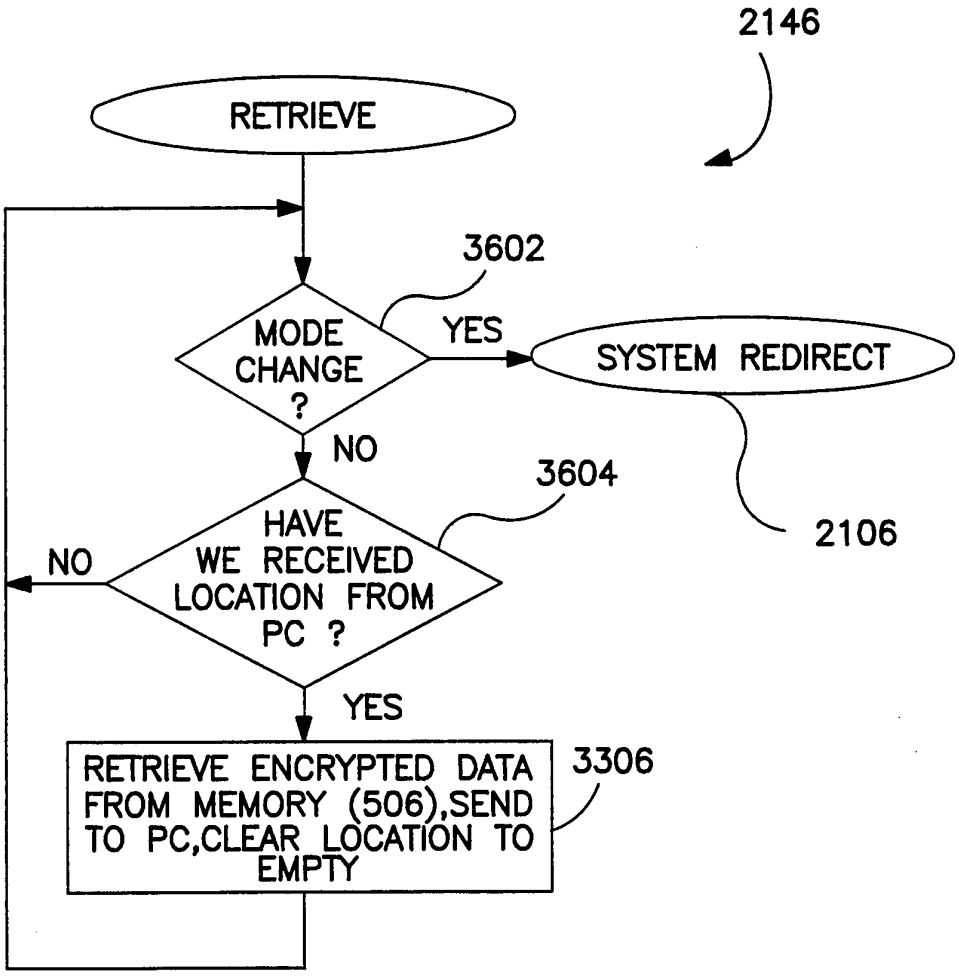
2146
RETRIEVE
3602
MODE CHANGE ?
YES
SYSTEM REDIRECT
NO
2106
3604
HAVE WE RECEIVED LOCATION FROM PC ?
NO
YES
RETRIEVE ENCRYPTED DATA FROM MEMORY (506),SEND TO PC,CLEAR LOCATION TO EMPTY
3306

FIG. 36

INTERNATIONAL SEARCH REPORT

International application No.
PCT/US95/03578

A. CLASSIFICATION OF SUBJECT MATTER

IPC(6) :HO4K 1/00; HO4L 9/00, 17/02
US CL :380/24, 25, 52
According to International Patent Classification (IPC) or to both national classification and IPC

B. FIELDS SEARCHED

Minimum documentation searched (classification system followed by classification symbols)

U.S. : 380/24, 25, 52
380/23

Documentation searched other than minimum documentation to the extent that such documents are included in the fields searched

Electronic data base consulted during the international search (name of data base and, where practicable, search terms used)

APS Messenger (PC, PERSONAL, MODEM, KEYBOARD, PORT)

C. DOCUMENTS CONSIDERED TO BE RELEVANT

Category*	Citation of document, with indication, where appropriate, of the relevant passages	Relevant to claim No.
E, Y	US, A, 5,406,624 (TULPAN) 11 April 1995, Note SU.	6, 21,
X -- Y	US, A, 4,707,592 (WARE) 17 November 1987	1, 2, 5-10, 14-18, 20 --- 3, 11-13
X -- Y	US, A, 4,123,747 (LANCTO ET AL) 31 October 1978	1, 2, 5-10, 14-18, 20 --- 3, 11-13

☐ Further documents are listed in the continuation of Box C. ☐ See patent family annex.

*	Special categories of cited documents:	"T"	later document published after the international filing date or priority date and not in conflict with the application but cited to understand the principle or theory underlying the invention
"A"	document defining the general state of the art which is not considered to be part of particular relevance	"X"	document of particular relevance; the claimed invention cannot be considered novel or cannot be considered to involve an inventive step when the document is taken alone
"E"	earlier document published on or after the international filing date	"Y"	document of particular relevance; the claimed invention cannot be considered to involve an inventive step when the document is combined with one or more other such documents, such combination being obvious to a person skilled in the art
"L"	document which may throw doubts on priority claim(s) or which is cited to establish the publication date of another citation or other special reason (as specified)	"&"	document member of the same patent family
"O"	document referring to an oral disclosure, use, exhibition or other means		
"P"	document published prior to the international filing date but later than the priority date claimed		

Date of the actual completion of the international search 26 MAY 1995	Date of mailing of the international search report 08 JUN 1995
Name and mailing address of the ISA/US Commissioner of Patents and Trademarks Box PCT Washington, D.C. 20231 Facsimile No. (703) 305-3230	Authorized officer STEPHEN C. BUCZINSKI Telephone No. (703) 308-0476

Form PCT/ISA/210 (second sheet)(July 1992)*